STATE	PROJECT NUMBER	SHEET NO.	TOTAL SHEETS
GA.	BR000-0001-00(216)	173	322

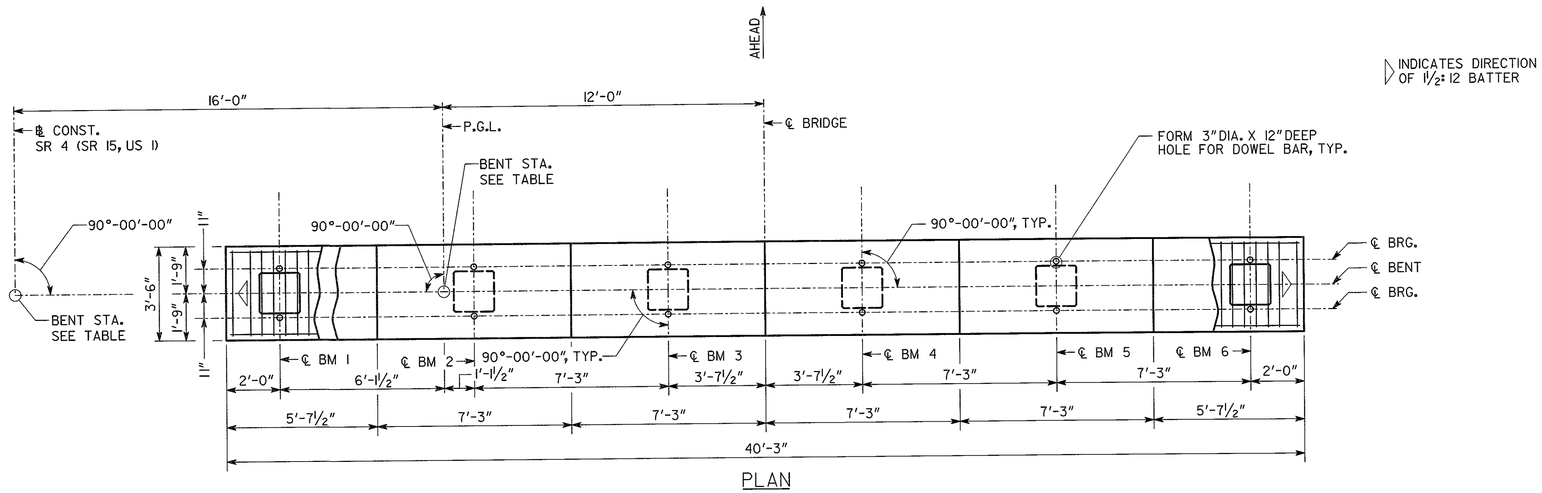

PLAN

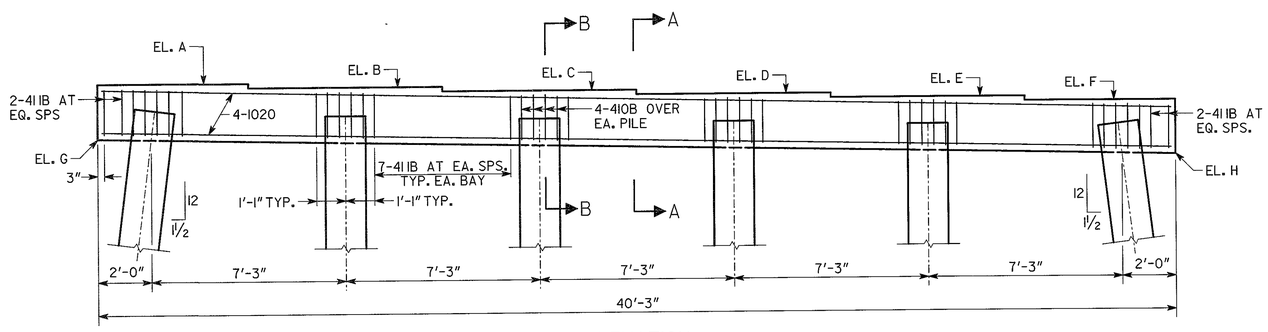

ELEVATION
(LOOKING AHEAD)

BENT STA.	
BENT 15	STA. 61+80.00
BENT 16	STA. 62+40.00
BENT 17	STA. 63+00.00
BENT 18	STA. 63+60.00
BENT 19	STA. 64+20.00
BENT 21	STA. 65+40.00
BENT 22	STA. 66+00.00
BENT 23	STA. 66+60.00
BENT 24	STA. 67+20.00
BENT 25	STA. 67+80.00
BENT 27	STA. 69+00.00
BENT 28	STA. 69+60.00
BENT 29	STA. 70+20.00
BENT 30	STA. 70+80.00
BENT 31	STA. 71+40.00
BENT 33	STA. 72+60.00
BENT 34	STA. 73+20.00
BENT 35	STA. 73+80.00
BENT 36	STA. 74+40.00

BENT STA.	
BENT 37	STA. 75+00.00
BENT 39	STA. 76+20.00
BENT 40	STA. 76+80.00
BENT 41	STA. 77+40.00
BENT 42	STA. 78+00.00
BENT 43	STA. 78+60.00
BENT 45	STA. 79+80.00
BENT 46	STA. 80+40.00
BENT 47	STA. 81+00.00
BENT 48	STA. 81+60.00
BENT 49	STA. 82+20.00
BENT 51	STA. 83+40.00
BENT 52	STA. 84+00.00
BENT 53	STA. 84+60.00
BENT 54	STA. 85+20.00
BENT 55	STA. 85+80.00
BENT 57	STA. 87+00.00
BENT 58	STA. 87+60.00

NOTE: MAINTAIN 2"CL. ON ALL REINFORCEMENT UNLESS OTHERWISE NOTED

ALL PILES SHALL BE PSC, 18 IN SQ

PLAN DRIVING OBJECTIVE

ALL PILES DRIVE TO A DRIVING RESISTANCE OF 90 TONS AFTER A MINIMUM TIP ELEVATION OF 45 IS ACHIEVED.

TABLE OF ELEVATIONS								
	A	B	C	D	E	F	G	H
BENT 15	95.37	95.22	95.08	94.93	94.79	94.64	93.33	92.52
BENT 16	95.12	94.97	94.83	94.68	94.54	94.39	93.07	92.28
BENT 17	94.95	94.81	94.66	94.52	94.37	94.23	92.91	92.11
BENT 18	94.88	94.73	94.59	94.44	94.30	94.15	92.83	92.04
BENT 19 *	94.88	94.74	94.59	94.45	94.30	94.16	92.84	92.04

* 21-25, 27-31, 33-37, 39-43, 45-49, 51-55, 57 & 58 SIMILAR

SUBSTRUCTURE QUANTITIES	
ITEM	BENT 15 *
CY CLASS AA CONCRETE	10.4
LB BAR REINF STEEL	1075

* 16-19, 21-25, 27-31, 33-37, 39-43, 45-49, 51-55, 57 & 58 SIMILAR

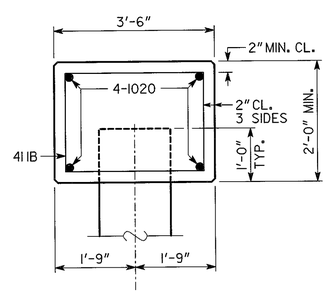

SECTION A-A
NO SCALE

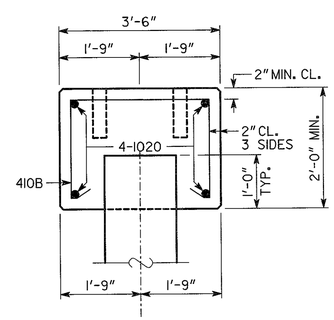

SECTION B-B
NO SCALE

BRIDGE NO. 1

Heath & Lineback Engineers
INCORPORATED
2390 CANTON ROAD, BUILDING 200
MARIETTA, GEORGIA 30066-5393
(770)424-1668

GEORGIA
DEPARTMENT OF TRANSPORTATION
ENGINEERING DIVISION-OFFICE OF BRIDGES AND STRUCTURES

INTERMEDIATE BENTS 15-19, 21-25, 27-31, 33-37, 39-43, 45-49, 51-55, 57,58 DETAILS
SR 4 (SR 15, US 1)
OVER ALTAMAHA RIVER
APPLING/TOOMBS COUNTIES BR000-0001-00(216)

DATE | REVISIONS | BY

DRAWING NO. 35 - 025
BRIDGE SHEET 25 OF 34

SCALE: 3/8" = 1'-0"
NOVEMBER 2013

DESIGNED JRL/JJY/KAK
DRAWN JJY
CHECKED TBS/MS
DESIGN GROUP ACB
REVIEWED WMD/DLC
APPROVED BFR

1 INCH WHEN PRINTED FULL SIZE

JF 2009024 \ BRIDGE \ BRIDGE 1 ALTAMAHA \ 000216_1B_PILE.DGN