STATE	PROJECT NUMBER	SHEET NO.	TOTAL SHEETS
GA.	BR000-0001-00(216)	171	322

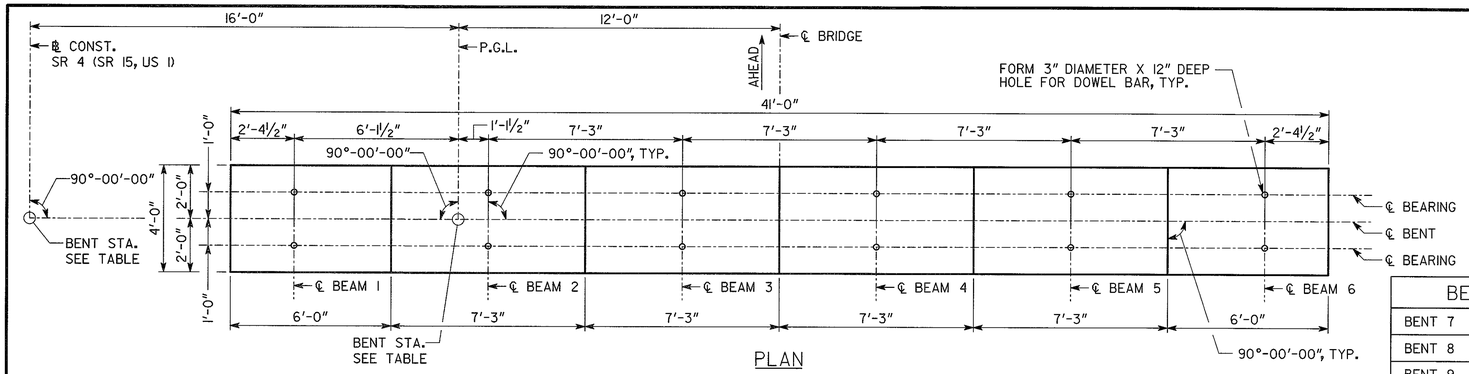

PLAN

BENT STA.	
BENT 7	STA. 55+25.00
BENT 8	STA. 56+10.00
BENT 9	STA. 56+95.00
BENT 10	STA. 57+80.00
BENT 11	STA. 58+65.00
BENT 12	STA. 59+50.00
BENT 13	STA. 60+35.00

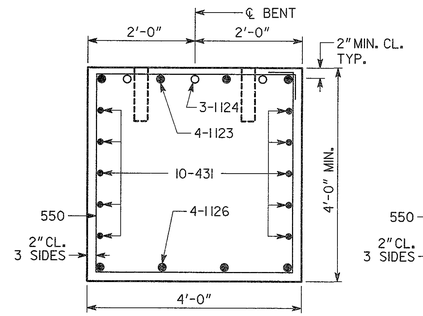

SECTION A-A
NO SCALE

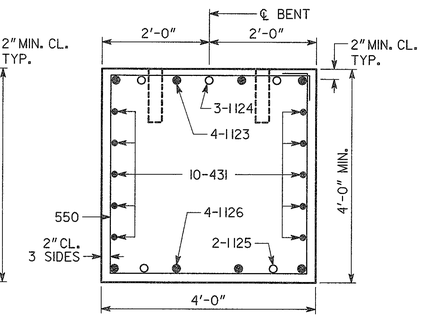

SECTION B-B
NO SCALE

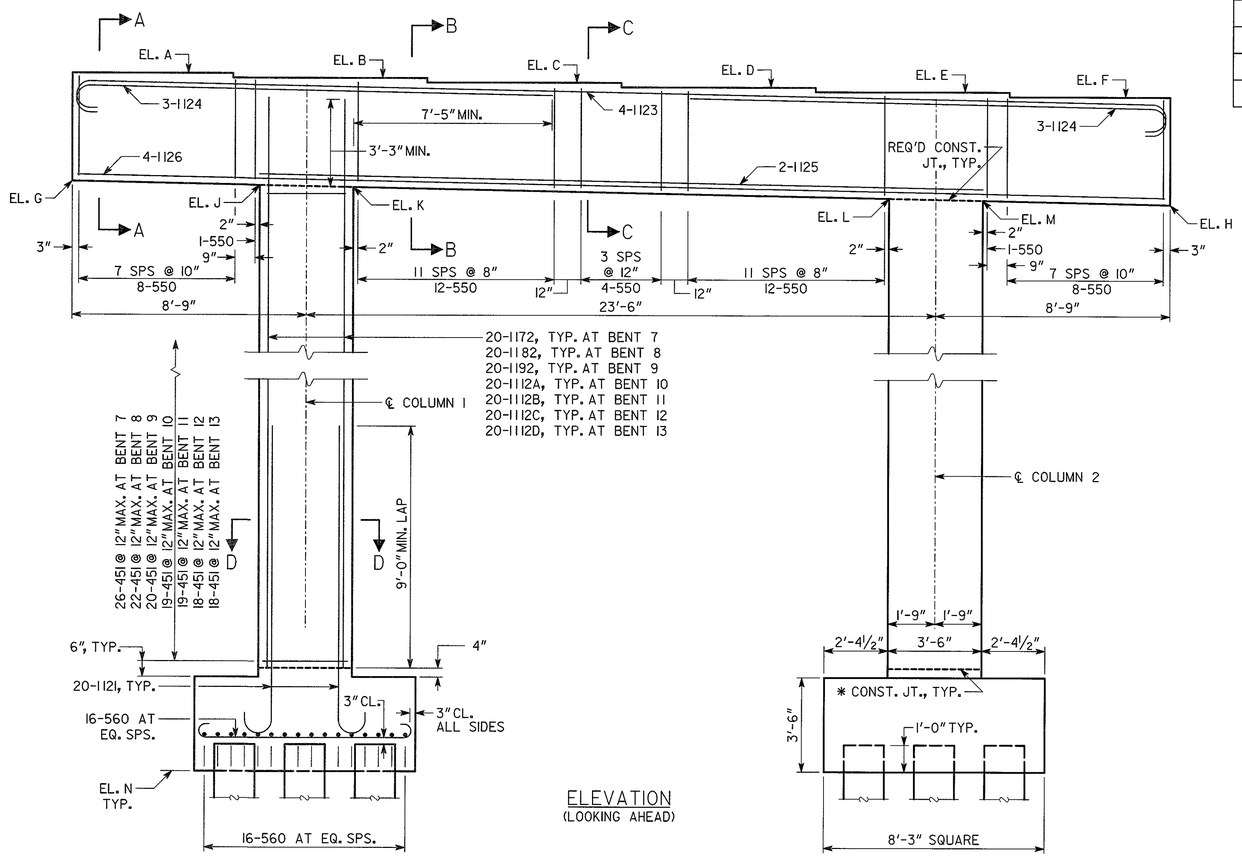

ELEVATION
(LOOKING AHEAD)

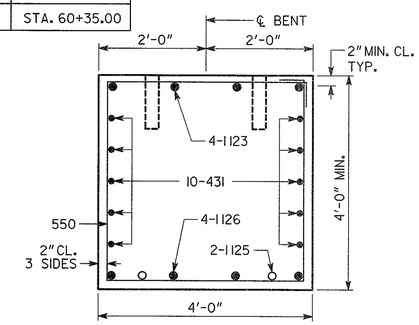

SECTION C-C
NO SCALE

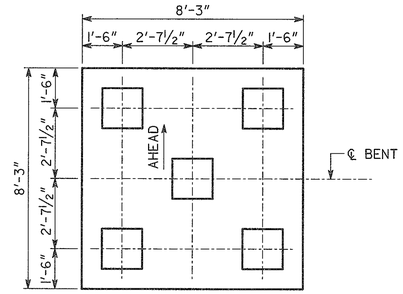

PILE LAYOUT
NO SCALE

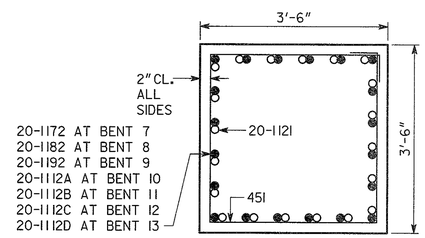

SECTION D-D
NO SCALE

NOTES:
1. MAINTAIN 2" CL. ON ALL REINFORCEMENT UNLESS OTHERWISE NOTED.
2. SEE SECTIONS FOR TOTAL NUMBER AND LOCATION OF 431 BARS.
3. * AT CONTRACTOR'S OPTION CONSTRUCTION JOINT MAY BE RELOCATED TO TOP OF FOOTING.

ALL PILES SHALL BE PSC, 18 IN SQ

PLAN DRIVING OBJECTIVE

DRIVE ALL PILES TO A DRIVING RESISTANCE OF 95 TONS AFTER A MINIMUM TIP ELEVATION OF 45 IS ACHIEVED.

SUBSTRUCTURE QUANTITIES

ITEM	BENT 7	BENT 8	BENT 9	BENT 10	BENT 11	BENT 12	BENT 13
CY CLASS AA CONCRETE	63.9	60.5	59.2	58.0	58.3	57.5	57.2
LB BAR REINF STEEL	13696	12810	12491	12189	12260	12030	11959

TABLE OF ELEVATIONS

	A	B	C	D	E	F	G	H	J	K	L	M	N
BENT 7	102.56	102.42	102.27	102.13	101.98	101.84	98.53	97.71	98.39	98.32	97.92	97.85	70.00
BENT 8	101.22	101.08	100.93	100.79	100.64	100.50	97.19	96.37	97.05	96.98	96.58	96.51	72.50
BENT 9	99.87	99.73	99.58	99.44	99.29	99.15	95.84	95.02	95.70	95.63	95.23	95.16	72.50
BENT 10	98.55	98.40	98.26	98.11	97.97	97.82	94.52	93.70	94.38	94.31	93.91	93.84	72.50
BENT 11	97.39	97.25	97.10	96.96	96.81	96.67	93.36	92.54	93.22	93.15	92.75	92.68	71.00
BENT 12	96.43	96.29	96.14	96.00	95.85	95.71	92.40	91.58	92.26	92.19	91.79	91.72	71.00
BENT 13	95.64	95.49	95.35	95.20	95.06	94.91	91.61	90.79	91.47	91.40	91.00	90.93	70.50

BRIDGE NO. 1

Heath & Lineback Engineers
INCORPORATED
2390 CANTON ROAD, BUILDING 200
MARIETTA, GEORGIA 30066-5393
(770)424-1668

GEORGIA
DEPARTMENT OF TRANSPORTATION
ENGINEERING DIVISION-OFFICE OF BRIDGES AND STRUCTURES

INTERMEDIATE BENTS 7-13 DETAILS
SR 4 (SR 15, US 1) OVER ALTAMAHA RIVER
APPLING/TOOMBS COUNTIES BR000-0001-00(216)

DATE | REVISIONS | BY

DRAWING NO. 35 - 023

BRIDGE SHEET 23 OF 34

SCALE: ⅜" = 1'-0" NOVEMBER 2013

DESIGNED JRL/JJY/KAK CHECKED TBS/MS REVIEWED WMD/DLC
DRAWN JJY DESIGN GROUP ACB APPROVED BFR

1 INCH WHEN PRINTED FULL SIZE

J: 2009024 \ BRIDGE \ BRIDGE 1 ALTAMAHA \ 0001216_LIB7_9_11_12.DGN