BILL OF MATERIAL								
MARK	QTY.	DESCRIPTION	FT	IN	16th	FAB MARK	MILL MARK	WEIGHT
J3	1	SPAN 3 RIGHT BEAM STAGE IIA				TOTAL	WEIGHT=	7001
.	1	W36x135~ASTM A709 GR.50(*H)	50	1	10		10	6768
.	1	PL 3/8x6	2	10	0	pd2	.	22
.	140	7/8"ø ASTM A108 STUDS	0	5	0	.	.	137
.	4	1 1/8"ø THRD. SLEEVES	0	3	8	CN1	.	6
.	1	PL 1 5/8x6	1	2	0	SP1	.	35
.	1	PL 1 5/8x6	1	2	0	SP2	.	33

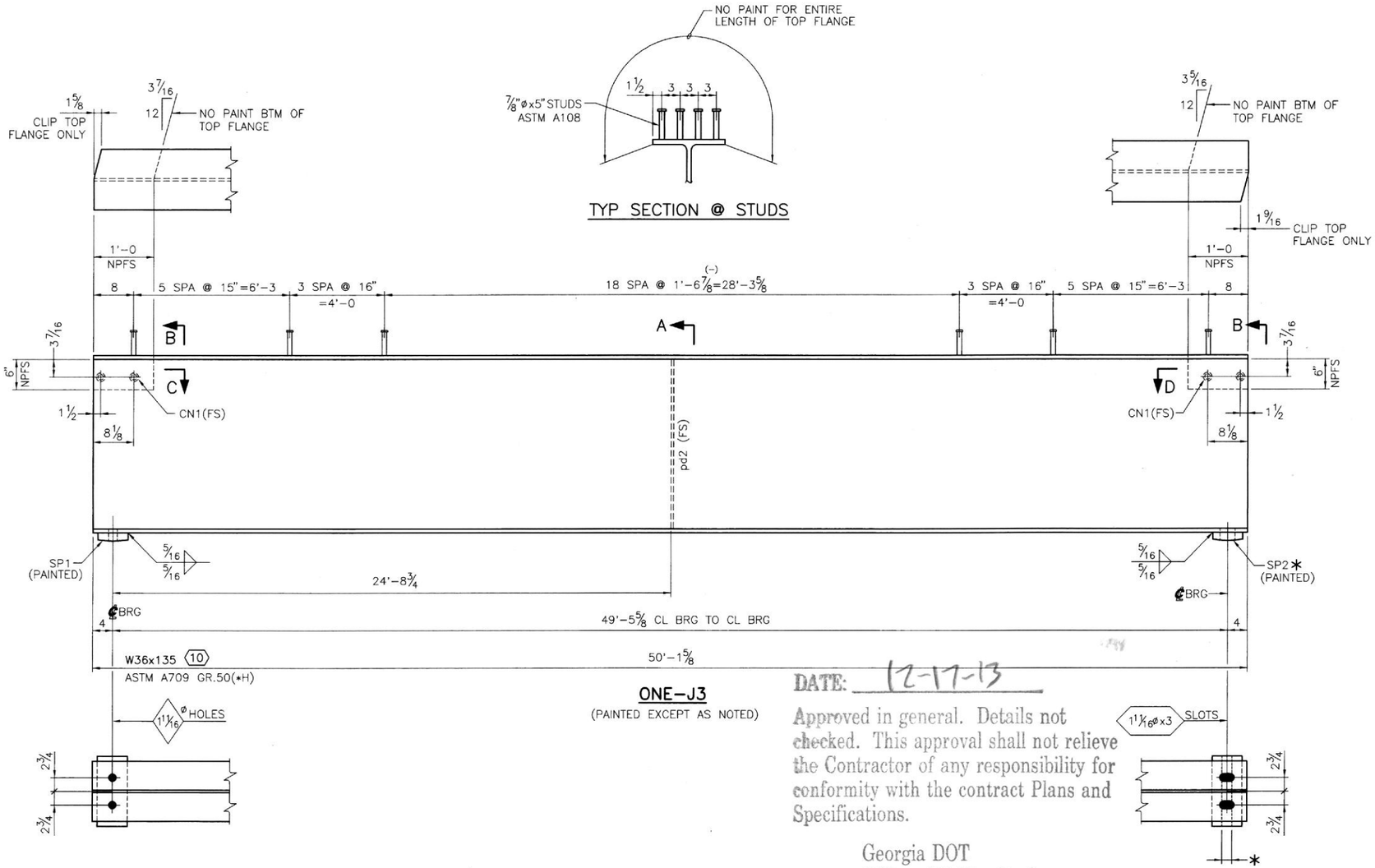

ONE-J3

(PAINTED EXCEPT AS NOTED)

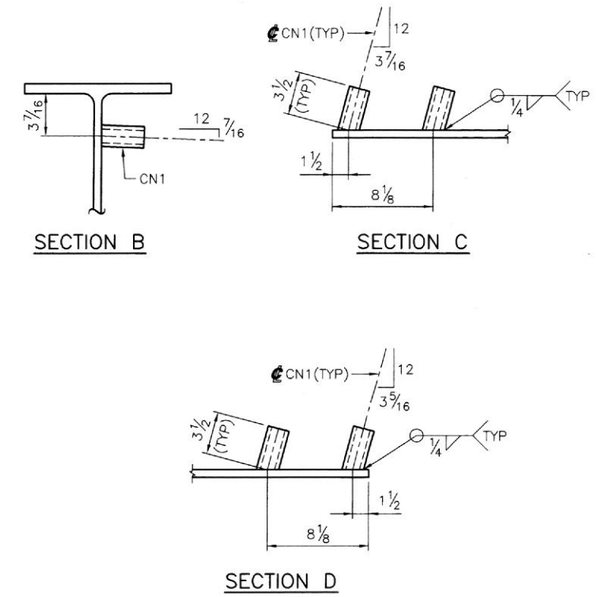

NOTES:

SEE SHEET GN1 FOR GENERAL NOTES AND WELD TERMINATION DETAIL.

*NO PAINT STRIP ON BTM SURFACE OF SOLE PLATE SP2. SEE NOTE ON SHEET D1.

DATE: 12-17-13

Approved in general. Details not checked. This approval shall not relieve the Contractor of any responsibility for conformity with the contract Plans and Specifications.

Georgia DOT
Office of Bridge Design
By: [illegible]

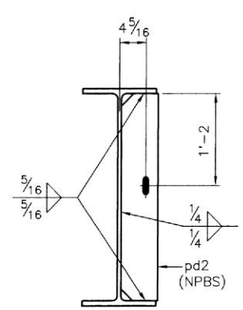

SECTION A

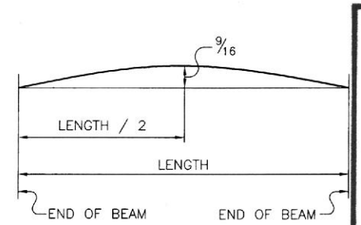

CAMBER DIAGRAM FOR BEAM J3

☑ APPROVED ☐ REVISE AND RESUBMIT

SHOP DRAWING CORRECTIONS OR COMMENTS MADE DURING REVIEW DO NOT RELIEVE THE CONTRACTOR OF COMPLIANCE WITH DRAWING AND SPECIFICATION REQUIREMENTS. THIS CHECK ONLY REVIEWS GENERAL CONFORMITY WITH THE PROJECT DESIGN CONCEPT AND GENERAL COMPLIANCE WITH THE CONTRACT DOCUMENTS. CONTRACTOR'S PERFORMANCE DUTIES ARE STATED IN THE CONTRACT DOCUMENTS, AND ARE NOT MODIFIED BY THIS REVIEW OR COMMENTS MADE ON THESE SHOP DRAWINGS. THE CONTRACTOR IS RESPONSIBLE FOR VERIFICATION OF QUANTITIES AND DIMENSIONS, FABRICATION PROCESS SELECTION, CONSTRUCTION TECHNIQUES, AND WORK COORDINATION AND PERFORMANCE OF ALL TRADES.

BROWDER + LEQUIZAMON AND ASSOCIATES, INC.

DATE 12/09/13 BY P.L.

FIELD BOLTS 3/4"ø A307

OPEN HOLES 15/16"ø UNLESS NOTED

TYPE WELDING L.H. RODS OR SUBMERGED ARC

AISC CERTIFIED FABRICATOR

AUGUSTA IRON & STEEL WORKS, Inc.

P.O. BOX 212479 (30917)
3781 MARTINEZ BLVD.
Phone 706-860-7719
AUGUSTA, GA 30907

REV.	DATE	BY	REVISION DESCRIPTION
△	△	△	

BEAM J3 DETAILS

CUSTOMER: C.W. MATTHEWS

WIDENING I-75 OVER MILL CREEK

BRIDGE No. 2 LEFT & RIGHT

GDOT PROJECT NO. NHS00-0000-00(931)

WHITFIELD COUNTY, GEORGIA

DESIGNED BY: Browder+LeGuizamon & Assoc. / Kimley-Horn & Assoc.

DRAWN BY: JWJ/JDS DATE: 10/2013

CHECKED BY: GB DATE: 11/2013

STEEL SPEC: ASTM A709 GR.36 U.N.

CONTRACT: 1403

SHEET D30 OF 47