STATE	PROJECT NUMBER	SHEET NO.	TOTAL SHEETS
GA.	STP00-0000-00 (833)	165	309

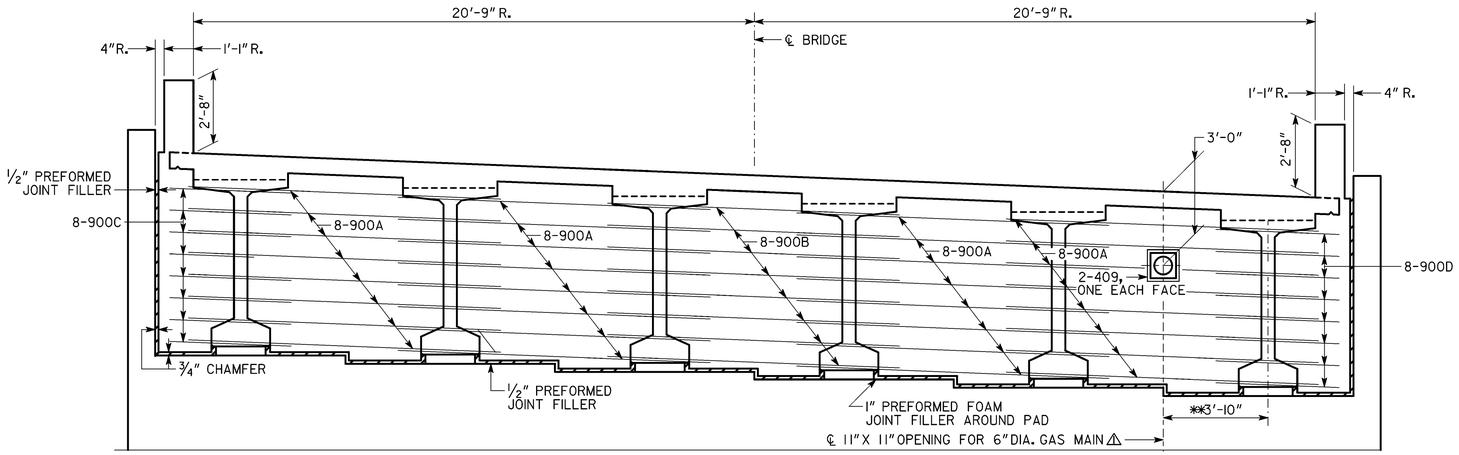

SECTION THRU ENDWALL
(LOOKING AHEAD)

* TAPERS TO 0" AT END POST.

** AT CONTRACTOR'S OPTION, REPLACE 10" RADIUS WITH STRAIGHT INTERSECTING SLOPES.

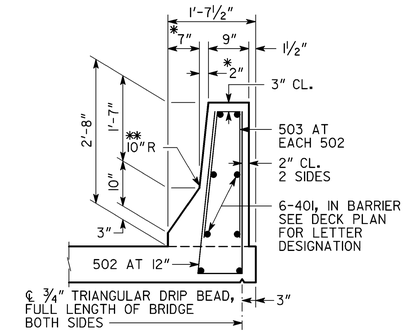

BARRIER DETAIL
SCALE: ¾" = 1'-0"

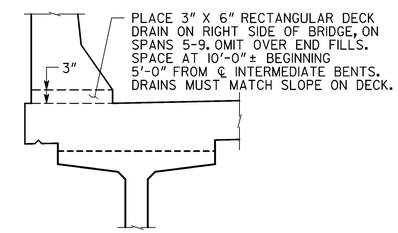

DECK DRAIN DETAIL
NO SCALE

NOTES:

1. R. = RADIAL DIMENSION
2. MAINTAIN 2" MINIMUM CLEARANCE ON ALL REINFORCEMENT UNLESS OTHERWISE NOTED.
3. 404, 504A, 504B, 505, 506A, 506B BARS NOT SHOWN IN SECTION THRU ENDWALL.
4. LAP 900 SERIES BARS A MINIMUM OF 3'-0".
5. ⊛ AT BENT 10 LAP BAR 505 A MINIMUM OF 2'-2". LENGTHS GIVEN ON BAR SCHEDULE INCLUDE THE LAP LENGTHS.
6. ⊛⊛ AT BENT 10 LAP BARS 404 A MINIMUM OF 1'-4". LENGTHS GIVEN ON BAR SCHEDULE INCLUDE THE LAP LENGTHS. CONTRACTOR SHALL ALTERNATE LAP LOCATION SUCH THAT NO MORE THAN 50 PERCENT OF THE LAPS OCCUR AT THE SAME LOCATION.
7. ** DISTANCE MEASURED PERPENDICULAR TO BEAMS.

⚠ 8. SHIFT OR CUT REBAR AS NECESSARY TO ACCOMMODATE UTILITY OPENING.

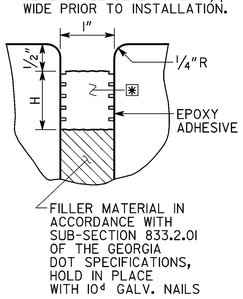

LONGITUDINAL SECTION

EXPANSION JOINT DETAILS
(BENT 1)
NO SCALE

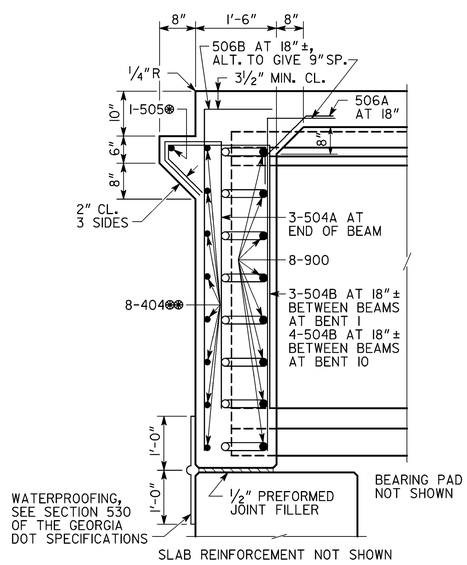

SECTION AT ENDWALL
SCALE: ¾" = 1'-0"

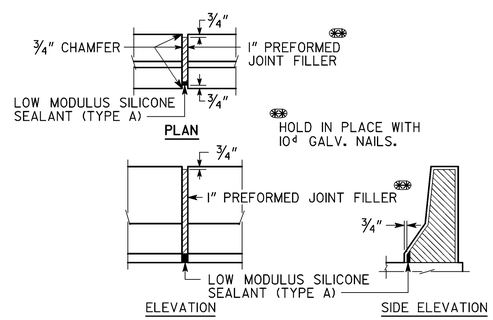

DETAILS OF 1" EXPANSION JOINT IN BARRIER
NO SCALE

USE ANVIL UNIVERSAL CONCRETE INSERT FIG. 282, COOPER B-LINE CONCRETE INSERT FIG. B3014, OR EQUAL. FURNISH AND INSTALL INSERTS. HANGER ASSEMBLIES WILL BE FURNISHED AND INSTALLED BY GAS COMPANY. SPACE HANGERS AT MAXIMUM OF 10'-0" O.C.

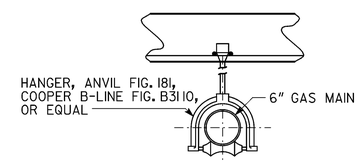

⚠ GAS MAIN SUPPORT DETAILS
NO SCALE

BRIDGE NO. 1

GEORGIA
DEPARTMENT OF TRANSPORTATION
ENGINEERING DIVISION-OFFICE OF BRIDGES AND STRUCTURES

DECK SECTIONS - SHEET 3
CR 454 OVER OCONEE RIVER
LAURENS COUNTY STP00-0000-00(833)

REVISIONS	BY	DATE
⚠ PFPR COMMENTS	JBK	1/14/2013

DRAWING NO. 35-009
BRIDGE SHEET 9 OF 32

SCALE: ⅜" = 1'-0" MARCH 2013

DESIGNED JBK CHECKED DLC REVIEWED DLC/WMD
DRAWN JBK DESIGN GROUP SKG APPROVED BFR

1 INCH WHEN PRINTED FULL SIZE

11/15/2013 4:12:04 PM

CR454.DGN