STATE	PROJECT NUMBER	SHEET NO.	TOTAL SHEETS
GA.		544	562

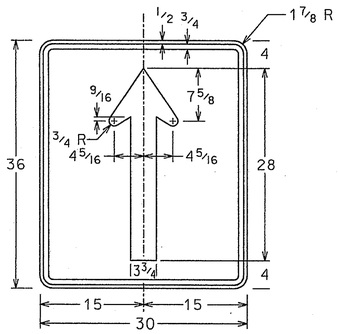

R3-5Ta

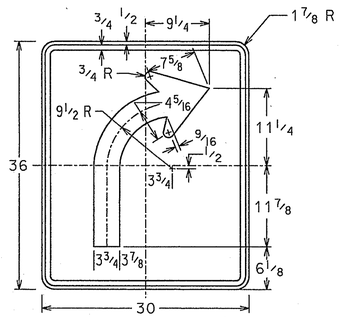

R3-5a

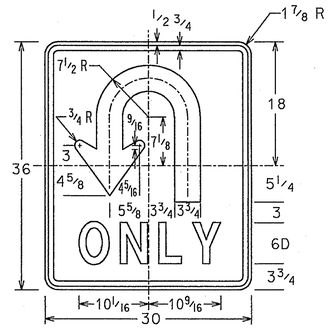

R553-5

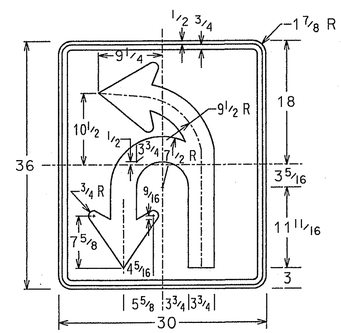

R553-6

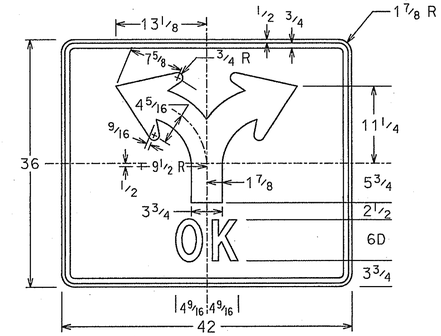

R553-8

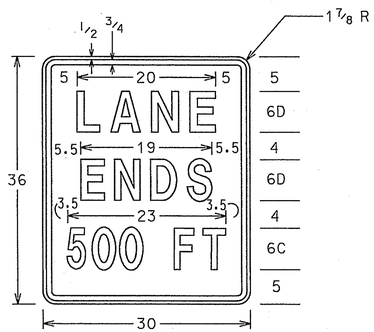

W559-1

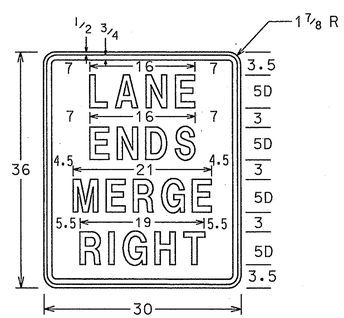

W559-2R

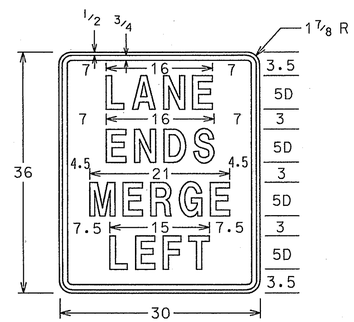

W559-2L

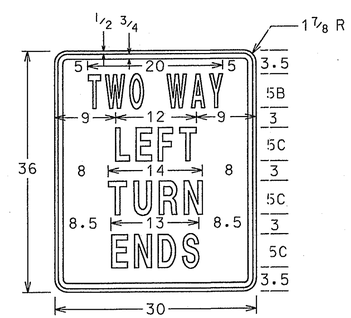

W553-9

GENERAL NOTES:

1. R SIGNS SHALL HAVE WHITE REFLECTORIZED BACKGROUNDS WITH BLACK LEGENDS, BORDERS, AND SYMBOLS.
2. W SIGNS SHALL HAVE YELLOW REFLECTORIZED BACKGROUNDS WITH BLACK LEGENDS AND BORDERS.
3. ALL DIMENSIONS ARE IN INCHES.

DATE	REVISIONS

GEORGIA DEPARTMENT OF TRANSPORTATION
OFFICE OF TRAFFIC SAFETY & DESIGN

DETAILS OF OVERHEAD SIGNS

NO SCALE JANUARY 2000

PCBDTB

\\tdsovrhead signs.dgn Jul. 03, 2003 16:10:14