STATE	PROJECT NUMBER	SHEET NO.	TOTAL SHEETS
GA.	NHS00-0000-00(765)	37a	56a

VOID

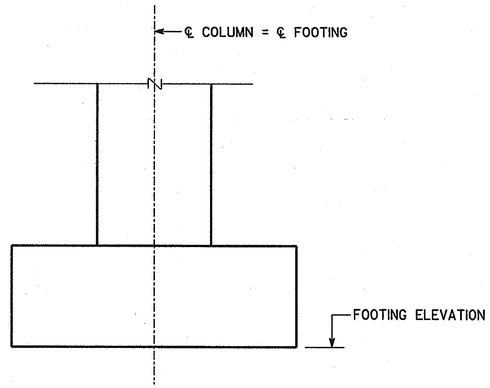

FOUNDATION - ELEVATION

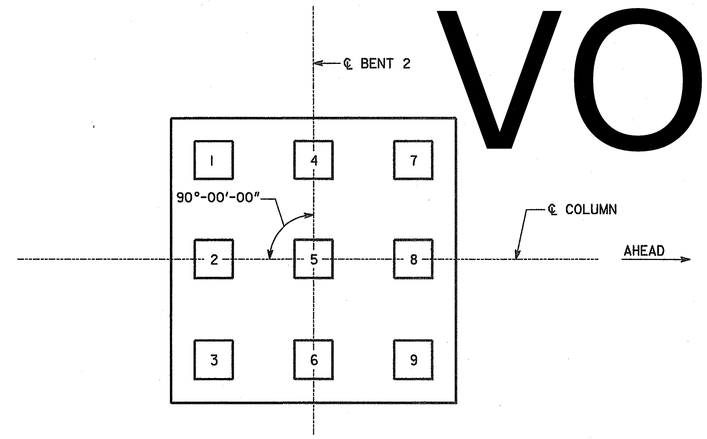

PILE LAYOUT

AS-BUILT FOUNDATION INFORMATION		
BENT	PILE LOCATION	PILE TIP ELEVATION
1	LT. WINGWALL END	
	LT. WINGWALL MIDDLE	
	BEAM 1	
	BEAM 2	
	BEAM 3	
	BEAM 4	
	BEAM 5	
	BEAM 6	
	BEAM 7	
	RT. WINGWALL MIDDLE	
	RT. WINGWALL END	

AS-BUILT FOUNDATION INFORMATION				
BENT	PILE LOCATION	BOT. OF FTG. ELEVATION	PILE NO.	PILE TIP ELEVATION
2	FTG. 1		1	
			2	
			3	
			4	
			5	
			6	
			7	
			8	
			9	
	FTG. 2		1	
			2	
			3	
			4	
			5	
			6	
			7	
			8	
			9	
	FTG. 3		1	
			2	
			3	
			4	
			5	
			6	
			7	
			8	
			9	

AS-BUILT FOUNDATION INFORMATION		
BENT	PILE LOCATION	PILE TIP ELEVATION
3	LT. WINGWALL END	
	LT. WINGWALL MIDDLE	
	BEAM 1	
	BEAM 2	
	BEAM 3	
	BEAM 4	
	BEAM 5	
	BEAM 6	
	BEAM 7	
	RT. WINGWALL MIDDLE	
	RT. WINGWALL END	

THIS SHEET IS TO BE FILLED IN BY THE PROJECT ENGINEER AND FORWARDED TO THE BRIDGE OFFICE AFTER INSTALLATION OF ALL PILES FOR POSTING TO THE PLANS AS A PERMANENT RECORD OF THE BRIDGE CONSTRUCTION.

PROJECT ENGINEER DATE

(AREA CODE) TELEPHONE NUMBER

BRIDGE NO. 1

CSI CIVIL SERVICES, INC.
CONSULTING ENGINEERS
620 PEACHTREE ST., N.E., STE 300R
ATLANTA, GA 30308 (404)685-8001

GEORGIA
DEPARTMENT OF TRANSPORTATION
PRECONSTRUCTION DIVISION-OFFICE OF BRIDGE DESIGN

AS BUILT FOUNDATION PLAN
CR 418 (OMEGA-ELDORADO RD.) OVER I-75
TIFT COUNTY NHS00-0000-00(765)

SCALE: 1" = 10'-0" APRIL 2009

DATE	REVISIONS	BY

BRIDGE SHEET 11 OF 13

DESIGNED FRQ	CHECKED RK / GRH	REVIEWED WEI / WMD
DRAWN JRC	DESIGN GROUP EJC	APPROVED PVL

X.DGN