COUNTY	PROJECT NUMBER	SHEET NO.	TOTAL SHEETS
TIFT	NHS00-0000-00(765)	206	562

SIDE DRAIN FOR DRIVEWAY @ STA 41+00 LT

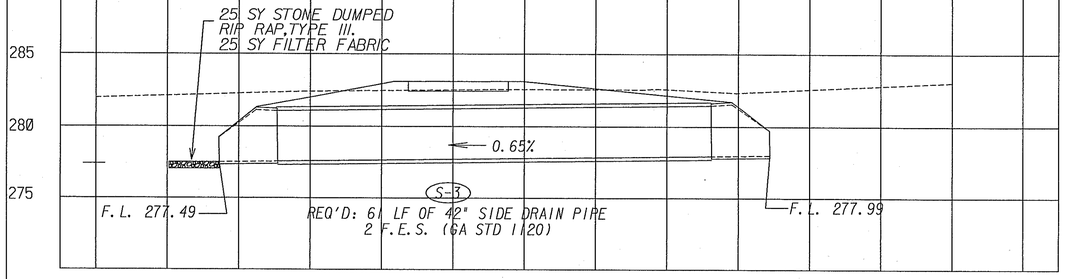

SIDE DRAIN FOR DRIVEWAY @ STA 58+65 RT

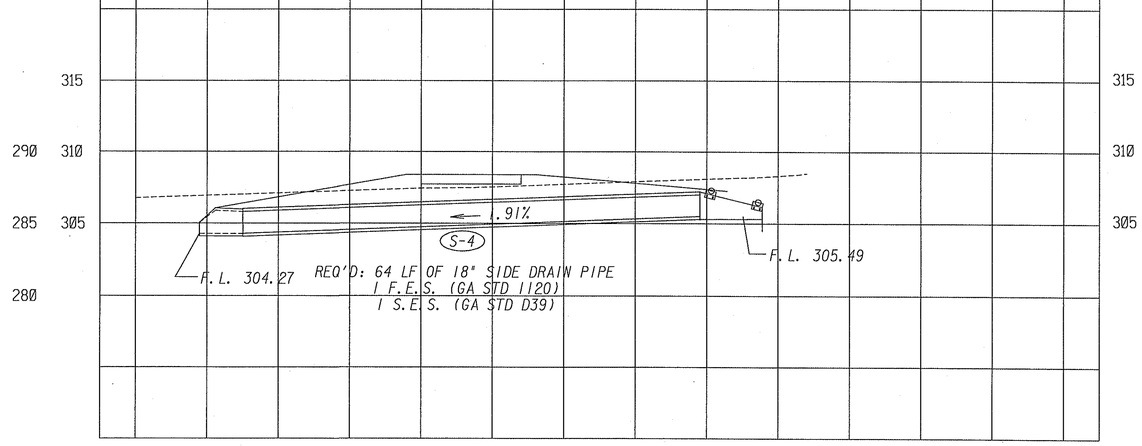

SIDE DRAIN FOR DRIVEWAY @ STA 39+10 RT

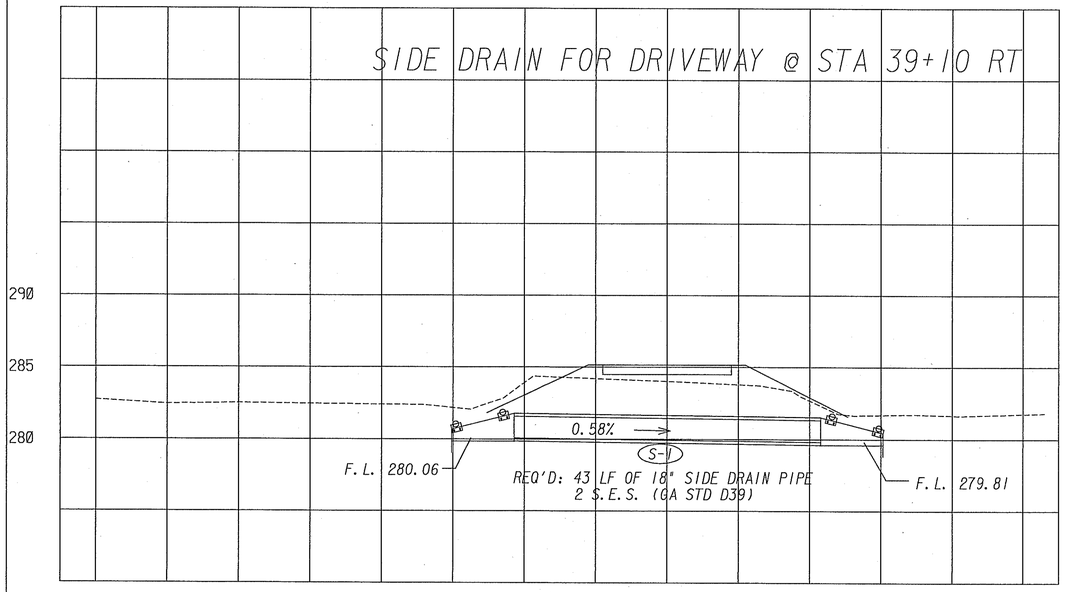

SIDE DRAIN FOR DRIVEWAY @ STA 40+97 RT

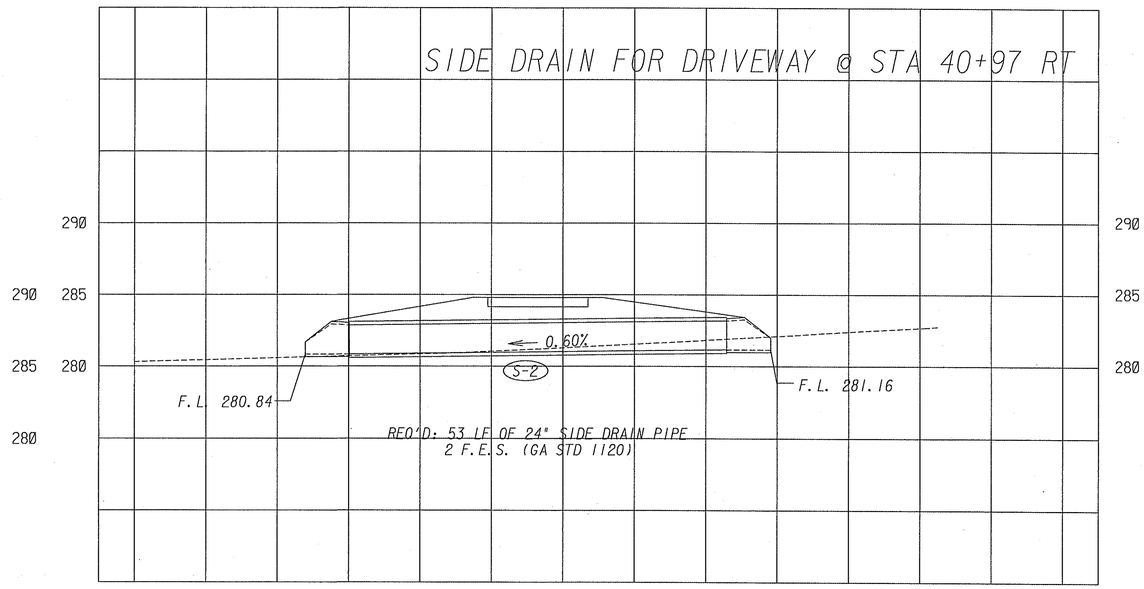

PLANS PREPARED AND SUBMITTED BY:

AEI

1634 White Circle, Suite 101
Marietta, GA 30066
(770) 421-8422

AMERICAN ENGINEERS, INC.
www.aei.cc
PROFESSIONAL ENGINEERING

SCALES:
VERTICAL 1" = 5'
HORIZONTAL 1" = 10'

REVISION DATES

STATE OF GEORGIA
DEPARTMENT OF TRANSPORTATION
OFFICE: PROGRAM DELIVERY

DRAINAGE PROFILES
OMEGA-ELDORADO ROAD

NHS00-0000-00(765)
P.I. 0000765

DRAWING No.
22-06

GPLN

Y:\0000765\DGN\0007650P03.dgn 3/1/2011 4:28:25 PM