STATE	PROJECT NUMBER	SHEET NO.	TOTAL SHEETS
GA.		9/3	1031

DETAILS OF RETAINING WALL TYPICAL SECTIONS

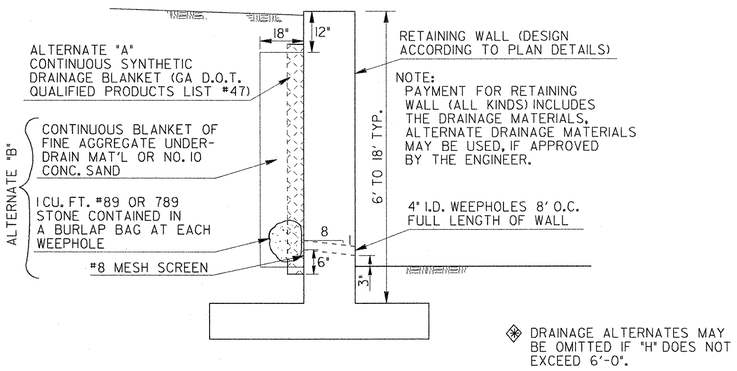

◈ DRAINAGE ALTERNATES MAY BE OMITTED IF "H" DOES NOT EXCEED 6'-0".

STANDARD DRAINAGE FOR RETAINING WALLS

(FOR HEIGHTS FROM 6 FT. TO 18 FT.- SPECIAL DESIGN DRAINAGE REQUIRED FOR RETAINING WALLS OVER 18 FT. IN HEIGHT.)

(a) - SLOPED BACKFILL, NO DITCH

(b) - SLOPED BACKFILL WITH DITCH

(c) - FLAT BACKFILL

d = DITCH DEPTH, 6'-12" TYPICAL
SEE PLANS FOR DESIGN

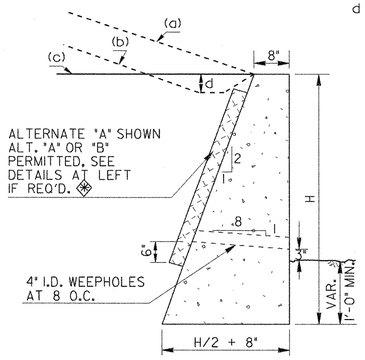

MAXIMUM "H" *		
BACKFILL	PLAIN WALL	W.BARRIER FACE
FLAT	10'-0" **	10'-0"
SLOPE TO 4:1	6'-3"	7'-0"
SLOPE TO 2:1	4'-6"	4'-9"

* GREATER "H" PERMITTED IF APPROVED BY BRIDGE DESIGN.

** MAXIMUM "H" OF 7'-3" HERE IF TRAFFIC IS ON BACKFILL.

TYPICAL SECTION FOR GRAVITY TYPE WALL

MATERIALS: CLASS "B" CONC. OR MORTAR RUBBLE MASONARY.

NOTE:
SEE STANDARD 4948 WHERE CONCRETE
SIDE BARRIERS ARE DESIRED.

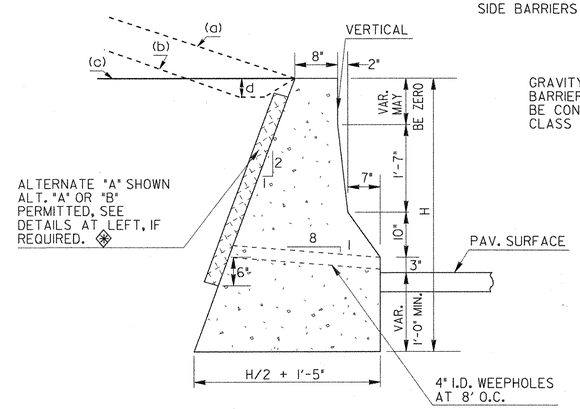

TYPICAL SECTION FOR GRAVITY WALL WITH BARRIER FACE

DETAIL FOR RAISING HEADWALL

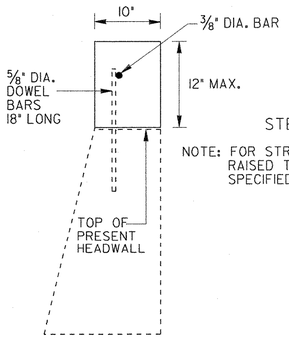

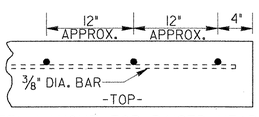

STEEL LAYOUT FOR RAISED HEADWALL

NOTE: FOR STRUCTURES WITH WINGWALLS, THE WINGS SHALL BE RAISED THE SAME AMOUNT AS THE HEADWALL, UNLESS SPECIFIED OTHERWISE.

TYPICAL PIPE PLUG

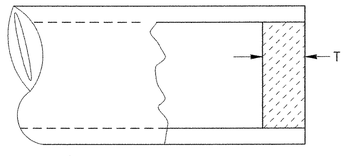

SECTION

NOTE: PLAN PAY QUANTITIES ARE TO REFLECT PIPE PLUGS AS CU. YDS. OF CL. A OR CL. B CONCRETE. ON CONSTRUCTION PLUGS MAY BE BUILT WITH BRICK MASONRY, MORTAR RUBBLE MASONRY, CL. A CONC., OR CL. B CONC. WITH NO ADJUSTMENT IN PAYMENT MADE FOR ALTERNATES.

D	T (MIN)	PIPE PLUG (CU. YDS.)
12"	8"	0.0194
15"	8"	0.0303
18"	8"	0.0436
24"	8"	0.0776
30"	8"	0.1212
36"	8"	0.1745
42"	8"	0.2376
48"	8"	0.3103
54"	12"	0.5890
60"	12"	0.7272
66"	12"	0.8799
72"	12"	1.0472

DATE	REVISION
6-30-98	REDRAWN
4-30-84	ADD PIPE PLUG DETAILS
2-15-83	RET. WALL "H" TABLE ADDED

DEPARTMENT OF TRANSPORTATION
STATE OF GEORGIA

STANDARD
RETAINING WALL TYPICAL SECTIONS, RAISING HEADWALL, AND TYPICAL PIPE PLUG.

NO SCALE: REV. & REDR. DECEMBER, 1982

BY: G.J.P. REDR. R.M.U. TRA. R.M.U. CHK.

REV. & R.M.U. (SUBMITTED)
STATE ROAD & AIRPORT DESIGN ENGR.
(APPROVED) G.M.E. R.K.C.
STATE HIGHWAY ENGINEER

NUMBER 9031L
SHEET 1 OF 2