VOID

STATE	PROJECT NUMBER	SHEET NO.	TOTAL SHEETS
GA.	STP00-0000-00(566)	159	161

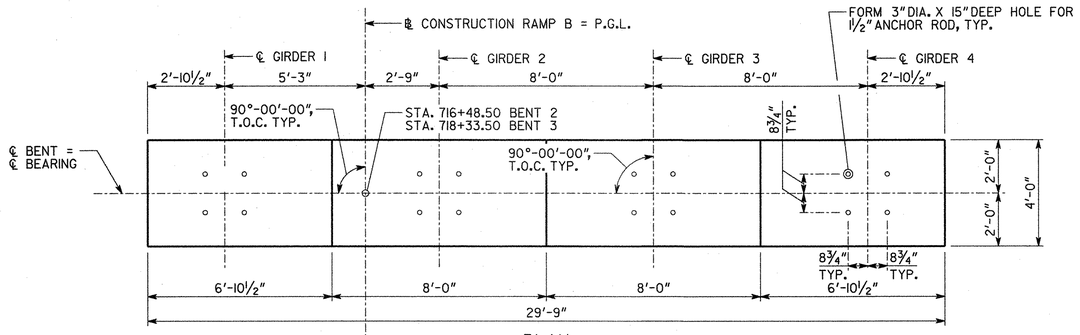

PLAN

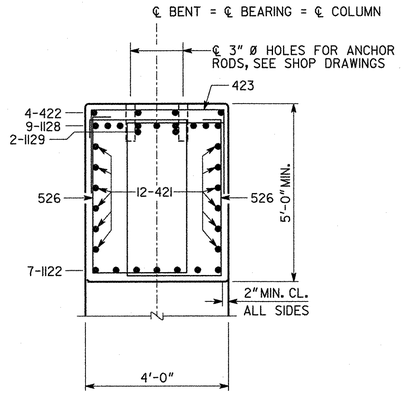

SECTION A-A

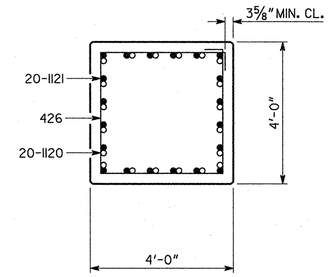

SECTION B-B

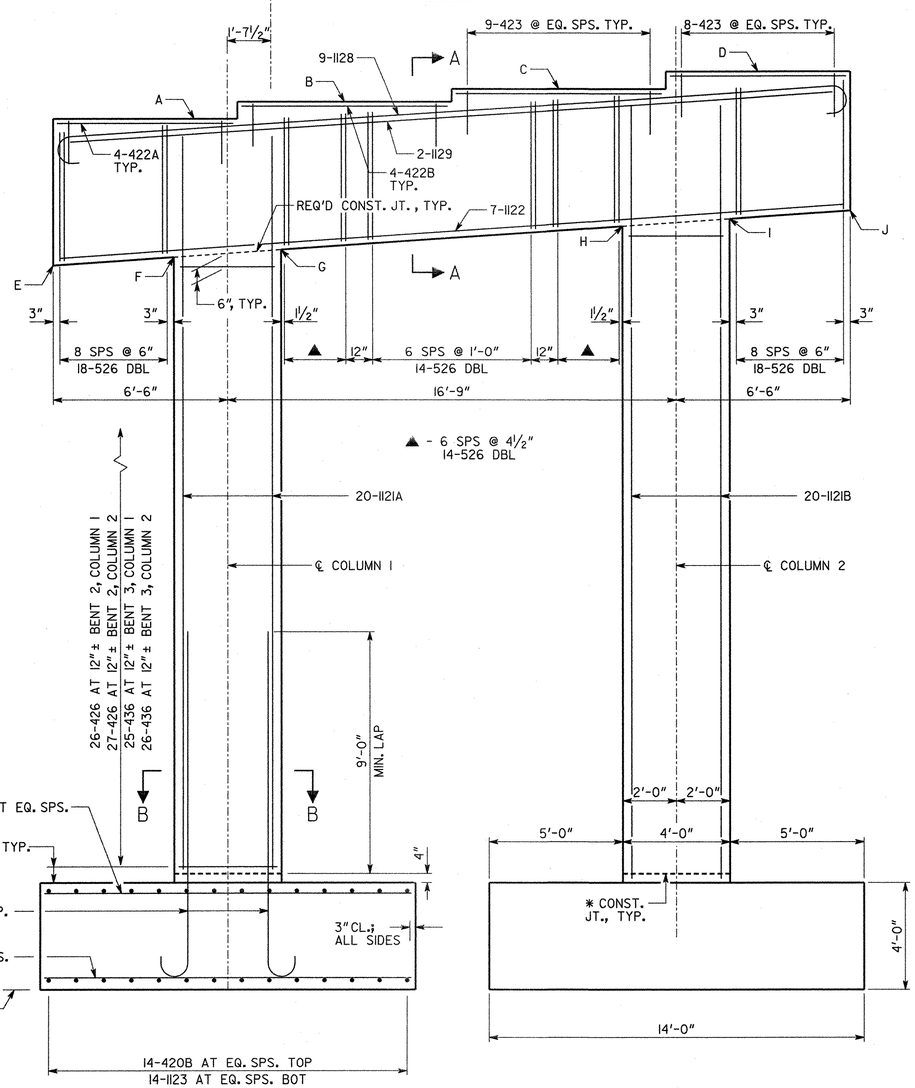

ELEVATION
(LOOKING AHEAD)

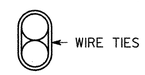

BARS TO BE BUNDLED SHALL BE BUNDLED VERTICALLY

BUNDLING DETAIL

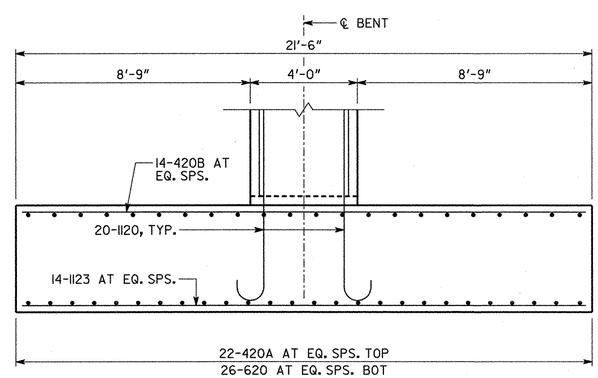

SIDE ELEVATION

TABLE OF ELEVATIONS											
	A	B	C	D	E	F	G	H	I	J	K
BENT 2	356.01	356.65	357.11	357.75	350.53	350.84	351.11	351.99	352.27	352.58	322.00±
BENT 3	354.94	355.58	356.04	356.68	349.46	349.77	350.04	350.92	351.20	351.51	322.00±

NOTES:

CAP DIMENSION AND ELEVATIONS SHOWN FOR THE TOP AND BOTTOM OF THE CAP ARE BASED ON THE 'X' DIMENSION SHOWN ON THE POT BEARING DETAILS SHEET. THESE ELEVATIONS SHALL BE ADJUSTED BY THE CONTRACTOR TO ACCOUNT FOR THE ACTUAL HEIGHT OF THE POT BEARING TO BE USED. BENT CAP CONCRETE SHALL NOT BE POURED UNTIL THE POT BEARING SHOP DRAWINGS HAVE BEEN APPROVED AND NECESSARY ADJUSTMENTS HAVE BEEN MADE.

* AT CONTRACTOR'S OPTION, CONSTRUCTION JOINT MAY BE RELOCATED TO TOP OF FOOTING.

MAINTAIN 2" CL. ON ALL REINFORCEMENT UNLESS OTHERWISED NOTED.

REINFORCING CALLOUTS SHOWN FOR BENT 2. BENT 3 REINFORCING SIMILAR. SEE BAR REINFORCEMENT SCHEDULE.

SPREAD FOOTINGS ARE DESIGNED FOR A BEARING PRESSURE OF 3 TONS PER SQ. FT.

SUBSTRUCTURE QUANTITIES		
ITEM	BENT 2	BENT 3
CY CLASS AA CONCRETE	142.9	141.7
LB BAR REINF STEEL	19,828	19,579

BRIDGE NO. 5

Kimley-Horn and Associates, Inc.

©, 2012

SUITE 220, 2 SUN COURT
NORCROSS, GEORGIA 30092-2865

GEORGIA
DEPARTMENT OF TRANSPORTATION
PRECONSTRUCTION DIVISION-OFFICE OF BRIDGE DESIGN

BENTS 2 AND 3
RAMP B OVER NORFOLK SOUTHERN RAILWAY
BIBB COUNTY STP00-0000-00(566)

NO SCALE FEBRUARY 2012

DESIGNED JSS CHECKED DLS REVIEWED WMD/WEI
DRAWN CAL DESIGN GROUP SWW APPROVED BFR

REVISIONS | BY | DATE

DRAWING NO. 35 - 83
BRIDGE SHEET B5 - 15 OF 18