STATE	PROJECT NUMBER	SHEET NO.	TOTAL SHEETS
GA.	STP00-0000-00(566)	732	1059

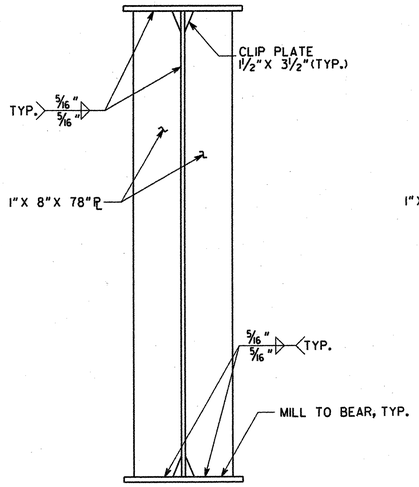

BEARING STIFFENER
BENTS 1 AND 4

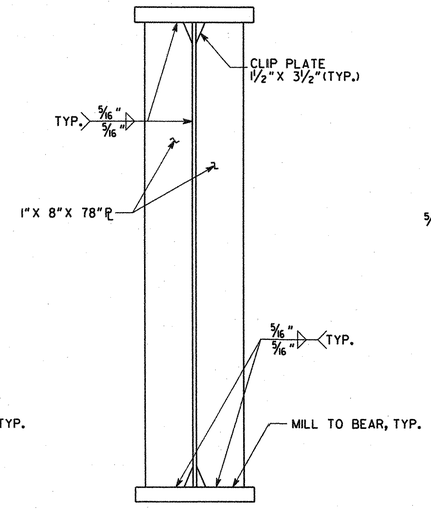

BEARING STIFFENER
BENTS 2 AND 3

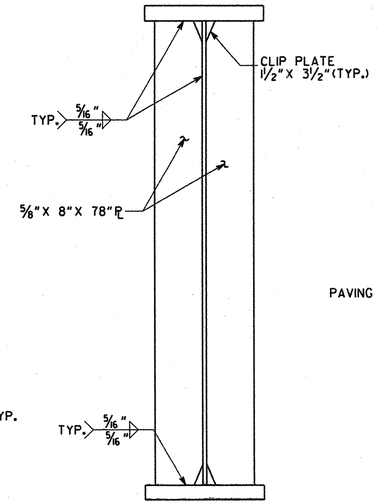

SPLICE STIFFENER OR
CROSS FRAME GUSSET

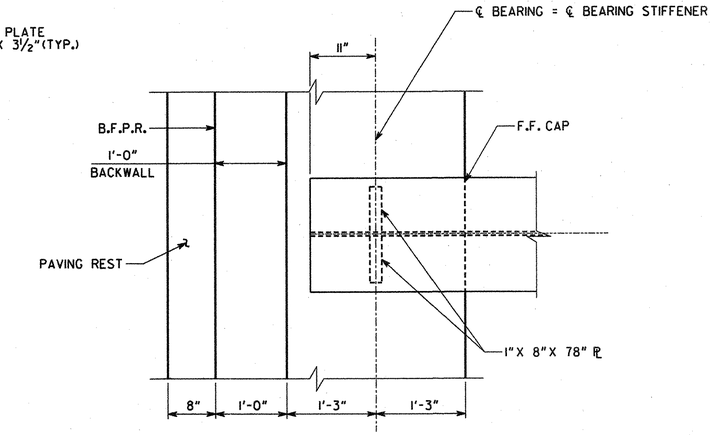

BEARING STIFFENER PLAN
BENT 1 SHOWN, OTHERS SIMILAR

NOTE: ALL STIFFENER AND GUSSET PLATES SHALL BE MILLED TO FIT TIGHT, UNLESS NOTED OTHERWISE.

BRIDGE NO. 5

Kimley-Horn and Associates, Inc.

©, 2012

SUITE 220, 2 SUN COURT
NORCROSS, GEORGIA 30092-2865

GEORGIA
DEPARTMENT OF TRANSPORTATION
PRECONSTRUCTION DIVISION-OFFICE OF BRIDGE DESIGN

STRUCTURAL STEEL DETAILS
RAMP B OVER NORFOLK SOUTHERN RAILWAY
BIBB COUNTY STP00-0000-00(566)

NO SCALE FEBRUARY 2012

DESIGNED JSS CHECKED DLS REVIEWED WMD/WEI
DRAWN CAL DESIGN GROUP SWW APPROVED BFR

REVISIONS | DATE | BY

DRAWING NO. 35 - 76
BRIDGE SHEET B5 - 8 OF 18