STATE	PROJECT NUMBER	SHEET NO.	TOTAL SHEETS
GA.	STP00-0000-00(566)	729	1037

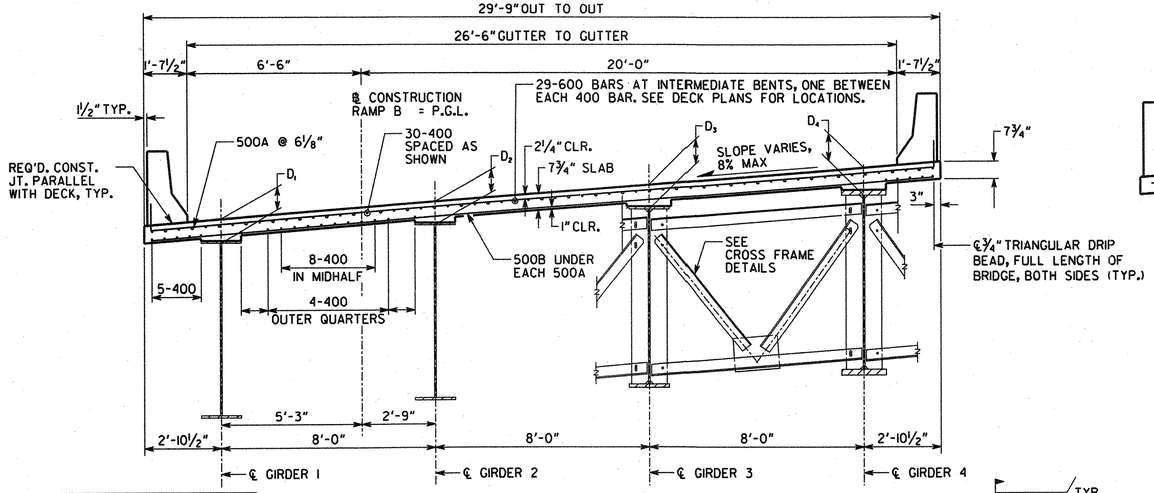

TYPICAL SECTION
(LOOKING AHEAD)
⅜" = 1'-0"

SPAN	D1	D2	D3	D4
1	10½"	10½"	11⅝"	11⅝"
2	10½"	10½"	11⅝"	11⅝"
3	10½"	10½"	11⅝"	11⅝"

SEE NOTE

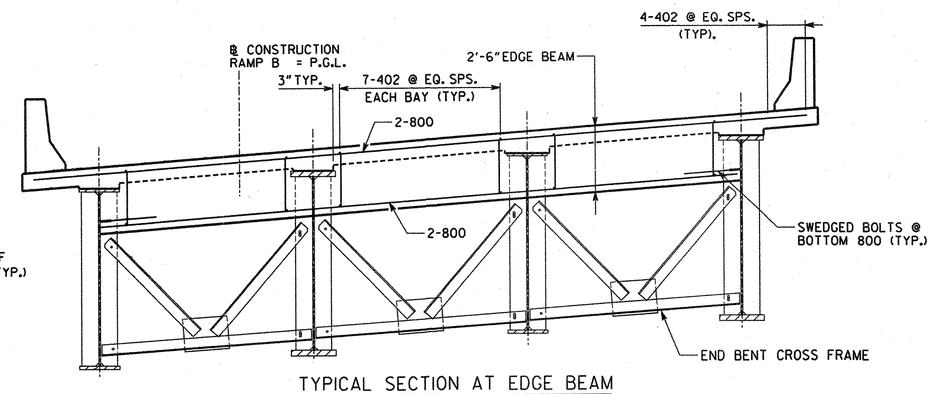

TYPICAL SECTION AT EDGE BEAM
(LOOKING AHEAD)
⅜" = 1'-0"

NOTE:
COST FOR SUPPLYING AND INSTALLING SLEEVE AND BOLT TO BE INCLUDED IN PRICE BID FOR STRUCTURAL STEEL.

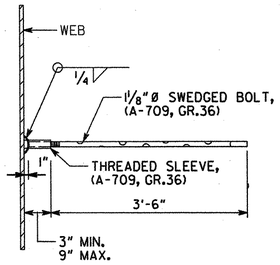

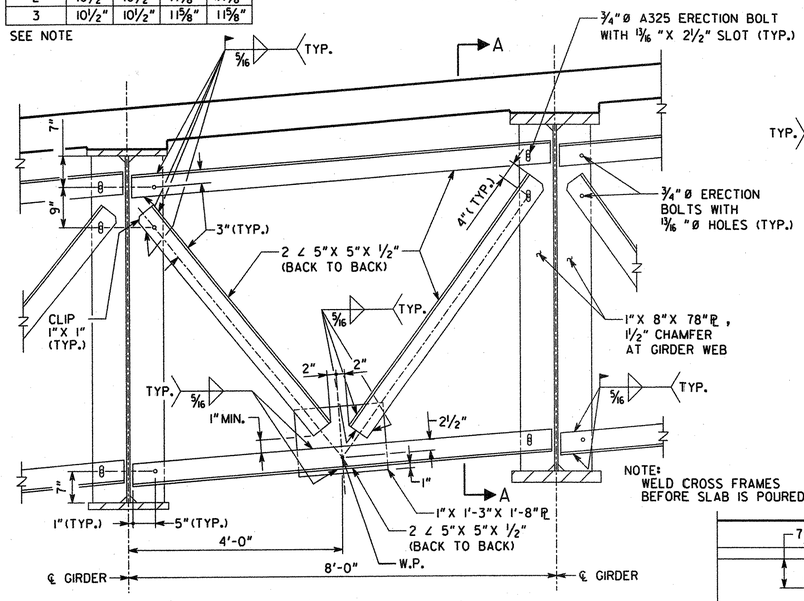

NOTE:
WELD CROSS FRAMES BEFORE SLAB IS POURED.

INTERIOR BENT CROSS FRAME DETAILS
(LOOKING AHEAD)
SCALE: ¾" = 1'-0"

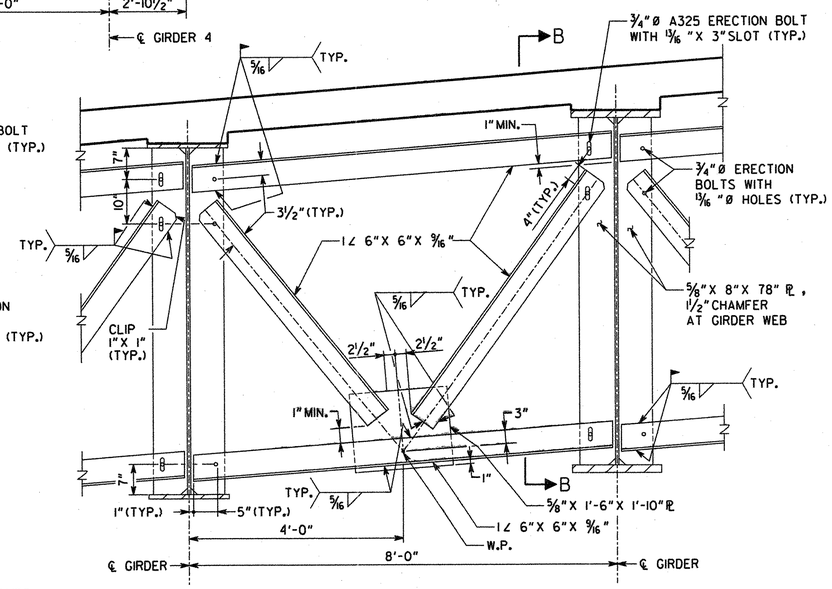

INTERMEDIATE CROSS FRAME DETAILS
(LOOKING AHEAD)
SCALE: ¾" = 1'-0"

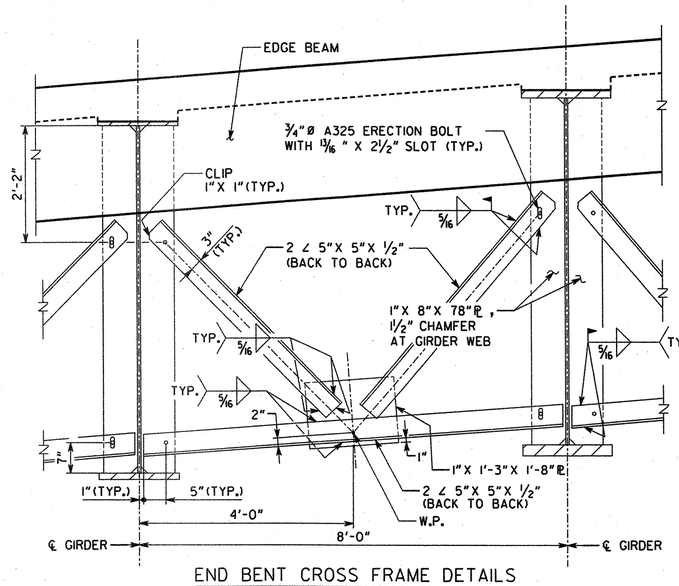

END BENT CROSS FRAME DETAILS
(LOOKING AHEAD)
SCALE: ¾" = 1'-0"

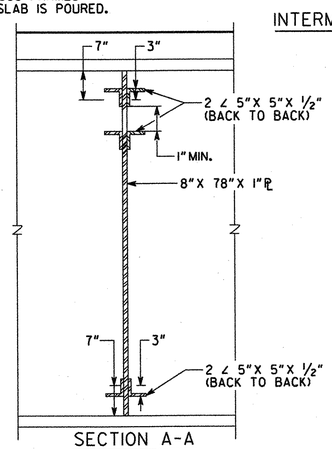

SECTION A-A
SCALE: ¾" = 1'-0"

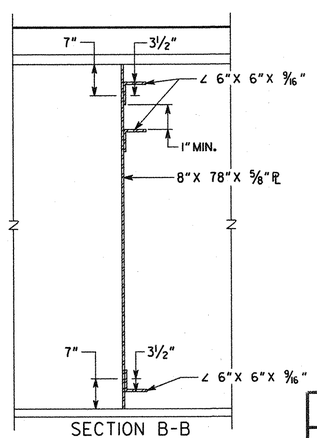

SECTION B-B
SCALE: ¾" = 1'-0"

NOTE: DIMENSION "D" IS MEASURED FROM THE TOP OF SLAB TO THE TOP OF GIRDER WEB, AND IS TRUE AT CENTERLINE BEARING AND AT SPLICE POINTS. VARY "D" BETWEEN BEARING AND SPLICE POINTS TO COMPENSATE FOR VERTICAL CURVE AND DEAD LOAD DEFLECTION. MAINTAIN A CONSTANT SLAB THICKNESS OF 7¾" BETWEEN GIRDERS AND AT OVERHANG.

BRIDGE NO. 5

Kimley-Horn and Associates, Inc.

©, 2012

SUITE 220, 2 SUN COURT
NORCROSS, GEORGIA 30092-2865

GEORGIA
DEPARTMENT OF TRANSPORTATION
PRECONSTRUCTION DIVISION-OFFICE OF BRIDGE DESIGN

DECK SECTIONS
RAMP B OVER NORFOLK SOUTHERN RAILWAY
BIBB COUNTY STP00-0000-00(566)

REVISIONS	BY	DATE

DRAWING NO. 35 - 73
BRIDGE SHEET B5 - 5 OF 18

SCALE: AS NOTED FEBRUARY 2012

DESIGNED JSS CHECKED DLS REVIEWED WMD/WEI
DRAWN CAL DESIGN GROUP SWW APPROVED BFR