STATE	PROJECT NUMBER	SHEET NO.	TOTAL SHEETS
GA.	STP00-0000-00(566)	720	1037

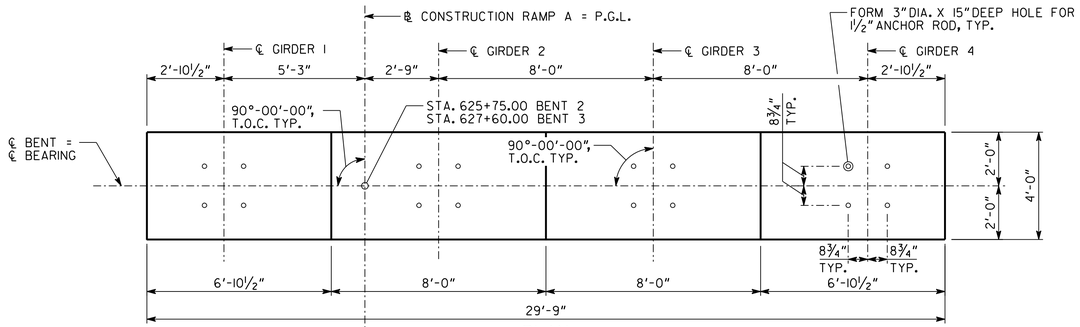

PLAN

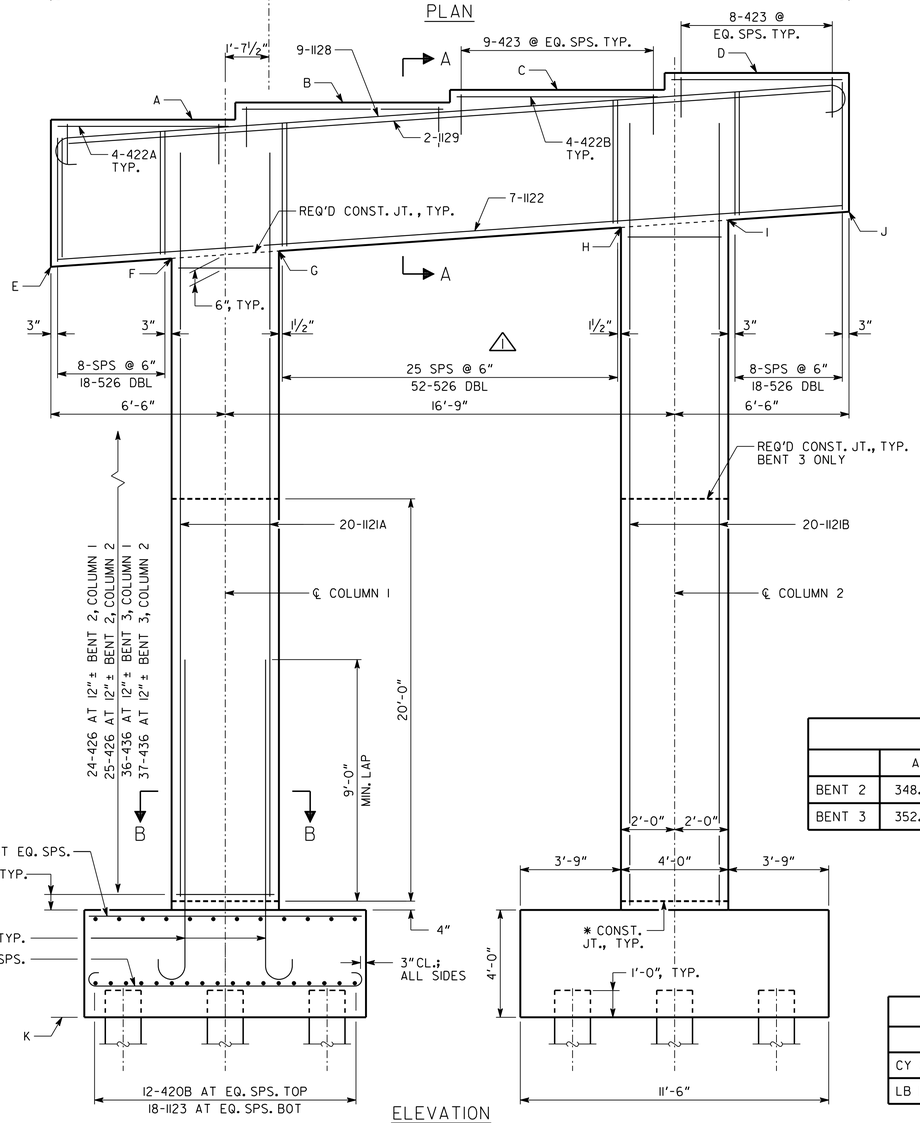

ELEVATION
(LOOKING AHEAD)

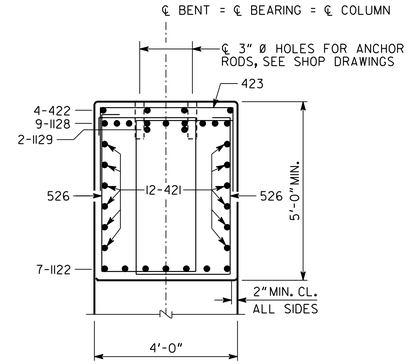

SECTION A-A

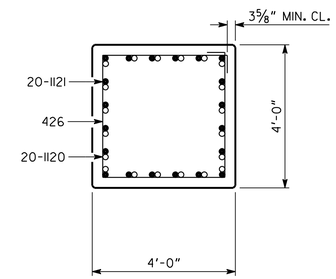

SECTION B-B

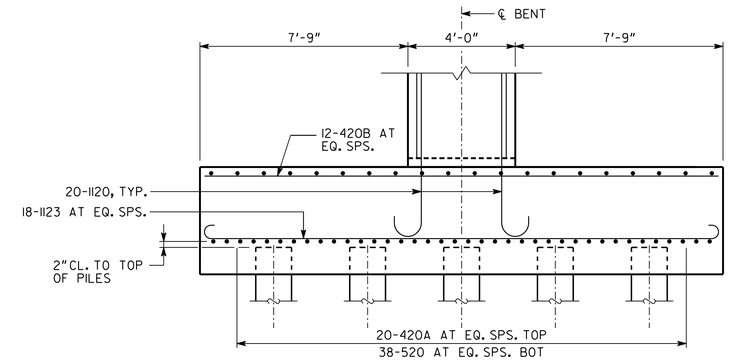

SIDE ELEVATION

BARS TO BE BUNDLED SHALL BE BUNDLED VERTICALLY

BUNDLING DETAIL

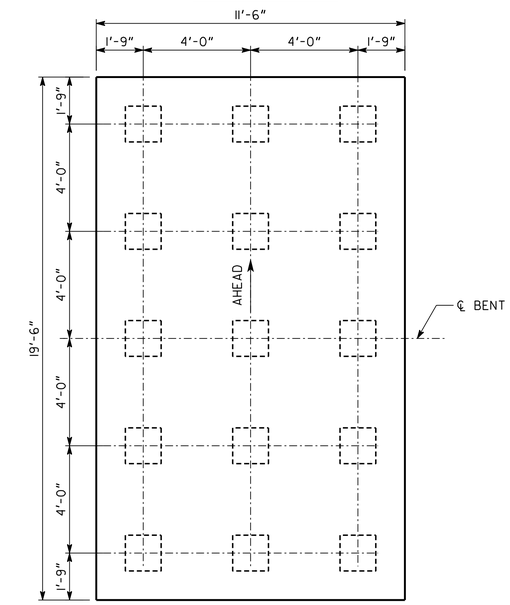

PILE LAYOUT
ALL PILES SHALL BE PSC, 16 IN. SQ.

NOTES:

CAP DIMENSION AND ELEVATIONS SHOWN FOR THE TOP AND BOTTOM OF THE CAP ARE BASED ON THE "X" DIMENSION SHOWN ON THE POT BEARING DETAILS SHEET. THESE ELEVATIONS SHALL BE ADJUSTED BY THE CONTRACTOR TO ACCOUNT FOR THE ACTUAL HEIGHT OF THE POT BEARING TO BE USED. BENT CAP CONCRETE SHALL NOT BE POURED UNTIL THE POT BEARING SHOP DRAWINGS HAVE BEEN APPROVED AND NECESSARY ADJUSTMENTS HAVE BEEN MADE.

* AT CONTRACTOR'S OPTION, CONSTRUCTION JOINT MAY BE RELOCATED TO TOP OF FOOTING.

MAINTAIN 2" CL. ON ALL REINFORCEMENT UNLESS OTHERWISED NOTED.

REINFORCING CALLOUTS SHOWN FOR BENT 2. BENT 3 REINFORCING SIMILAR. SEE BAR REINFORCEMENT SCHEDULE.

TABLE OF ELEVATIONS

	A	B	C	D	E	F	G	H	I	J	K
BENT 2	348.33	348.97	349.43	350.07	342.85	343.16	343.43	344.31	344.59	344.90	316.00
BENT 3	352.33	353.17	353.63	354.27	347.05	347.36	347.63	348.51	348.79	349.10	308.00

PLAN DRIVING OBJECTIVE

ALL PILES SHALL BE PSC, 16 IN. SQ. AND SHALL BE DRIVEN TO A RESISTANCE OF 75 TONS AFTER A MINIMUM TIP ELEVATION OF 302.00 IS ACHIEVED.

SUBSTRUCTURE QUANTITIES

ITEM	BENT 2	BENT 3
CY CLASS AA CONCRETE	116.2	130.7
LB BAR REINF STEEL	20,239	23.056

BRIDGE NO. 4

Kimley-Horn and Associates, Inc.

©, 2012

SUITE 220, 2 SUN COURT
NORCROSS, GEORGIA 30092-2865

GEORGIA
DEPARTMENT OF TRANSPORTATION
PRECONSTRUCTION DIVISION-OFFICE OF BRIDGE DESIGN

BENTS 2 AND 3
RAMP A OVER NORFOLK SOUTHERN RAILWAY
BIBB COUNTY STP00-0000-00(566)

NO SCALE FEBRUARY 2012

REVISIONS	BY	DATE
STIRRUP SPA IN CAP	DLS	12/5/2014

DRAWING NO. 35 - 64
BRIDGE SHEET B4 - 14 OF 18

DESIGNED JSS CHECKED DLS REVIEWED WMD/WEI
DRAWN CAL DESIGN GROUP SWW APPROVED BFR