| STATE | PROJECT NUMBER | SHEET NO. | TOTAL SHEETS |
|---|---|---|---|
| GA. | STP00-0000-00(566) | 77 | 103 |

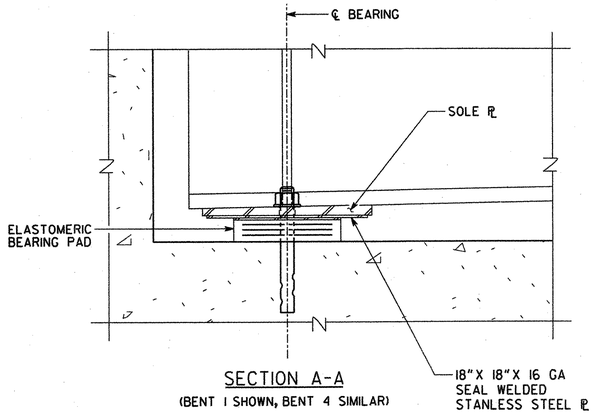


SECTION A-A
(BENT 1 SHOWN, BENT 4 SIMILAR)

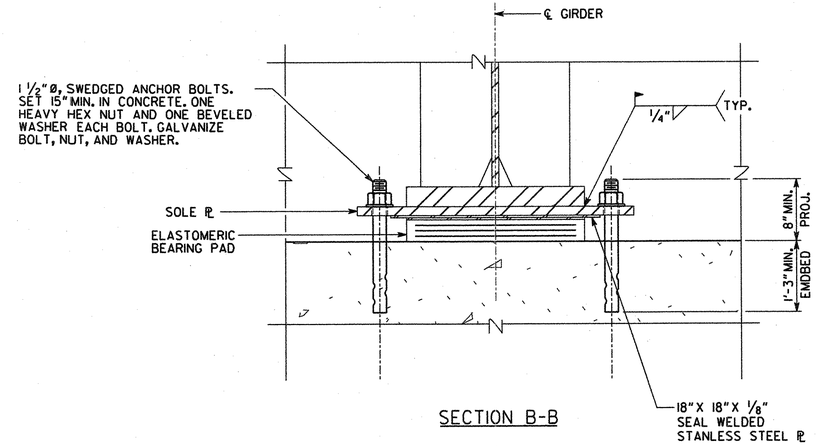


SECTION B-B

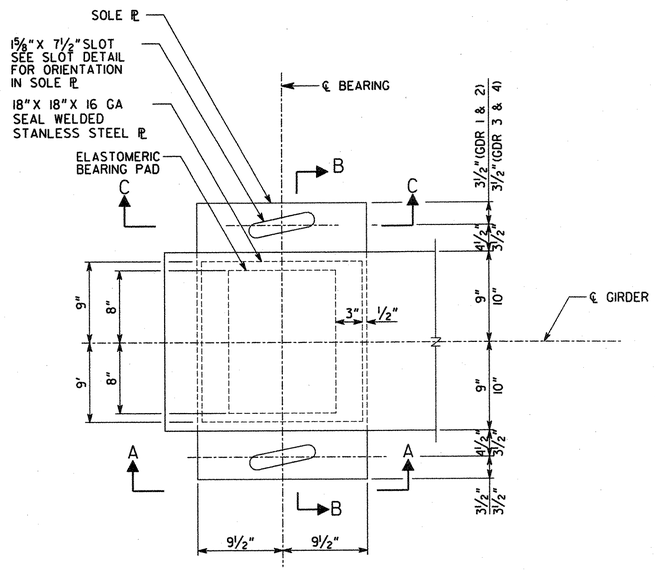


EXPANSION BEARING AT BENTS 1 & 4
(BENT 1 SHOWN, BENT 4 SIMILAR)

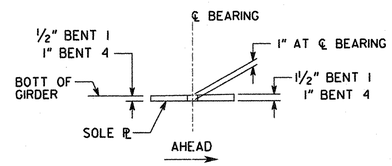


SECTION C-C

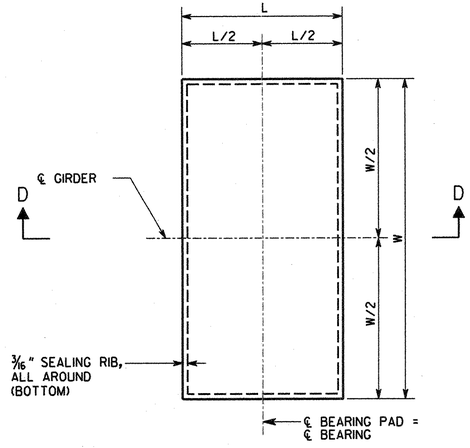


BEARING PAD PLAN

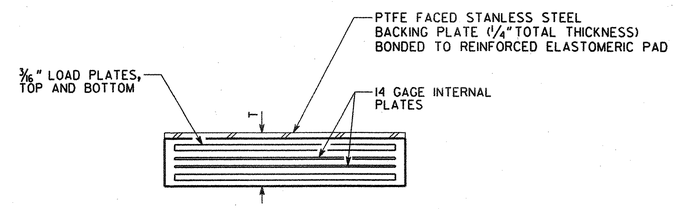


SECTION D-D

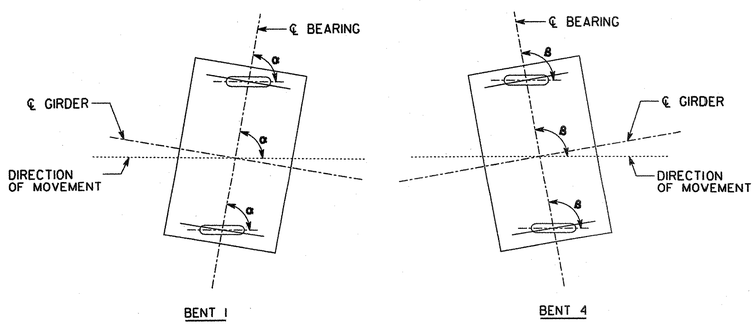


SLOT DETAIL FOR SOLE PLATES

| LAYOUT FOR SOLE PL SLOTS | | |
|---|---|---|
| GIRDER | α | β |
| 1 | 74°-26'-37.6" | 99°-21'-54.4" |
| 2 | 74°-25'-02.6" | 99°-25'-45.6" |
| 3 | 74°-23'-31.8" | 99°-29'-28.9" |
| 4 | 74°-22'-05.0" | 99°-33'-04.5" |

## NOTES

1) BEARING PADS HAVE BEEN DESIGNED ACCORDING TO AASHTO SPECIFICATIONS DIVISION I, SECTION 14.6.6, METHOD A AND SHALL BE FURNISHED IN ACCORDANCE WITH AASHTO SPECIFICATIONS DIVISION II, SECTION 18, BEARINGS.
2) SOLE PLATES SHALL BE ASTM A 709 GRADE 36.
3) STANLESS STEEL PLATES SHALL BE ASTM A167/A264, TYPE 304, WITH A #8 MIRROR FINISH.
4) ANCHOR BOLTS SHALL BE STAINLESS STEEL ASTM A-276, TYPE 304.
5) BEARING PADS SHALL BE MADE OF 60 DUROMETER HARDNESS NEOPRENE, GRADE 2 OR HIGHER.
6) BEARING PADS SHALL HAVE 1/4" COVER ON THE TOP, BOTTOM, AND SIDES.
7) 3/16" LOAD PLATES AND 14 GAGE INTERNAL PLATE(S) SHALL BE ASTM A 709 GRADE 36 OR ASTM A 1011 GRADE 36.
8) NUMBER OF INTERNAL PLATES SHOWN FOR ILLUSTRATION PURPOSES ONLY. THE NUMBER OF INTERNAL PLATE(S) SPECIFIED SHALL BE EQUALLY SPACED BETWEEN LOAD PLATES.
9) USE OF 1 1/2° MOLD DRAFT IS OPTIONAL.
10) SOLE PLATES SHALL NOT BE PAINTED ON SURFACE IN CONTACT WITH ELASTOMERIC BEARING PAD.
11) BOND STANLESS STEEL FACING TO SOLE PLATE WITH AN APPROVED HIGH-TEMPERATURE RESISTANT EPOXY.
12) BOND BEARING PAD TO CONCRETE WITH AN ADHESIVE MEETING THE REQUIREMENTS OF SECTION 886 OF THE GEORGIA DOT SPECIFICATIONS, TYPE III.

| BENT | GIRDER | BEARING PADS | | | | | | | |
|---|---|---|---|---|---|---|---|---|---|
| | | | | | | | DESIGN LOADS (KIPS) | | |
| | | W | L | T | NUMBER OF INTERNAL PLATE(S) | DESIGN SHEAR DEFLECTION | DEAD LOAD | LIVE LOAD (NO IMPACT) | DEAD LOAD + LIVE LOAD |
| 1,4 | 1,2,3,4 | 16" | 12" | 2 3/4" | 2 | 0.91" | 58.1 | 57.5 | 115.6 |

BRIDGE NO. 4

Kimley-Horn and Associates, Inc.
©, 2012
SUITE 220, 2 SUN COURT
NORCROSS, GEORGIA 30092-2865

GEORGIA
DEPARTMENT OF TRANSPORTATION
PRECONSTRUCTION DIVISION-OFFICE OF BRIDGE DESIGN

BEARING DETAILS
RAMP A OVER NORFOLK SOUTHERN RAILWAY
BIBB COUNTY STP00-0000-00(566)

NO SCALE FEBRUARY 2012

DRAWING NO. 35 - 61
BRIDGE SHEET B4 - 11 OF 18

REVISIONS | DATE | BY

DESIGNED JSS | CHECKED DLS | REVIEWED WMD/WEI
DRAWN CAL | DESIGN GROUP SWW | APPROVED BFR

2:42:38 PM 10/02/2008 \\kimley-horn.com\SE_AMT\AMT_Structures\015749001_Sardis Church\04_SB_RampA\Dgn\brg.dgn