VOID

Rdwy. Exc | Fill

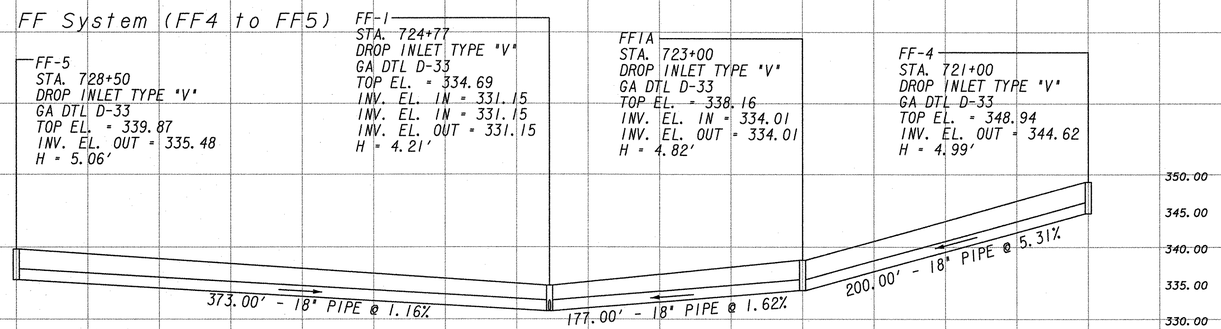


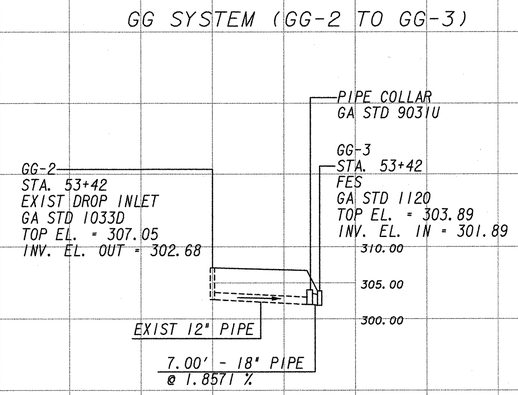


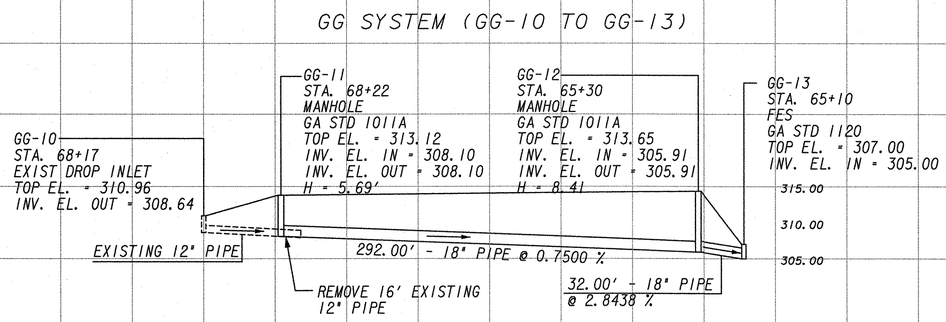


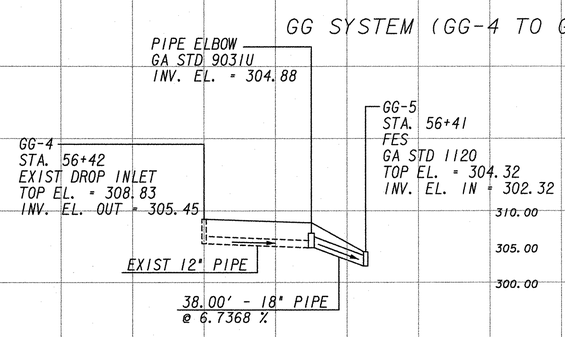


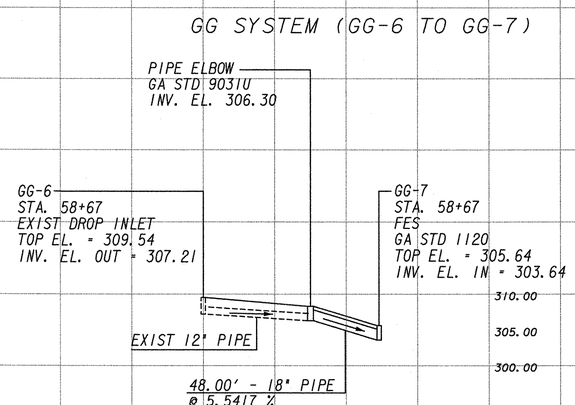


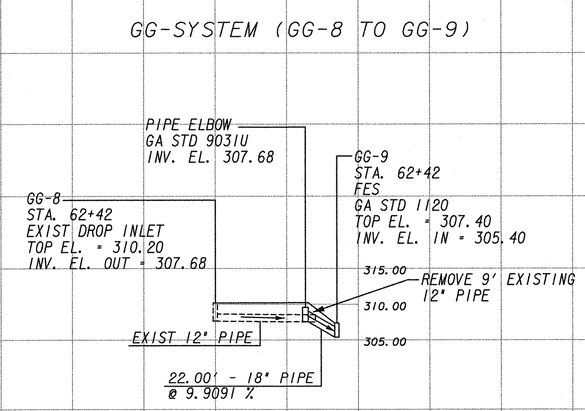


SCALE 1" = 10' VERT.
1" = 50' HORIZ.

DRAINAGE PROFILES

22-18