STATE	PROJECT NUMBER	SHEET NO.	TOTAL SHEETS
GA.	STP00-0000-00(566)	352	1057

VOID

Rdwy. Exc	Fill

EE SYSTEM (EE-9 TO EE-10)

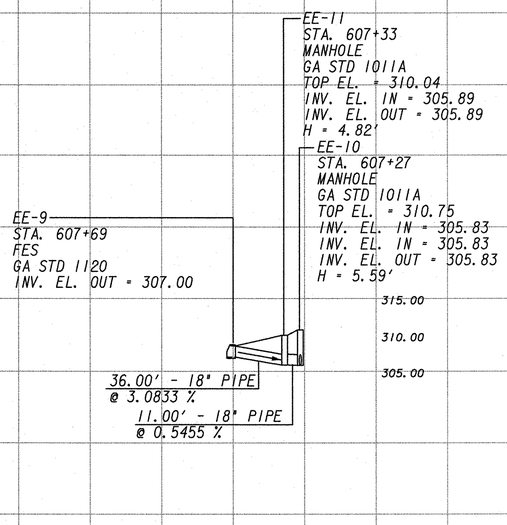

F-SYSTEM (F-1 TO F-8)

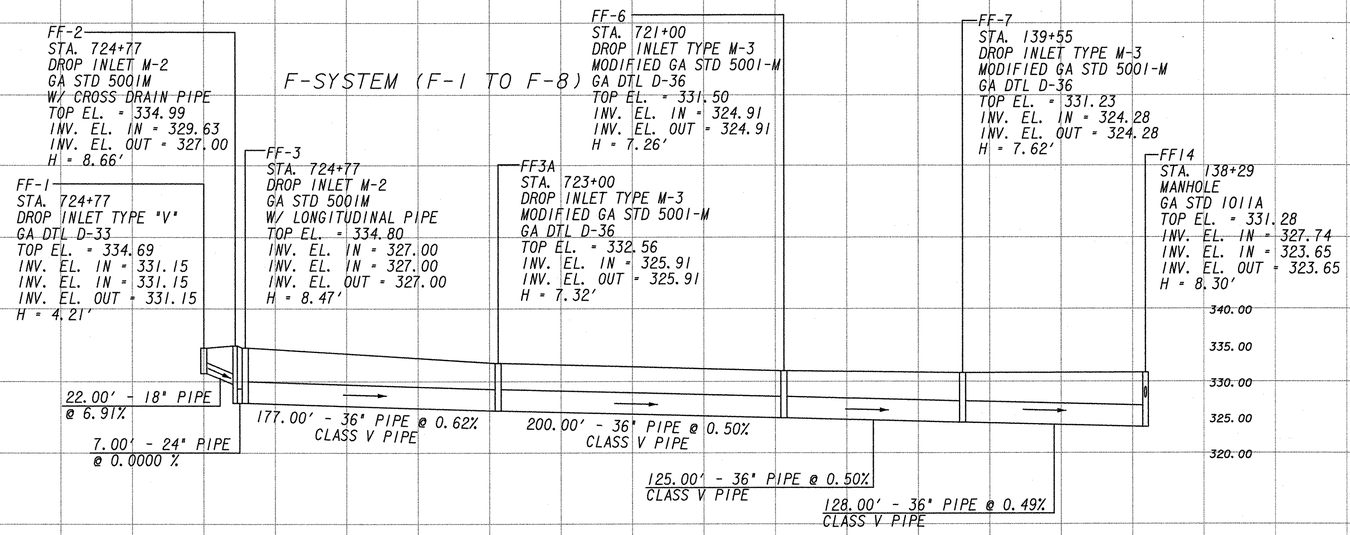

F-SYSTEM (F-10 TO F-3)

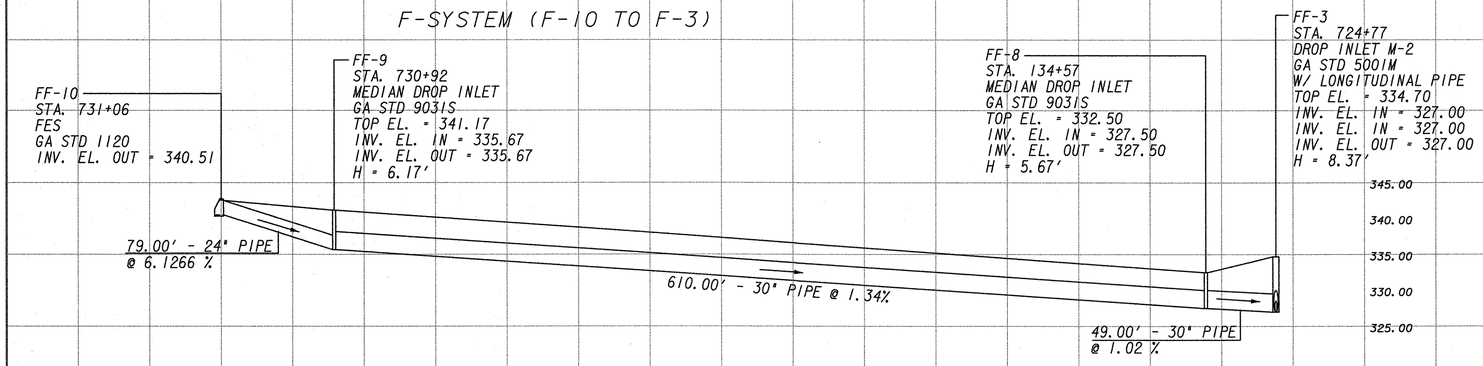

FF-SYSTEM (FF-11 TO FF-0)

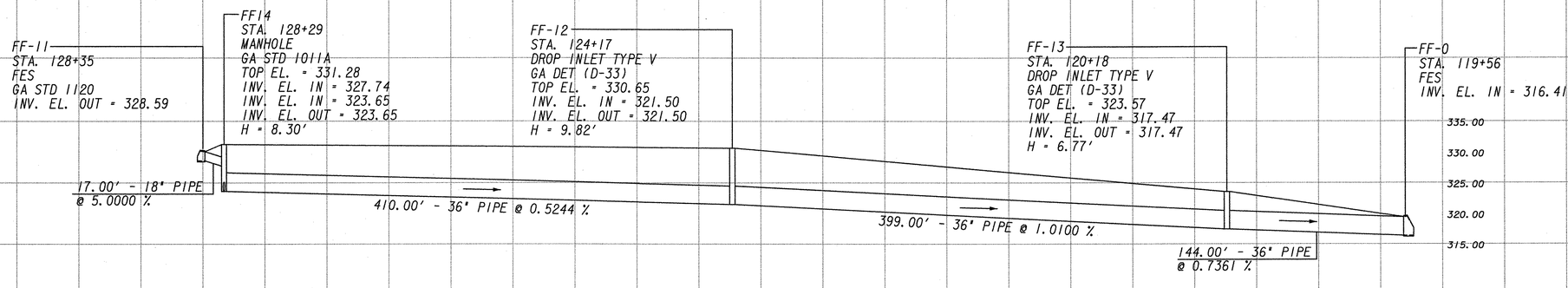

SCALE 1" = 10' VERT.
1" = 50' HORIZ.

DRAINAGE PROFILES

22-17