STATE	PROJECT NUMBER	SHEET NO.	TOTAL SHEETS
GA.	CSNHS-0000-00(335)	179	266

CATCH BASIN (IF CATCH BASIN HAS LONGITUDINAL PIPE OVER 24", SEE DETAILS AT RIGHT.)

NOTE: OPENING FOR PIPE SHALL BE THE OUTSIDE DIAMETER OF THE REQUIRED PIPE PLUS 1" MIN. OPENING SHALL HAVE CORRUGATIONS.

NOTE: FOR ALL CATCH BASINS:
1/2" EXPANSION JOINT MATERIAL SHALL BE PLACED AROUND THE CATCH BASIN WHERE SIDEWALK OR MEDIAN PAVEMENT IS PLACED ADJACENT TO THE CATCH BASIN.

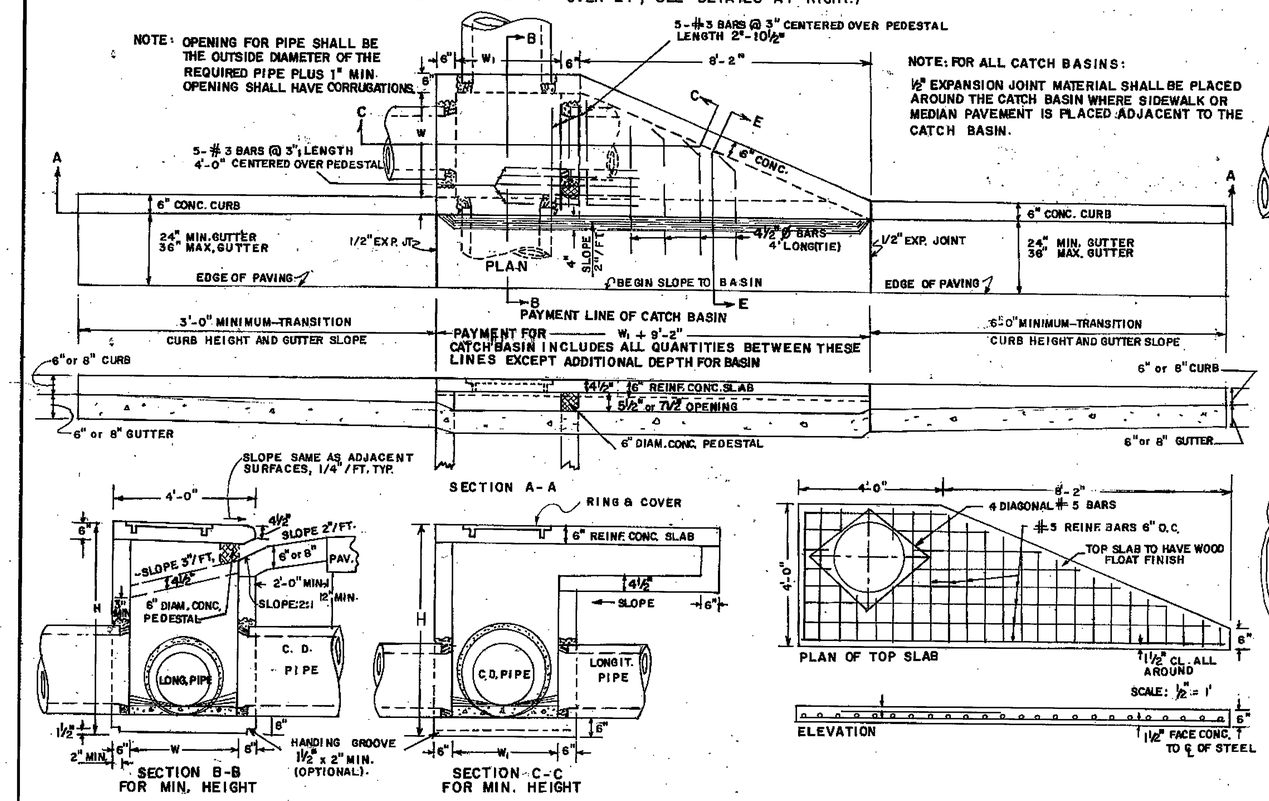

CATCH BASIN (TYPICAL FOR CATCH BASIN WITH LONGITUDINAL PIPE OVER 24")

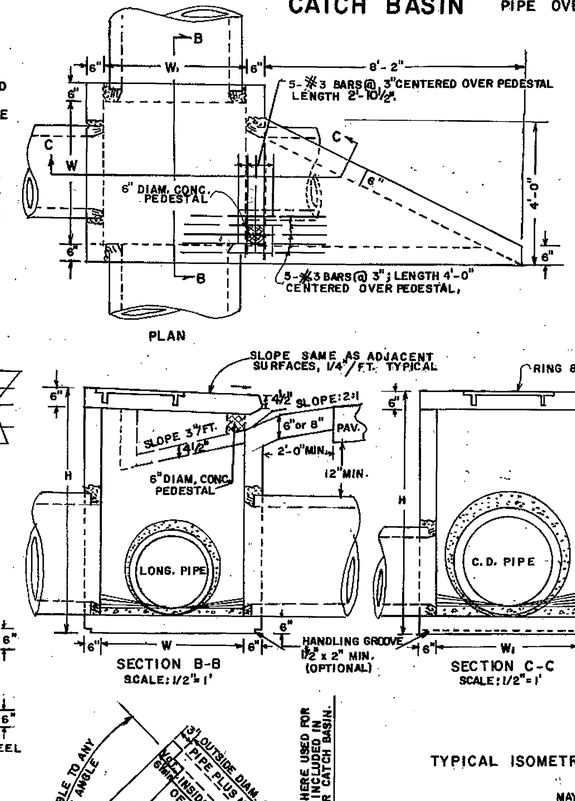

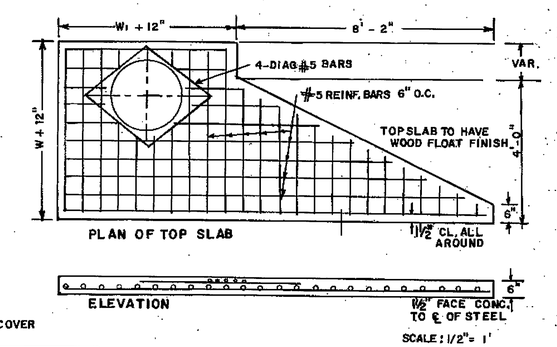

REINFORCING - ISOMETRIC VIEW

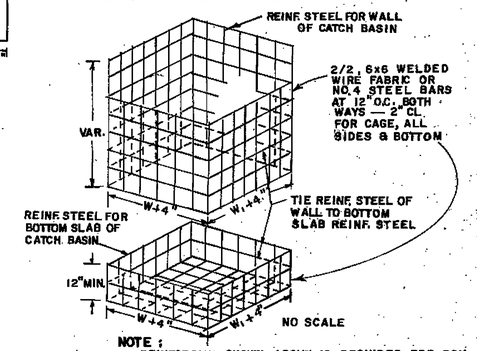

NOTE: REINFORCING SHOWN ABOVE IS REQUIRED FOR BOX SHAPED BASIN. REINFORCING FOR CIRCULAR PRECAST ALTERNATE SHALL BE ACCORDING TO STD. 1040.

ALL JOINTS BETWEEN PRECAST RISERS OR BETWEEN PRECAST BASE AND RISER WILL BE KEYED. KEYED JOINTS SHOWN ARE TYPICAL AND MAY BE VARIED.

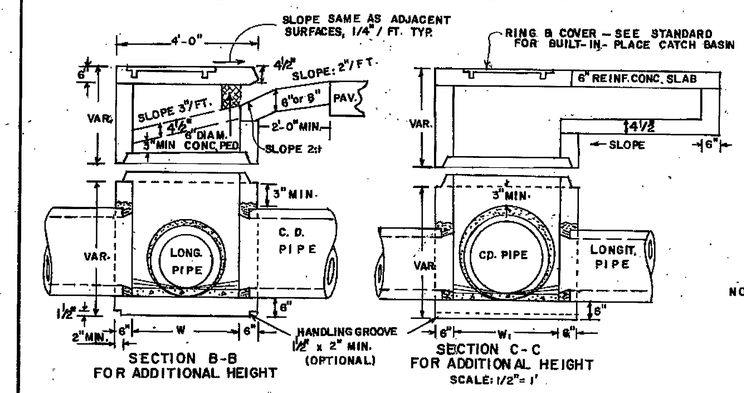

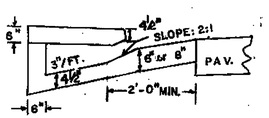

DETAIL OF TOP SLAB; REINF. STEEL & CLEARANCES REQUIRED

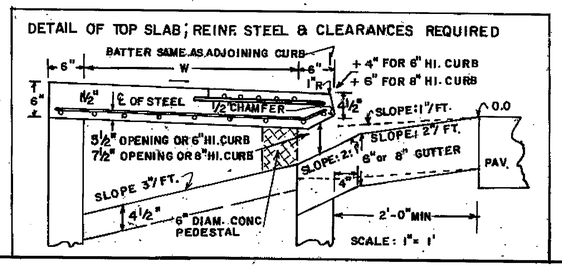

DETAIL AND ARRANGEMENT OF LADDER BARS

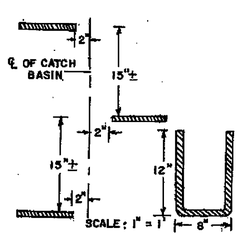

NOTE:
NUMBER AND LOCATION OF LADDER BARS IN CATCH BASIN TO BE AS DIRECTED BY THE ENGINEER.
M.H. STEPS LISTED IN GA. D.O.T. LABORATORY'S QUALIFIED PRODUCTS LIST MAY BE SUBSTITUTED.

METHOD OF CONNECTING PIPE (WHERE CONCRETE PIPE HAS TO BE CUT)

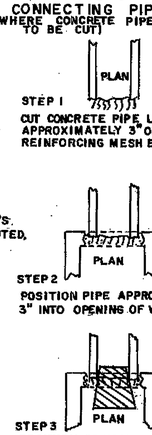

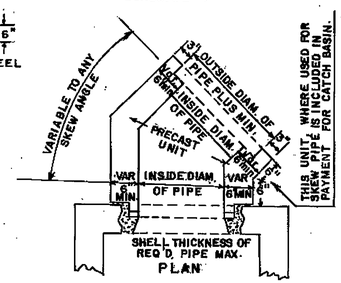

A METHOD OF CONNECTING SKEWED PIPE

IF THIS SWIVEL SECTION SLAB IS USED TO REDUCE THE W AND W_1 DIMENSIONS, INCREASE THE MIN. THICKNESS TO 9" AND USE REINF. STEEL. SEE DETAIL BELOW.

DETAIL FOR REINFORCED STEEL

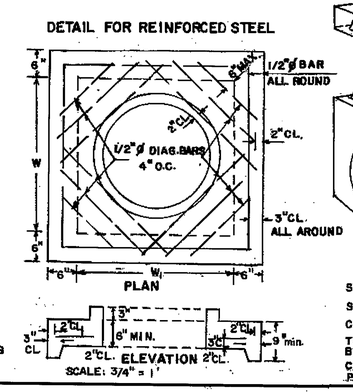

TYPICAL ISOMETRIC VIEW

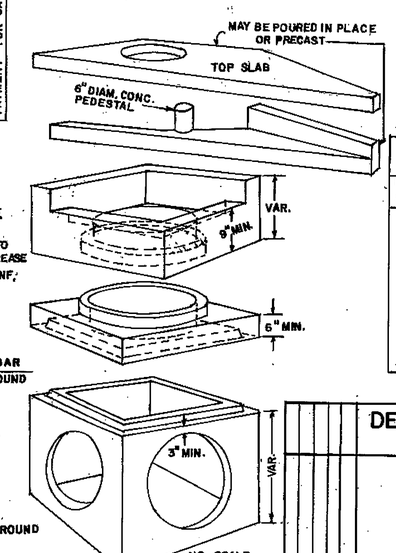

SWIVEL SECTION MAY BE USED WHERE SKEWED PIPE CONNECTS TO PRECAST CONCRETE BOX.
THE ABOVE VIEW DEPICTS PRECAST BOX. SEE SEPARATE STANDARDS FOR CIRCULAR ALTERNATE OR BUILT-IN-PLACE BOX.

DIMENSIONS FOR CATCH BASINS

PIPE SIZE	NORMAL W OR W_1	MIN H
12"	3'-0"	4'-4"
15"	3'-0"	4'-7"
18"	3'-0"	4'-10"
24"	3'-0"	5'-6"
30"	3'-6"	6'-2"
36"	4'-0"	6'-10"
42"	5'-0"	7'-4"
48"	5'-0"	8'-0"
54"	6'-0"	8'-6"
60"	6'-0"	9'-2"

NOTE:
DIMENSIONS FOR CATCH BASINS ARE BASED UPON TYPICAL OUTSIDE DIAMETERS OF CONCRETE PIPES AND MAY BE VARIED IF CONDITIONS PERMIT AND THE ENGINEER APPROVES. W & W_1 DIMENSIONS DO NOT HAVE TO BE EQUAL.

ALTERNATE:
BUILT-IN-PLACE, PRECAST BOX, AND/OR PRECAST CIRCULAR UNITS WITH THE REQUIRED ADAPTERS, REDUCERS, FITTINGS, CONNECTIONS, ETC. MAY BE USED IN COMBINATIONS.

NOTE:
FOR RING & COVER DETAILS AND OTHER DETAILS NOT SHOWN, SEE STANDARD 1033D FOR BUILT-IN-PLACE CATCH BASIN.

DEPARTMENT OF TRANSPORTATION
STATE OF GEORGIA

STANDARD PRECAST CATCH BASINS

FOR USE WITH CURB (6" OR 8" HT.) & GUTTER

SCALE AS SHOWN — REV. & REDR., SEPT., 1982

REV. & REDR. RMU
TRA GME
CHK RKC

(SUBMITTED) Floyd E. Hardy
STATE ROAD & AIRPORT DESIGN ENGR.
(APPROVED) Thomas D. Moreland
STATE HIGHWAY ENGINEER

NUMBER 1033D PRECAST

FORM EF3