STATE	PROJECT NUMBER	SHEET NO.	TOTAL SHEETS
GA.	CSNHS-0000-00(535)	165	266

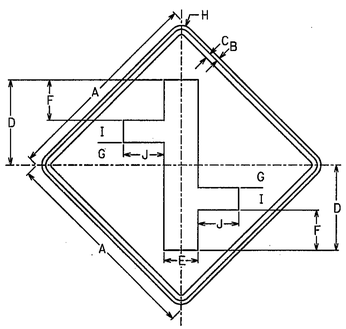

W552-1

SIGN	DIMENSIONS (INCHES)									
	A	B	C	D	E	F	G	H	I	J
STD & MIN	30	1/2	3/4	12 1/2	5	5	3 1/4	1 7/8	3 1/4	6
EXPWY	36	5/8	7/8	15	6	7	4	2 1/4	4	7
FWY	48	7/8	1 1/4	20	8	9 1/2	5 1/4	3	5 1/4	9 1/2

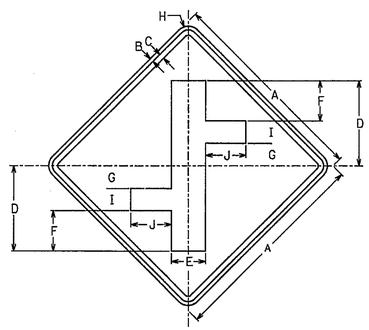

W552-2

SIGN	DIMENSIONS (INCHES)									
	A	B	C	D	E	F	G	H	I	J
STD & MIN	30	1/2	3/4	12 1/2	5	6	3 1/4	1 7/8	3 1/4	6
EXPWY	36	5/8	7/8	15	6	7	4	2 1/4	4	7
FWY	48	7/8	1 1/4	20	8	9 1/2	5 1/4	3	5 1/4	9 1/2

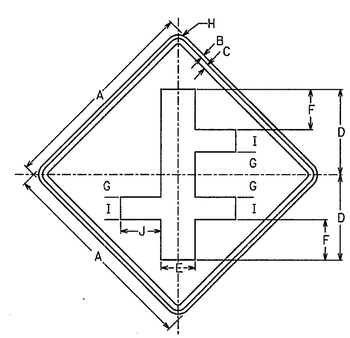

W552-3

SIGN	DIMENSIONS (INCHES)									
	A	B	C	D	E	F	G	H	I	J
STD & MIN	30	1/2	3/4	12 1/2	5	6	3 1/4	1 7/8	3 1/4	6
EXPWY	36	5/8	7/8	15	6	7	4	2 1/4	4	7
FWY	48	7/8	1 1/4	20	8	9 1/2	5 1/4	3	5 1/4	9 1/2

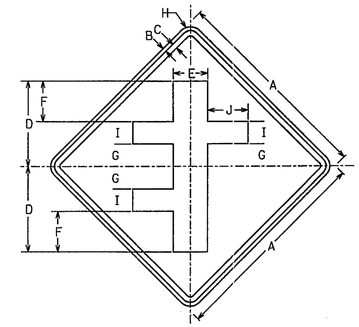

W552-4

SIGN	DIMENSIONS (INCHES)									
	A	B	C	D	E	F	G	H	I	J
STD & MIN	30	1/2	3/4	12 1/2	5	6	3 1/4	1 7/8	3 1/4	6
EXPWY	36	5/8	7/8	15	6	7	4	2 1/4	4	7
FWY	48	7/8	1 1/4	20	8	9 1/2	5 1/4	3	5 1/4	9 1/2

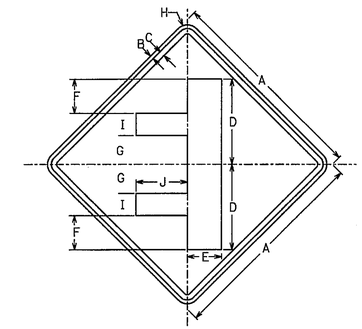

W552-5

SIGN	DIMENSIONS (INCHES)									
	A	B	C	D	E	F	G	H	I	J
STD & MIN	30	1/2	3/4	12 1/2	5	5	4 1/4	1 7/8	3 1/4	8
EXPWY	36	5/8	7/8	15	6	6	5	2 1/4	4	10
FWY	48	7/8	1 1/4	20	8	8	6 3/4	3	5 1/4	12

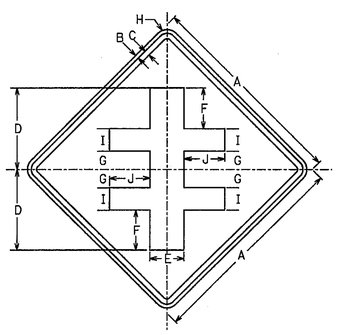

W552-6

SIGN	DIMENSIONS (INCHES)									
	A	B	C	D	E	F	G	H	I	J
STD & MIN	30	1/2	3/4	12 1/2	5	5	3 1/4	1 7/8	3 1/4	6
EXPWY	36	5/8	7/8	15	6	7	4	2 1/4	4	7
FWY	48	7/8	1 1/4	20	8	9 1/2	5 1/4	3	5 1/4	9 1/2

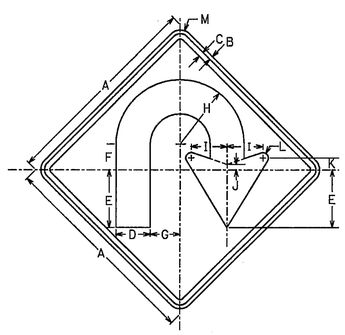

W551-1

SIGN	DIMENSIONS (INCHES)												
	A	B	C	D	E	F	G	H	I	J	K	L	M
STD & MIN	30	1/2	3/4	5	8 1/2	3 3/4	4 3/8	9 3/8	5 3/4	3/4	1 5/8	3/4	1 7/8
EXPWY	36	5/8	7/8	6	10	4 1/2	5 1/4	11 1/4	6 7/8	15/16	2 3/16	15/16	2 1/4
FWY	48	7/8	1 1/4	8	13 1/2	6	7	15	8 7/16	1 1/4	2 3/4	1 1/4	3

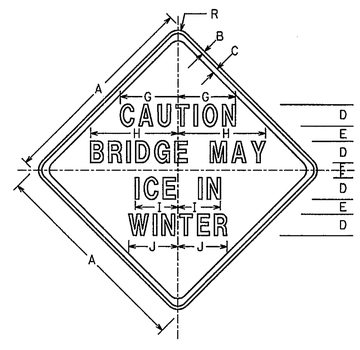

W560-1

SIGN	DIMENSIONS (INCHES)										
	A	B	C	D	E	F	G	H	I	J	R
MIN & STD	30	1/2	3/4	3D	2 3/16	1 3/32	8	12 1/2	6	7	1 7/8
EXPWY	36	5/8	7/8	4D	2 5/8	1 5/16	11	16 1/2	8	9	2 1/4
FWY	48	3/4	1 1/4	5D	3 1/2	1 3/4	13 1/2	20 1/2	10	11 1/2	3

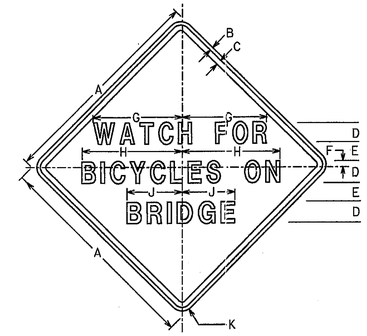

W560-2

SIGN	DIMENSIONS (INCHES)										
	A	B	C	D	E	F	G	H	J	K
MIN & STD	30	1/2	3/4	3C	1 1/2	1 3/32	9 1/2	11 1/2	6	1 7/8
EXPWY	36	5/8	7/8	4C	3 1/4	2	13	15	7 1/2	2 1/4

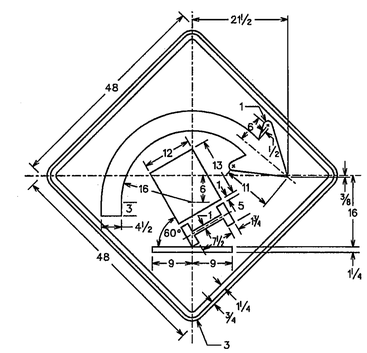

W560-3

SIGNS SHALL HAVE YELLOW REFLECTORIZED BACKGROUNDS
WITH BLACK LEGENDS, BORDERS, AND SYMBOLS.

DATE	REVISIONS

GEORGIA DEPARTMENT OF TRANSPORTATION
OFFICE OF TRAFFIC SAFETY & DESIGN

DETAILS OF
WARNING SIGNS

NO SCALE JANUARY 2000

PCBOTB