2/7/2012 Tue Feb 07 08:31:10 2012 decook	\\gdot-dsn1\gocfg\resources\Gdot2007_Klp.tbl	C:\dgn\000535 Grady\0000535TY01.dgn	STATE	PROJECT NUMBER	SHEET NO.	TOTAL SHEETS
			GA	CSNHS-0000-00(535)	6	266

TS-4

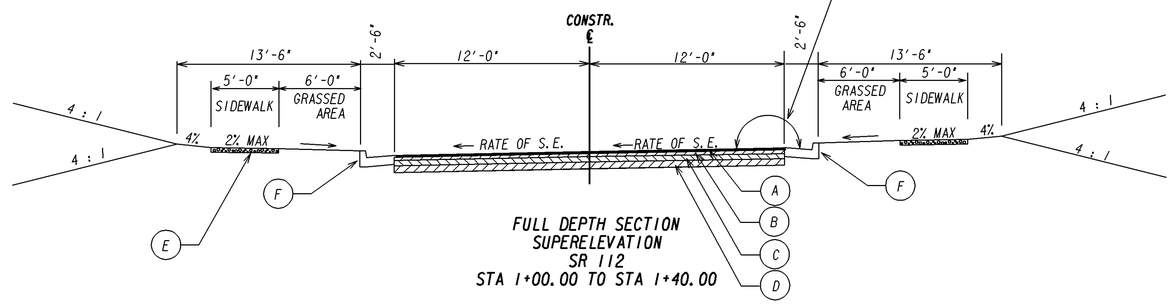

FULL DEPTH SECTION
SUPERELEVATION
SR 112
STA 1+00.00 TO STA 1+40.00

SLOPE CONTROLS - FEET		
SLOPE	CUT BACKSLOPE	FILL
4 : 1	0-3'	0-6'
3 : 1	--	--
2 : 1	> 3'	> 6'

NOTE:
CUT SLOPES MAY BE ADJUSTED AS DIRECTED BY THE ENGINEER.
FILL SLOPES STEEPER THAN 4:1 WILL REQUIRE GUARDRAIL.

(A) 165 LBS/SQ YD RECYCLED ASPH CONC 12.5 mm SUPERPAVE, GP 2 ONLY, INCL BITUM MATL & H LIME

(B) 220 LBS/SQ YD RECYCLED ASPH CONC 19 mm SUPERPAVE, GP 1 OR 2, INCL BITUM MATL & H LIME

(C) 550 LBS/SQ YD RECYCLED ASPH CONC 25 mm SUPERPAVE, GP 1 OR 2, INCL BITUM MATL & H LIME

(D) GR AGGR BASE, 8 INCH, INCL MATL

(E) CONC SIDEWALK, 4 IN

(F) CONC CURB & GUTTER, 6 IN X 30 IN, TP 2

TS-5

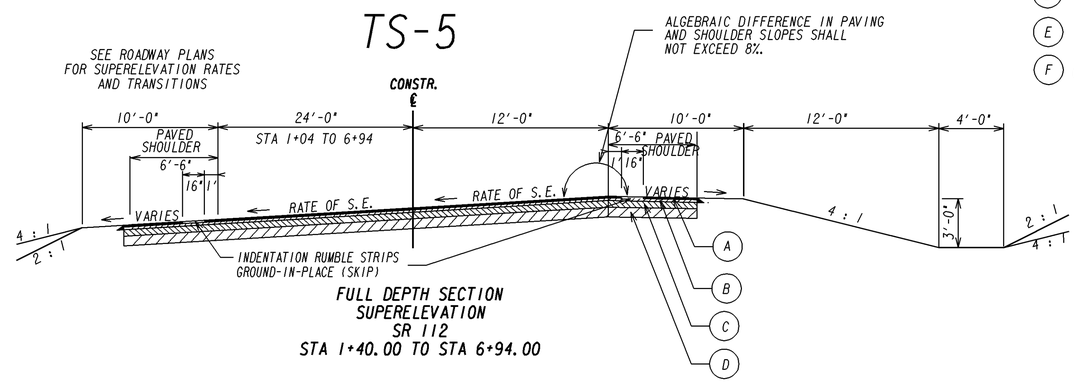

FULL DEPTH SECTION
SUPERELEVATION
SR 112
STA 1+40.00 TO STA 6+94.00

TS-6

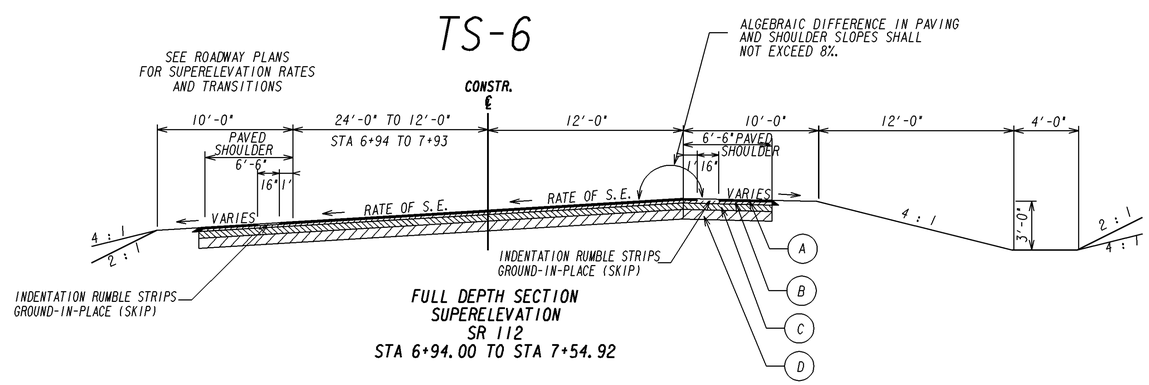

FULL DEPTH SECTION
SUPERELEVATION
SR 112
STA 6+94.00 TO STA 7+54.92

ALLOWABLE RANGES TABLE

FOR THIS PROJECT, CROSS SLOPES THAT ARE ADJUSTED TO 'BEST FIT' EXISTING PAVEMENT SLOPES ARE SUBJECT TO THE FOLLOWING LIMITS:

A. NORMAL CROWN

SECTION WITH GRADES 0.5% OR GREATER	SECTION WITH GRADES LESS THAN 0.5%
1.50% - MINIMUM	1.56 % - MINIMUM
2.00% - DESIRABLE	2.00% - DESIRABLE
2.50% - MAXIMUM	3.00% - MAXIMUM

B. SUPERELEVATION RATE

S.E. RATE SHOWN ON PLANS OR SE RATE EXISTING IN FIELD, WHICHEVER IS GREATER.

C. SUPERELEVATION TRANSITION LENGTH (LENGTH FROM FLAT POINT TO FULL SE)

	RATE OF CHANGE	CORRESPONDING DIFFERENCE IN GRADE BETWEEN PIVOT POINT AND EDGE OF PAVEMENT
MINIMUM	1:150	0.67%
DESIRABLE	1:200	0.50%
MAXIMUM	1:300	0.33%

LENGTH SHALL BE SET TO AVOID CREATING A FLAT GUTTER GRADE ON LOW SIDE AND TO AVOID FLAT CROSS SLOPES AT OR NEAR THE LOW POINT OF VERTICAL CURVES.

D. POSITIONING OF SUPERELEVATION TRANSITION LENGTH ON SIMPLE CURVES

50% OF TRANSITION INSIDE CURVE - MAXIMUM
33% OF TRANSITION INSIDE CURVE - DESIRABLE
20% OF TRANSITION INSIDE CURVE - MINIMUM

NOTE: CROWN WIPE-OUT SHALL BE AT THE SAME RATE AS THE SE TRANSITION.

E. SMOOTHING OF BREAKS IN EDGE PROFILE AT BEGIN AND END OF TRANSITION SHALL BE ACCOMPLISHED BY VERTICAL CURVE WITH A MINIMUM LENGTH (IN FEET) EQUAL TO THE SPEED DESIGN (IN MPH) / 5.5.

GEORGIA
DEPARTMENT OF TRANSPORTATION

REVISION DATES		

STATE OF GEORGIA
DEPARTMENT OF TRANSPORTATION
OFFICE: DISTRICT 4 DESIGN
TYPICAL SECTIONS

DRAWING No.
5-002

1/5/2009 GPLN