STATE	PROJECT NUMBER	SHEET NO.	TOTAL SHEETS
GA.	EDS-0000-00(346)	697	999

DIMENSION "D" IS MEASURED FROM TOP OF SLAB TO TOP OF BEAMS AT CENTERLINE BEARING. VARY "D" BETWEEN BEARINGS TO COMPENSATE FOR DEAD LOAD DEFLECTION AND VERTICAL CURVE. MAINTAIN A CONSTANT SLAB THICKNESS OF 7½" BETWEEN BEAMS AND IN THE OVERHANGS.

SPAN	"D"
1	11¾"
2 THRU 7	11¼"
11 & 12	11⅝"

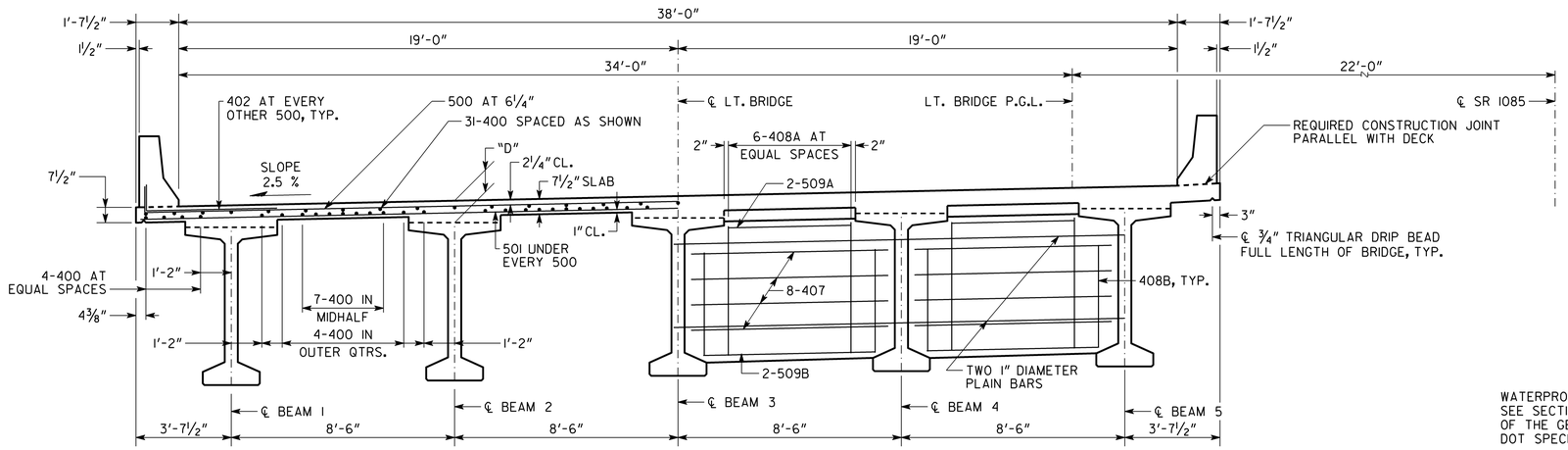

HALF SECTION THRU SLAB
LOOKING AHEAD
(LEFT BRIDGE SHOWN, RIGHT BRIDGE SIMILAR)

HALF SECTION THRU DIAPHRAGM
LOOKING AHEAD
(LEFT BRIDGE SHOWN, RIGHT BRIDGE SIMILAR)

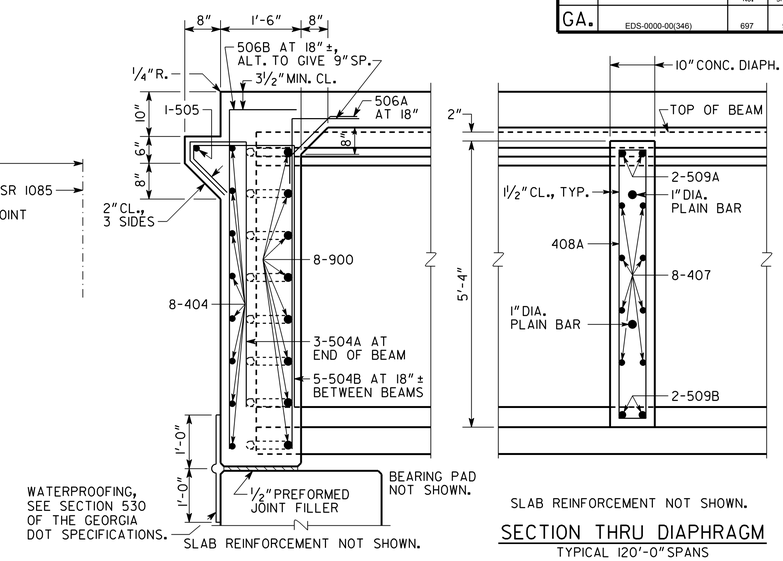

SECTION AT ENDWALL
BENT 1 (BENT 13 SIMILAR)

SECTION THRU DIAPHRAGM
TYPICAL 120'-0" SPANS

NOTES:

1. MAINTAIN 2" MINIMUM CLEARANCE ON ALL REINFORCEMENT UNLESS OTHERWISE NOTED.
2. DO NOT PLACE DECK DRAINS IN SPANS 7 THROUGH 11.

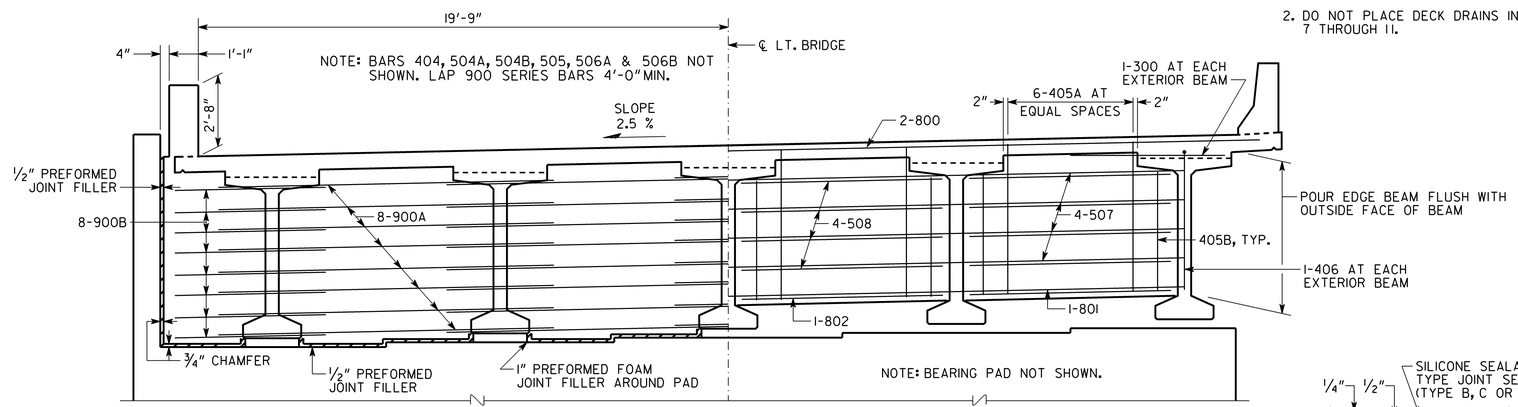

HALF SECTION THRU ENDWALL
LOOKING AHEAD
(LEFT BRIDGE SHOWN, RIGHT BRIDGE SIMILAR)

HALF SECTION THRU EDGE BEAM
LOOKING AHEAD
(LEFT BRIDGE SHOWN, RIGHT BRIDGE SIMILAR)

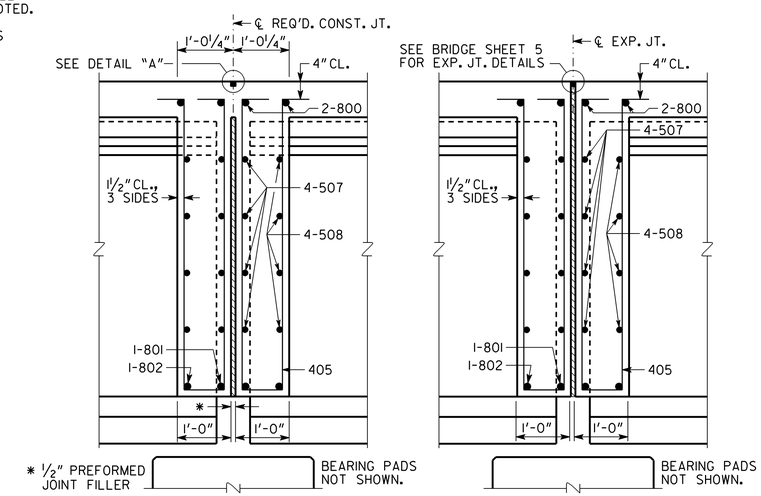

SECTION THRU EDGE BEAM
BENTS 2,4,6 & 12

SECTION THRU EDGE BEAM
BENTS 3, 5 & 7

BRIDGE NO. 4 LEFT & RIGHT

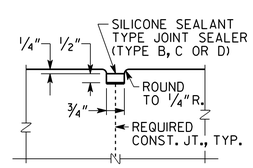

DETAIL "A"

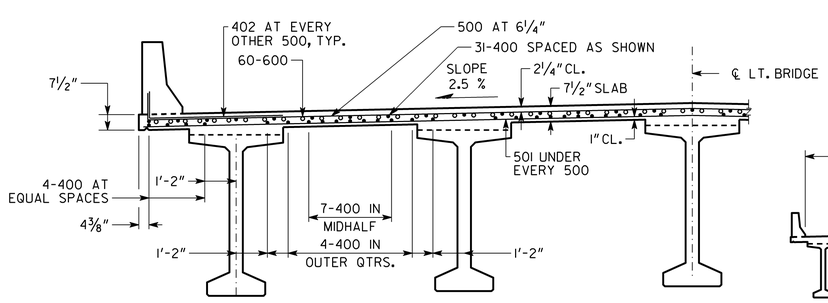

HALF SECTION THRU SLAB AT INTERMEDIATE BENT
LOOKING AHEAD
(LEFT BRIDGE SHOWN, RIGHT BRIDGE SIMILAR)

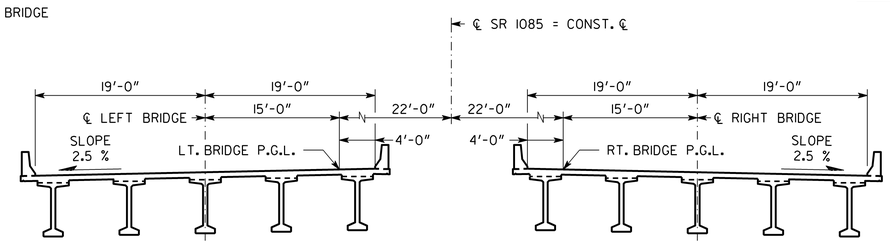

DECK SECTION SCHEMATIC
LOOKING AHEAD

GEORGIA
DEPARTMENT OF TRANSPORTATION
ENGINEERING DIVISION-OFFICE OF BRIDGES AND STRUCTURES

DECK SECTION - 120'-0" SPANS
SR 1085 (FALL LINE FREEWAY)
OVER OCONEE RIVER
BALDWIN COUNTY EDS00-0000-00(346)

NO SCALE AUGUST 2010

DRAWING NO. 35-80
BRIDGE SHEET 7 OF 21

DATE	REVISIONS	BY

DESIGNED DEP | CHECKED SKG/JTM | REVIEWED WMD/WEI
DRAWN KHB | DESIGN GROUP IAB | APPROVED PVL

B0000346BR 4 LT & RT.DGN