STATE	PROJECT NUMBER	SHEET NO.	TOTAL SHEETS
GA.	EDS-0000-00(346)	660	999

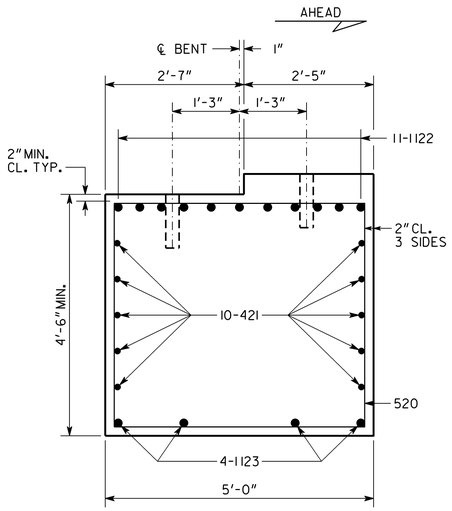

SECTION A-A

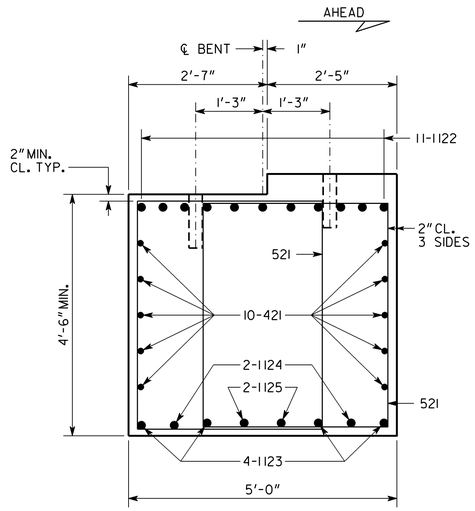

SECTION B-B

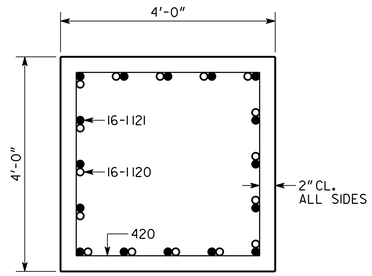

SECTION C-C

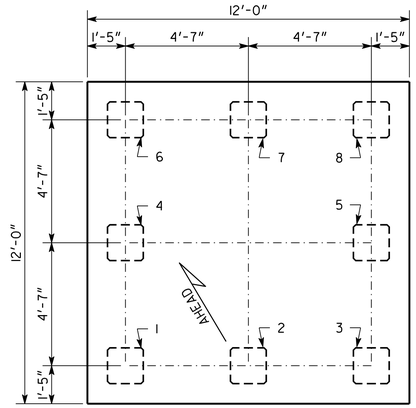

PILE LAYOUT

BRIDGE NO. 2 LT. & RT.

GEORGIA
DEPARTMENT OF TRANSPORTATION
ENGINEERING DIVISION-OFFICE OF BRIDGES AND STRUCTURES

REVISIONS | DATE | BY

INTERMEDIATE BENT 2 LEFT & RIGHT
SR 1085 (FALL LINE FREEWAY)
OVER LITTLE BLACK CREEK
BALDWIN-WILKINSON COS. EDS00-0000-00(346)

NO SCALE — AUGUST 2010

DRAWING NO. 35-43
BRIDGE SHEET 17 OF 27

DESIGNED JTM — CHECKED IAB — REVIEWED WMD/WEI
DRAWN KHB — DESIGN GROUP IAB — APPROVED PVL

B0000346 BR 2 LT & RT.DGN