STATE	PROJECT NUMBER	SHEET NO.	TOTAL SHEETS
GA.	EDS-0000-00(346)	659	999

VOID

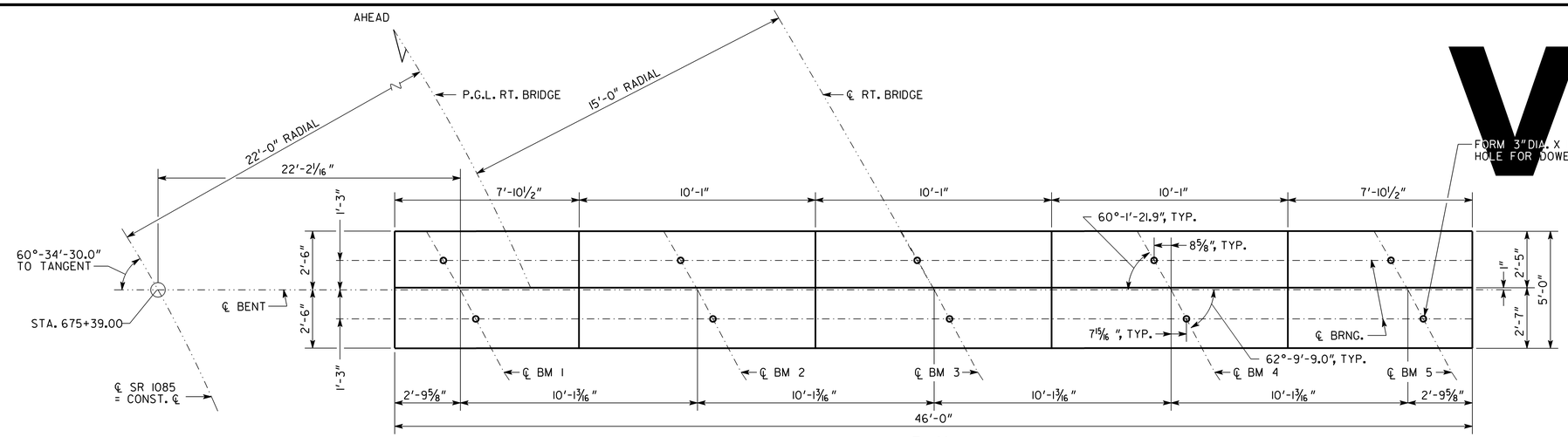

PLAN

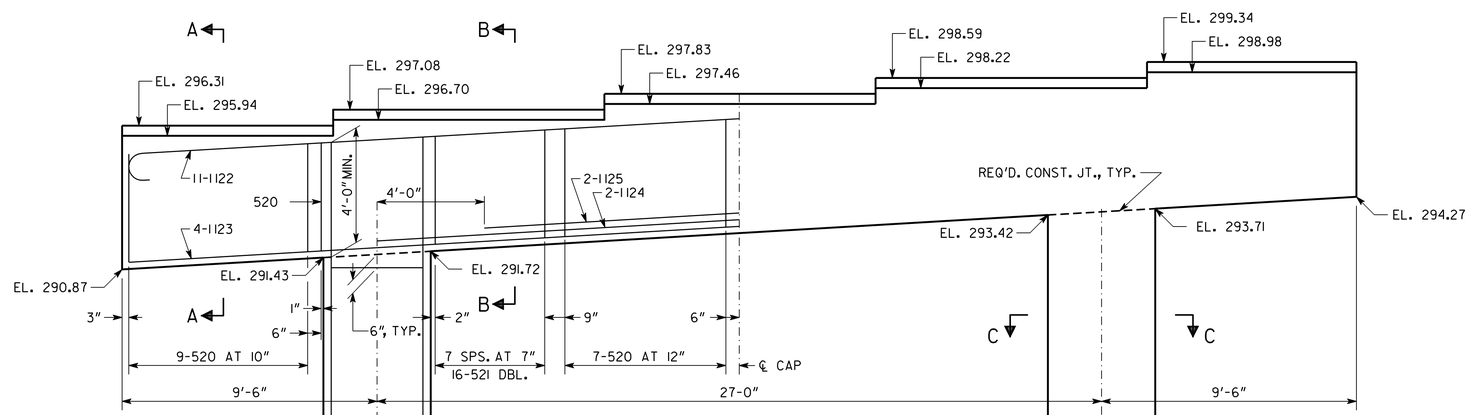

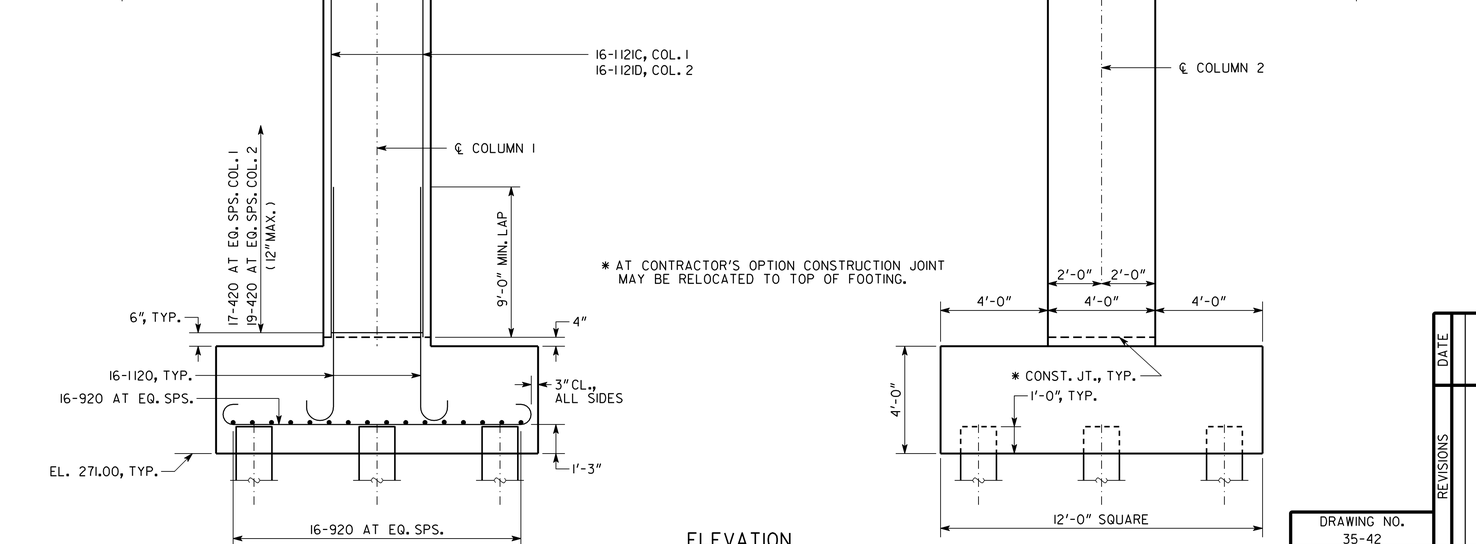

ELEVATION
LOOKING AHEAD

NOTES:

1. MAINTAIN 2" CL. ON ALL REINFORCEMENT UNLESS OTHERWISE NOTED.
2. BENT CAP REINFORCEMENT IS SYMMETRICAL ABOUT ℄ CAP.
3. 421 BARS NOT SHOWN IN ELEVATION VIEW.
4. 520 BARS MAY BE SHIFTED TO MISS THE DOWEL BAR HOLES.

ALL PILES SHALL BE 16 IN. SQ. PSC

PLAN DRIVING OBJECTIVE

ALL PILES SHALL BE DRIVEN TO A DRIVING RESISTANCE OF 82 TONS AFTER A MINIMUM TIP ELEVATION OF 250.0 IS ACHIEVED.

SUBSTRUCTURE QUANTITIES	
ITEM	BENT 2 RIGHT
CU YD CLASS "AA" CONCRETE	105.5
LB BAR REINFORCEMENT STEEL	14658

BRIDGE NO. 2 RT.

GEORGIA
DEPARTMENT OF TRANSPORTATION
ENGINEERING DIVISION-OFFICE OF BRIDGES AND STRUCTURES

INTERMEDIATE BENT 2 RIGHT
SR 1085 (FALL LINE FREEWAY)
OVER LITTLE BLACK CREEK
BALDWIN-WILKINSON COS. EDS00-0000-00(346)

NO SCALE — AUGUST 2010

DESIGNED JTM — CHECKED IAB — REVIEWED WMD/WEI
DRAWN KHB — DESIGN GROUP IAB — APPROVED PVL

REVISIONS — DATE — BY

DRAWING NO. 35-42
BRIDGE SHEET 16 OF 27

B0000346 BR 2 LT & RT.DGN