STATE	PROJECT NUMBER	SHEET NO.	TOTAL SHEETS
GA.	EDS-0000-00(346)	656	999

VOID

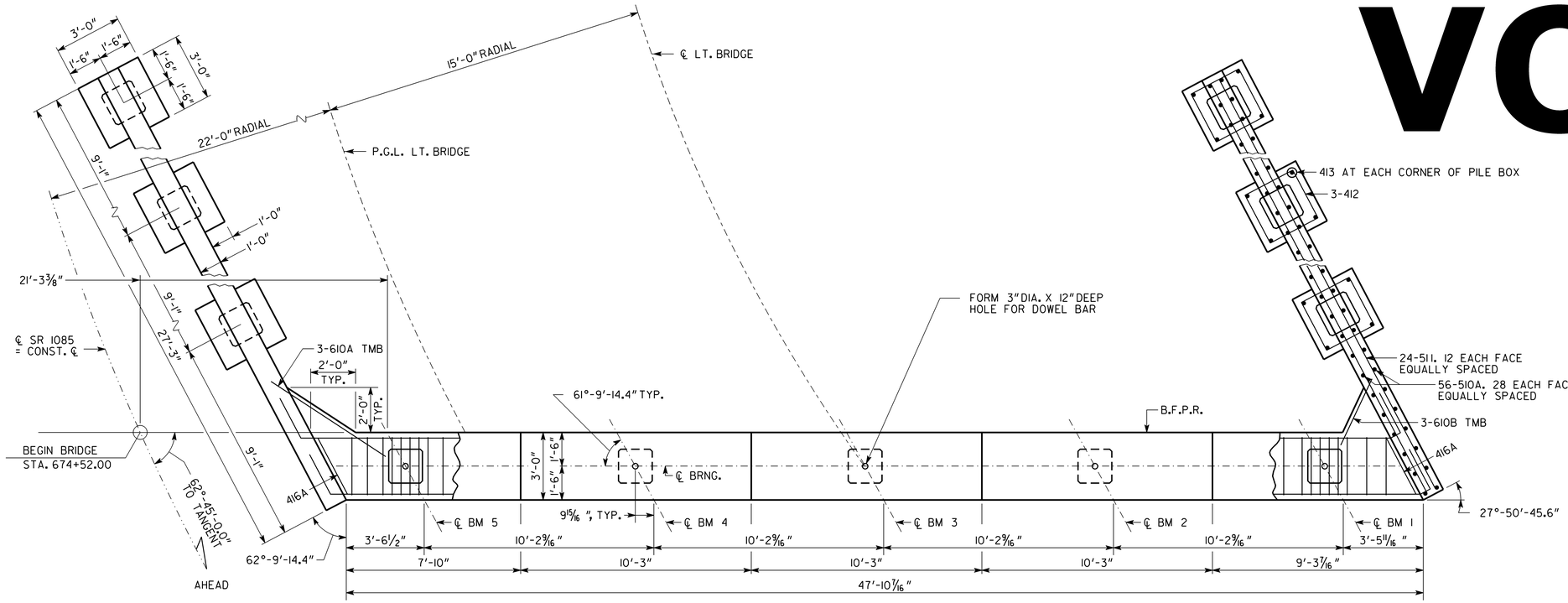

PLAN

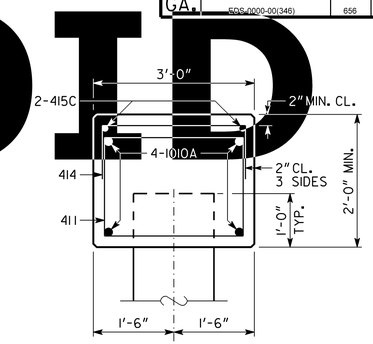

SECTION A-A

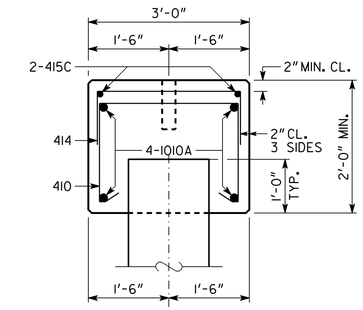

SECTION B-B

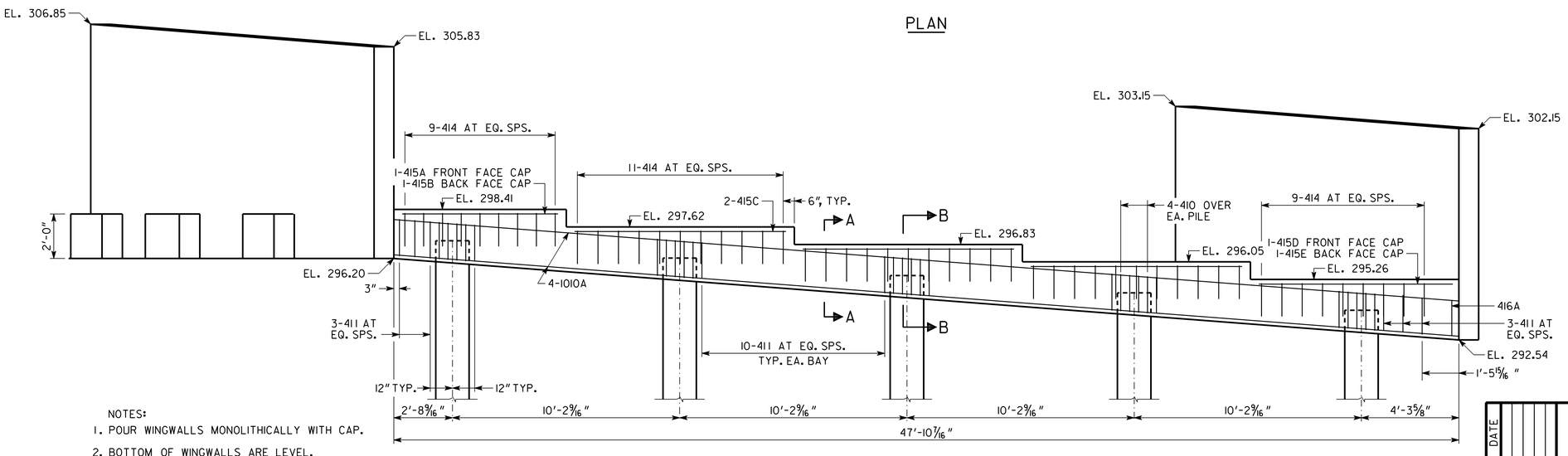

ELEVATION
LOOKING BACK

ALL PILES SHALL BE 18 IN. SQ. PSC

PLAN DRIVING OBJECTIVE

ALL PILES SHALL BE DRIVEN TO A DRIVING RESISTANCE OF 95 TONS AFTER A MINIMUM TIP ELEVATION OF 250.0 IS ACHIEVED.

SUBSTRUCTURE QUANTITIES	
ITEM	BENT 1 LEFT
CU YD CLASS "AA" CONCRETE	35.7
LB BAR REINFORCEMENT STEEL	4253

NOTES:

1. POUR WINGWALLS MONOLITHICALLY WITH CAP.
2. BOTTOM OF WINGWALLS ARE LEVEL.
3. WINGWALL PILES NOT SHOWN IN ELEVATION VIEW.
4. MAINTAIN 2" MINIMUM CLEARANCE ON ALL REINFORCEMENT UNLESS OTHERWISE NOTED.
5. 414 & 415 BARS NOT SHOWN IN PLAN VIEW.
6. SEE GA. STD. 9037 FOR DRAINAGE DETAILS AT END BENTS.

BRIDGE NO. 2 LT.

GEORGIA
DEPARTMENT OF TRANSPORTATION
ENGINEERING DIVISION-OFFICE OF BRIDGES AND STRUCTURES

END BENT 1 LEFT
SR 1085 (FALL LINE FREEWAY)
OVER LITTLE BLACK CREEK
BALDWIN-WILKINSON COS. EDS00-0000-00(346)

DATE | REVISIONS | BY

DRAWING NO. 35-39
BRIDGE SHEET 13 OF 27

NO SCALE — AUGUST 2010

DESIGNED JTM — CHECKED IAB — REVIEWED WMD/WEI
DRAWN KHB — DESIGN GROUP IAB — APPROVED PVL

B0000346 BR 2 LT & RT.DGN