STATE	PROJECT NUMBER	SHEET NO.	TOTAL SHEETS
GA.	EDS-0000-00(346)	631	999

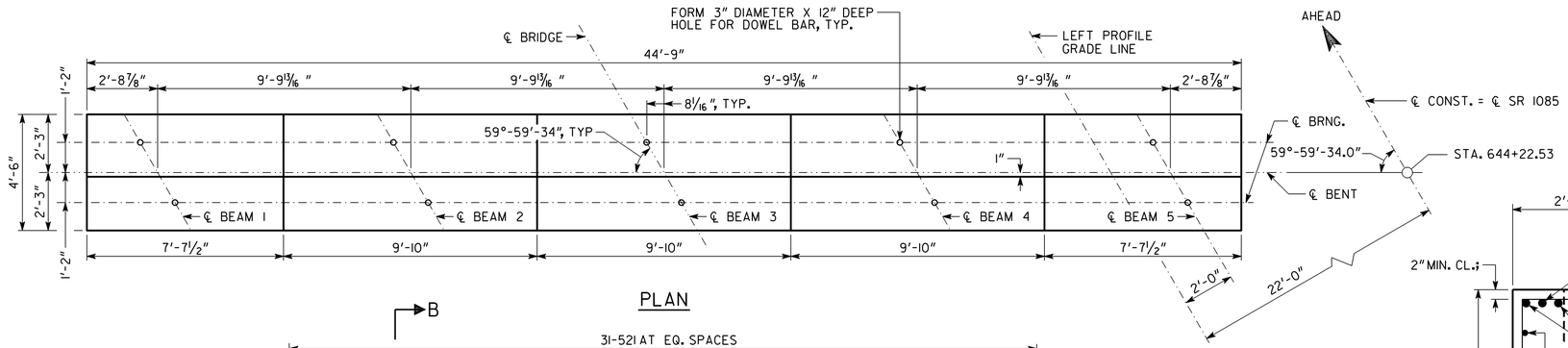

PLAN

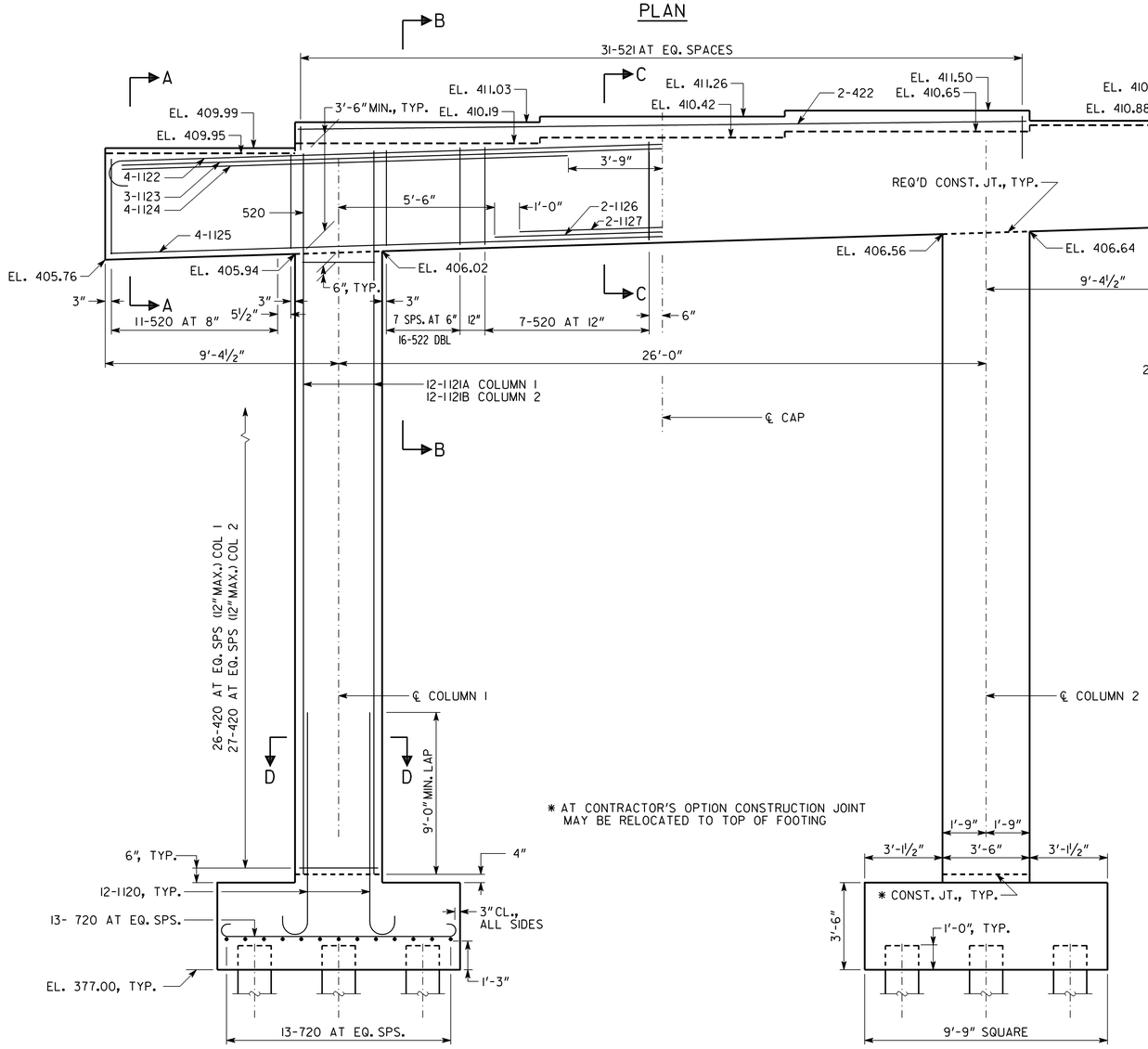

ELEVATION
(LOOKING AHEAD)

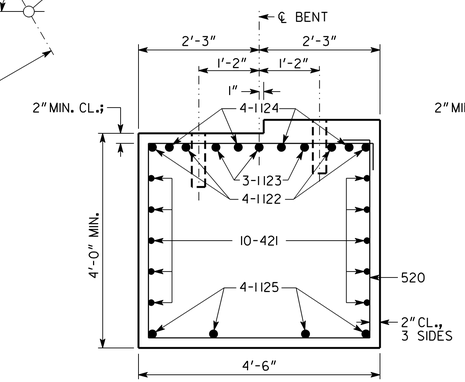

SECTION A-A

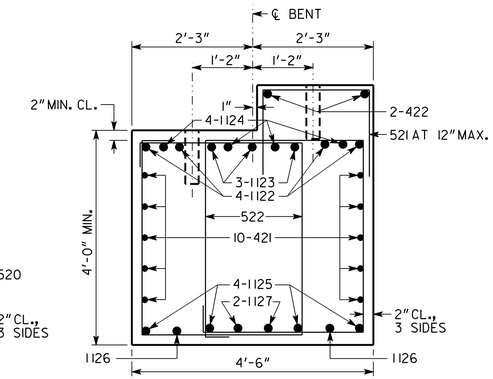

SECTION B-B

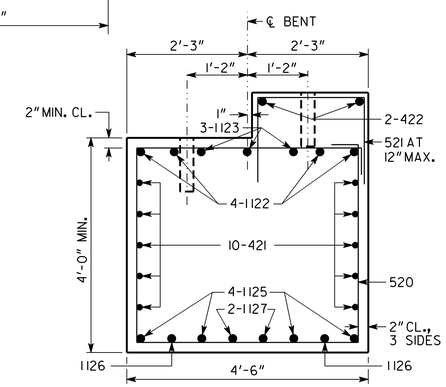

SECTION C-C

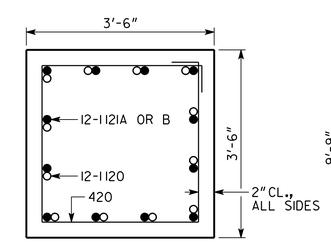

SECTION D-D

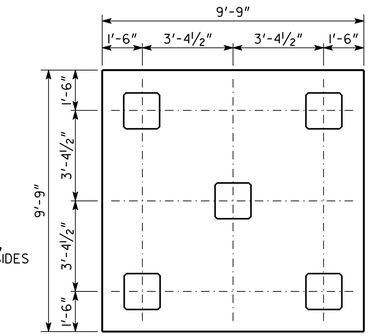

PILE LAYOUT

ALL PILES SHALL BE PSC, 18 IN SQ

PLAN DRIVING OBJECTIVE

ALL PILES SHALL BE DRIVEN TO A DRIVING RESISTANCE OF 85 TONS AFTER A MINIMUM TIP ELEVATION OF 365 IS ACHIEVED.

NOTES:

1. MAINTAIN 2" MINIMUM CLEARANCE ON ALL REINFORCEMENT UNLESS OTHERWISE NOTED.
2. BENT CAP REINFORCEMENT IS SYMMETRICAL ABOUT CENTERLINE OF CAP
3. 421 BARS NOT SHOWN IN ELEVATION VIEW.
4. 520 BARS MAY BE SHIFTED TO MISS THE DOWEL BAR HOLES.

SUBSTRUCTURE QUANTITIES

ITEM	BENT 2 LEFT
CY CLASS "AA" CONCRETE	80.21
LB BAR REINF STEEL	12363

BRIDGE NO. 1 LEFT

GEORGIA
DEPARTMENT OF TRANSPORTATION
ENGINEERING DIVISION-OFFICE OF BRIDGES AND STRUCTURES

INTERMEDIATE BENT 2 LEFT
SR 1085 (FALL LINE FREEWAY)
OVER SR 29 (US 441)

WILKINSON COUNTY EDS00-0000-00(346)

DATE | REVISIONS | BY

DRAWING NO. 35-15
BRIDGE SHEET 15 OF 27

NO SCALE OCTOBER 2010

DESIGNED IAB CHECKED JTM REVIEWED WMD/WEI
DRAWN RGE DESIGN GROUP IAB APPROVED PVL

B0000346 BR 1 LT & RT.DGN