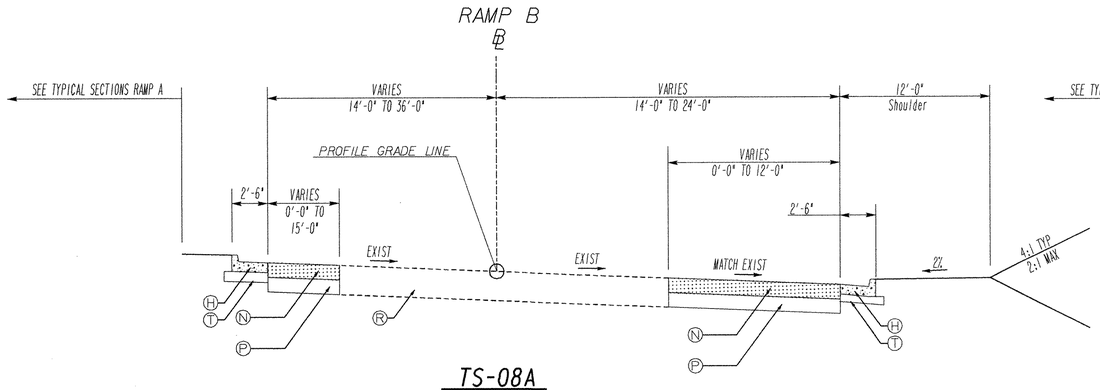

TS-08A

RAMP B NORTHBOUND EXIT
STA 400+00.00 TO STA 401+20
STA 403+80 TO 405+75
N. T. S.

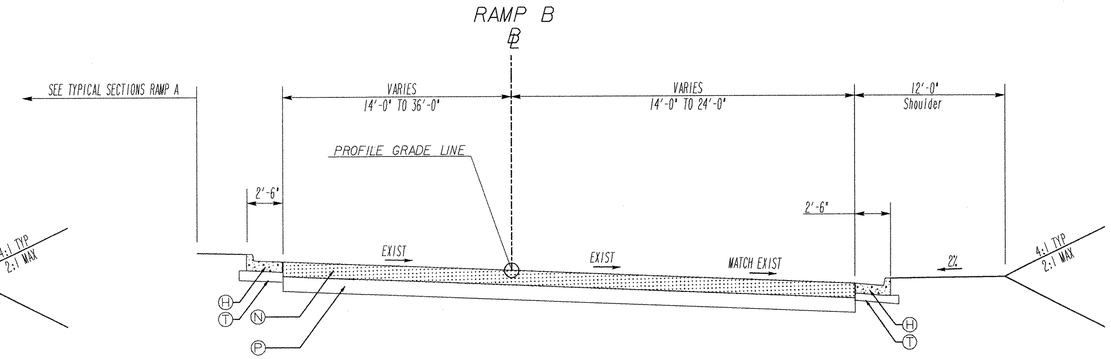

TS-08A

RAMP B NORTHBOUND EXIT
STA 405+75 TO STA 407+53.93
N. T. S.

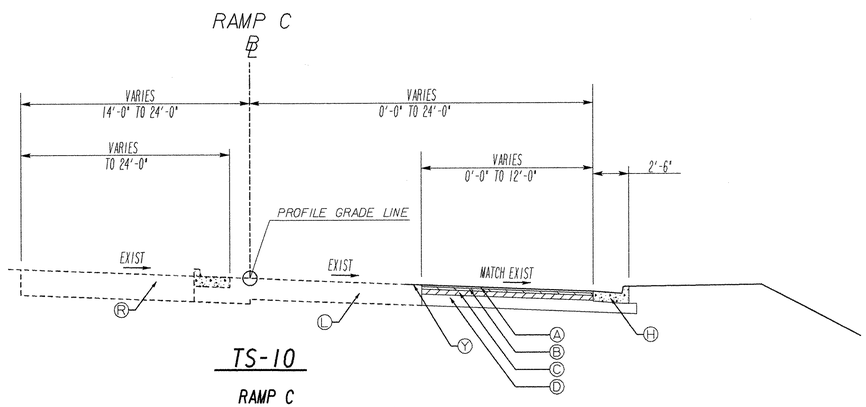

TS-10

RAMP C
STA 601+00 +/- TO STA 606+90
N. T. S.

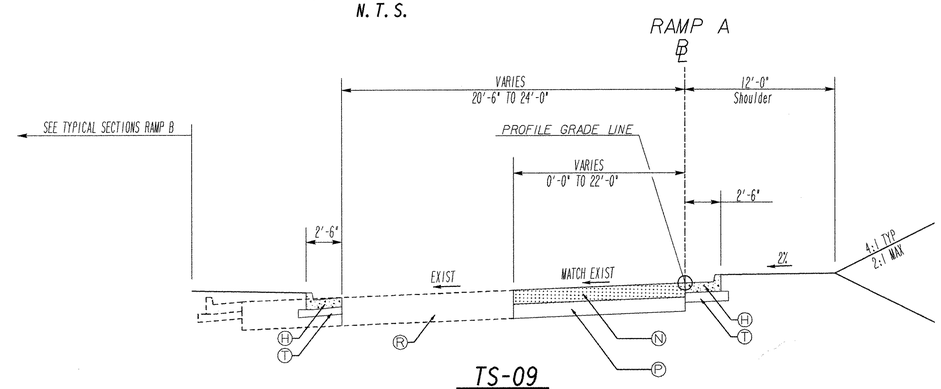

TS-09

RAMP A NORTHBOUND ENTRANCE
STA 500+90 TO STA 505+25
N. T. S.

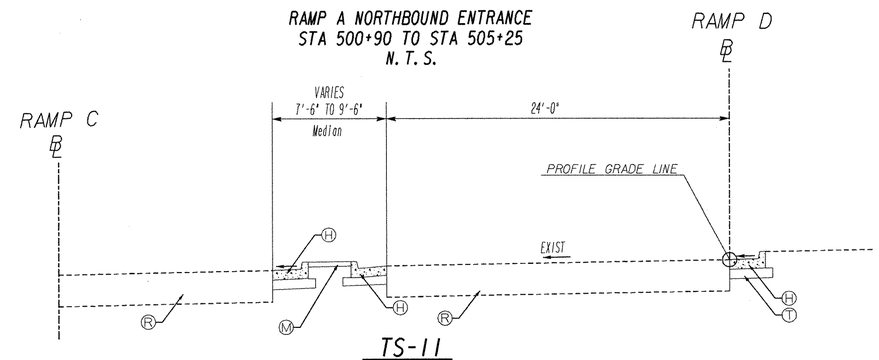

TS-11

RAMP D
STA 700+36 TO STA 701+89.40
N. T. S.

REQUIRED PAVEMENT

- (A) RECYCLED ASPH CONC 12.5 MM SUPERPAVE, GP 2 ONLY, INCL BITUM MATL & H LIME (165 LB/SY)
- (B) RECYCLED ASPH CONC 19 MM SUPERPAVE, GP 1 OR 2, INCL BITUM MATL & H LIME (220 LB/SY)
- (C) RECYCLED ASPH CONC 25 MM SUPERPAVE, GP 1 OR 2, INCL BITUM MATL & H LIME (440 LB/SY)
- (D) GRADED AGGREGATE BASE, 10 IN
- (E) 8" X 24" TP 2 CURB & GUTTER
- (F) CONCRETE MEDIAN, 7½ IN
- (G) 8" X 30" TP 2 CURB & GUTTER
- (H) 6" X 30" TP 1 CURB & GUTTER
- (J) 4" CONC. SIDEWALK
- (K) MILLING, VARIABLE DEPTH
- (L) EXISTING ASPHALT PAVEMENT
- (M) CONCRETE MEDIAN, 4 IN
- (N) PLAIN PC CONC PVMT, CL 3 CONC, 12 INCH THK
- (P) GRADED AGGREGATE BASE, 12 IN
- (Q) RECYCLED ASPH CONC LEVELING, INCL BITUM MATL & H LIME
- (R) EXISTING PLAIN PC CONC PVMT
- (S) TRUCK APRON, 10 IN COLORED, STAMPED CONCRETE
- (T) GRADED AGGREGATE BASE, 6 IN
- (U) CONC. HEADER CURB, TP 9 (GA STD 9032B)
- (W) CONC. HEADER CURB, TP 1 (GA STD 9032B)
- (Y) PVMT REINF FABRIC STRIPS, TP 2, 18 INCH WIDTH
- (Z) PAVEMENT EDGE TREATMENT (DETAIL P-7)

Kimley-Horn and Associates, Inc.

GEORGIA DEPARTMENT OF TRANSPORTATION

REVISION DATES

STATE OF GEORGIA
DEPARTMENT OF TRANSPORTATION
OFFICE: INNOVATIVE PROGRAM DELIVERY

TYPICAL SECTIONS

DRAWING No. 5-004