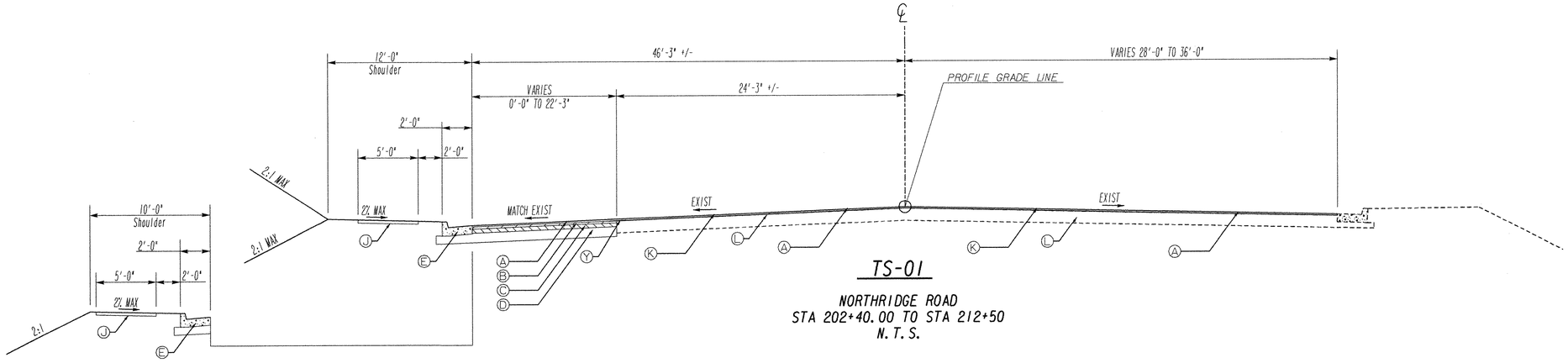

TS-01

NORTHRIDGE ROAD
STA 202+40.00 TO STA 212+50
N.T.S.

STA 204+72.22 TO 210+00

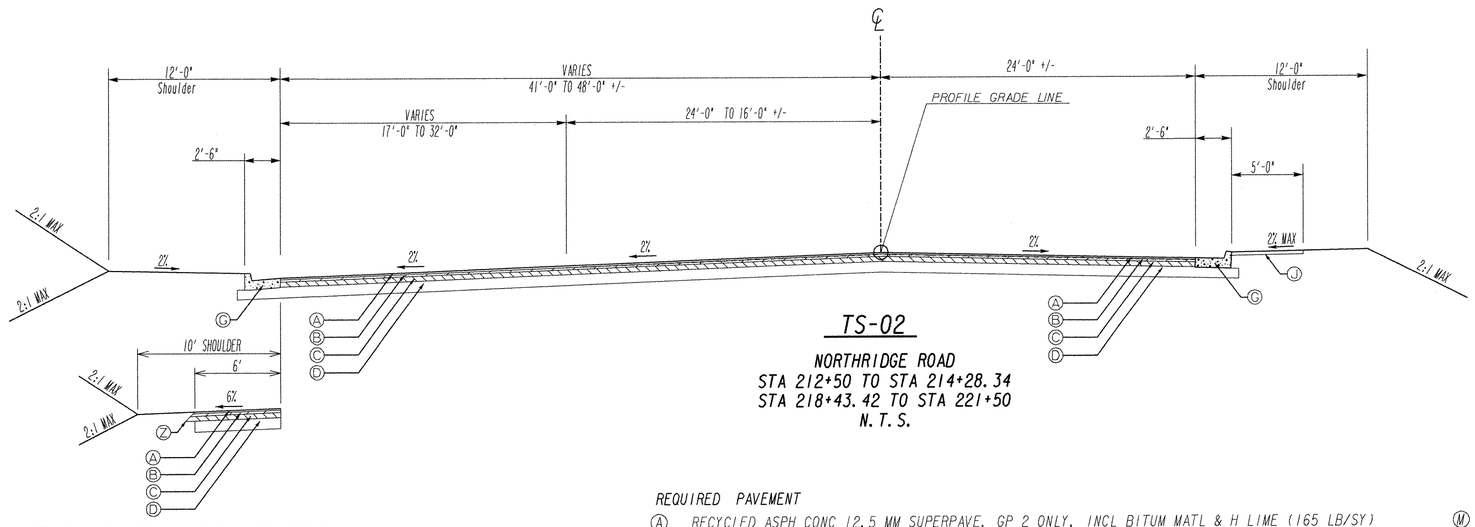

TS-02

NORTHRIDGE ROAD
STA 212+50 TO STA 214+28.34
STA 218+43.42 TO STA 221+50
N.T.S.

STA 214+04.00+/- TO STA 214+28.34
STA 218+43.42 TO STA 219+88.70

REQUIRED PAVEMENT

- (A) RECYCLED ASPH CONC 12.5 MM SUPERPAVE, GP 2 ONLY, INCL BITUM MATL & H LIME (165 LB/SY)
- (B) RECYCLED ASPH CONC 19 MM SUPERPAVE, GP 1 OR 2, INCL BITUM MATL & H LIME (220 LB/SY)
- (C) RECYCLED ASPH CONC 25 MM SUPERPAVE, GP 1 OR 2, INCL BITUM MATL & H LIME (440 LB/SY)
- (D) GRADED AGGREGATE BASE, 10 IN
- (E) 8" X 24" TP 2 CURB & GUTTER
- (F) CONCRETE MEDIAN, 7½ IN
- (G) 8" X 30" TP 2 CURB & GUTTER
- (H) 6" X 30" TP 1 CURB & GUTTER
- (J) 4" CONC. SIDEWALK
- (K) MILLING, VARIABLE DEPTH
- (L) EXISTING ASPHALT PAVEMENT
- (M) CONCRETE MEDIAN, 4 IN
- (N) PLAIN PC CONC PVMT, CL 3 CONC, 12 INCH THK
- (P) GRADED AGGREGATE BASE, 12 IN
- (Q) RECYCLED ASPH CONC LEVELING, INCL BITUM MATL & H LIME
- (R) EXISTING PLAIN PC CONC PVMT
- (S) TRUCK APRON, 10 IN COLORED, STAMPED CONCRETE
- (T) GRADED AGGREGATE BASE, 6 IN
- (U) CONC. HEADER CURB, TP 9 (GA STD 9032B)
- (W) CONC. HEADER CURB, TP 1 (GA STD 9032B)
- (Y) PVMT REINF FABRIC STRIPS, TP 2, 18 INCH WIDTH
- (Z) PAVEMENT EDGE TREATMENT (DETAIL P-7)

Kimley-Horn and Associates, Inc.

GEORGIA DEPARTMENT OF TRANSPORTATION

REVISION DATES

STATE OF GEORGIA
DEPARTMENT OF TRANSPORTATION

OFFICE: INNOVATIVE PROGRAM DELIVERY

TYPICAL SECTIONS

DRAWING No. 5-001