Georgia Department of Transportation
Design-Build Contract

I-285 Ramps at CR 209/ Riverside Drive Project

PI No. 0010925

Fulton County

Dated Advertised: December 19, 2014

REQUEST FOR PROPOSALS

TO DESIGN, AND CONSTRUCT

THE
PROJECT

THROUGH A

DESIGN BUILD AGREEMENT

I-285 Ramps at CR 209/ Riverside Drive

P.I. No. 0010925
INSTRUCTIONS TO PROPOSERS

GEORGIA DEPARTMENT OF TRANSPORTATION

RFP Issued: December 19, 2014

Proposals Due: February 20, 2015 at 11:00 a.m. EST

Georgia Department of Transportation
One Georgia Center
600 West Peachtree Street, NW
Atlanta, Georgia 30308

TABLE OF CONTENTS

SECTION 1.0 INTRODUCTION AND GENERAL PROVISIONS 1

1.1 Introduction 1
1.2 RFP Documents 1
1.3 General Project Description 2
1.4 Procurement Schedule 2
1.5 General Provisions Regarding Proposals 3

1.5.1 Proposal Contents 3
1.5.2 Inclusion of Proposal in DB Documents 3
1.5.3 Commitments in the Proposal 4
1.5.4 Property of GDOT 4

1.6 Improper Conduct 4

1.6.1 Prohibited Activities 4
1.6.2 Non-Collusion 4
1.6.3 Organizational Conflicts of Interest 4
1.6.4 Restrictions on Participation 5
1.6.5 No Participation on More Than One Proposer Team 5
1.6.6 Reserved 5

1.7 Equal Employment Opportunity 5
1.8 DBE Participation 6
1.9 Federal Funding and Requirements 7
1.10 Status of Federal Environmental and FHWA Approval 7

1.10.1 Project 7

1.11 Qualification of Construction and Design Firms 7

1.11.1 Required Pre-Qualification for Contractors 7

1.11.2 Required Pre-Qualification for Engineers 8

1.11.3 Pre-Qualification Assistance 8

1.12 Establishment of Single Purpose Entity(ies) 8

SECTION 2.0 PROCUREMENT PROCESS 8

2.1 Method of Procurement 8
2.2 Communications between GDOT and Proposers 9

2.2.1 Designated Point of Contact 9
2.2.2 Rules of Contact 9
2.2.3 Language and United States Dollar Requirements 10

2.3 Questions and Responses Regarding the RFP 11

2.3.1 Form of Requests..... 11
2.3.2 Timing of Requests 11
2.3.3 Responses and Confidential Information 11

2.4 Addenda 11
2.5 Reserved 12
2.6 Examination of the Request for Proposals Package and Project Site 12
2.7 Changes to Proposer's Organization 12

SECTION 3.0 RESERVED 13
SECTION 4.0 PROPOSAL CONTENT AND SUBMITTAL REQUIREMENTS..... 13

4.1 Format 13
4.2 Contents and Organization 13

4.2.1 Administrative Information..... 14
4.2.2 Technical Proposal..... 14

4.3 Submission of Proposals 15
4.4 Disclosure of Proposals 16
4.5 Validity of Proposals 16
4.6 Proposal Guaranty..... 16
4.7 Forfeiture of Proposal Guaranty..... 16
4.8 Cost of Preparing Proposal..... 17
4.9 Compliant Proposal 17
4.10 Insurance Requirements..... 17

SECTION 5.0 EVALUATION PROCESS AND CRITERIA..... 17

5.1 Pass/Fail and Responsiveness Evaluation 18

5.1.1 Responsiveness..... 18
5.1.2 Administrative Pass/Fail Requirements..... 18
5.1.3 Technical Proposal Pass/Fail Requirements..... 18

5.2 Price Evaluation..... 18
5.3 Requests for Clarification..... 18
5.4 Request for Proposal Revisions..... 19
5.5 Proposal Re-evaluation following Revisions 19
5.6 Payment and Performance Bonding Requirements..... 19

SECTION 6.0 AGREEMENT AWARD AND EXECUTION..... 19

6.1 No Obligation to Award..... 19
6.2 Award and Execution..... 19

6.2.1 Delivery of Drafts, Execution of DB Documents, Etc. 20
6.2.2 Initial Successful Proposer's Failure to Comply 21

6.3 Reserved 21
6.4 Debriefing of Unsuccessful Proposers 21
6.5 Reserved 22

SECTION 7.0 NON-RESPONSESIVE TECHNICAL PROPOSAL PROCEDURES 22

7.1 GDOT's Responsibilities 22
7.2 Proposer's Responsibilities 22
7.3 Technical Proposal Resolution 22
7.4 Time Frames 22
7.5 Costs and Damages 22

SECTION 8.0 GDOT'S RIGHTS AND DISCLAIMERS 22

8.1 GDOT's Rights 22
8.2 Disclaimers 24

Exhibits:

Exhibit A Reserved

Exhibit B Administrative Information Submittal Requirements

Exhibit C Technical Proposal Submittal Requirements

Exhibit D Price Proposal Submittal Requirements

Exhibit E Reserved

Exhibit F Reserved

Exhibit G List of GDOT Project Team

Exhibit H List of Reference Information Documents

Forms:

Form A Proposal Letter

Form B Reserved

Form C Reserved

Form D Reserved

Form E Reserved

Form F Reserved

Form G Form of Participating Members, Major Non-Participating Members and Key Personnel Commitment

Form H Reserved

Form I Reserved

Form J Buy America Certification

Form K Use of Contract Funds for Lobbying Certification

Form L Debarment and Suspension Certification

Form M Reserved

Form N Reserved

Form O Reserved

Form P Reserved

Form Q Reserved

Form R Reserved

Form S Opinion of Counsel

SECTION 1.0 INTRODUCTION AND GENERAL PROVISIONS

1.1 Introduction

The Georgia Department of Transportation ("GDOT"), an agency of the State of Georgia ("State"), issued a Request for Qualifications ("RFQ") for the I-285 Ramps at CR 209/ Riverside Drive Project (as described in more detail in Section 1.3, the "Project") on October 24, 2014. Next GDOT issued a Request for Proposals, dated December 19, 2014 ("RFP") and subsequently amended, as the second step in the procurement process for the Project, pursuant to Section 32-2-81 of the Official Code of Georgia Annotated ("Code"), Chapter 672-18 of the Rules of the Georgia Department of Transportation ("Rules"), and other applicable laws and guidelines.

The RFP solicits competitive detailed Proposals (as described in more detail in Section 1.5.1) to develop the Project by means of a Design-Build Agreement (the "DB Agreement") between the successful Proposer and GDOT. Under such DB Agreement, the Design-Build Team will be required to design and construct the Project during the contract period.

Following the release of initial RFP, Proposers may submit questions regarding the RFP, in accordance with the procedures set forth in the RFP. In response to feedback and input received from the Proposers and other stakeholders, GDOT may opt to issue Addendums to the RFP. In the event that GDOT issues any Addendums to the RFP, the Addendums may supplement or replace the RFP in whole.

Proposals will only be considered from those entities that are selected as the qualified Proposers based on their Statements of Qualifications ("SOQs") submitted in response to the RFQ. This set of Instructions to Proposers ("ITP") provides instructions to be followed by Proposers in their responses to the RFP. Proposals must comply with the ITP requirements.

Refer to Exhibit 1 of the Design-Build Agreement hereto for the meaning of various capitalized terms and acronyms used but not defined herein. Unless otherwise specified, references to Sections, Exhibits and Forms shall mean Sections of the ITP and Exhibits and Forms attached to the ITP.

1.2 RFP Documents

The RFP consists of the below items and any other documents that may be issued by Addendum, as such documents may be amended and supplemented:

- Instructions to Proposers (ITP) (including the attached Exhibits and Forms);
- DB Documents (including the DB Agreement); and
- Reference Information Documents (RID).

Refer to Section 1.2 of the DB Agreement for a list of the DB Documents and their order of precedence. The Reference Information Documents are listed on Exhibit H hereto.

The ITP and the Reference Information Documents are not contract documents and will not form a part of the DB Documents. GDOT does not make any representation or guarantee as to the accuracy, completeness, or fitness of the Reference Information Documents. GDOT does not take any responsibility for the Reference Information Documents and Proposers are responsible for any conclusions they may draw from the Reference Information Documents. GDOT is making the Reference Information Documents available to Proposers for the sole purpose of providing information in the possession of GDOT, regardless of whether such information is accurate, complete, pertinent, or of any value.

1.3 General Project Description

The Project is being procured to enhance safety at the intersections of Riverside Drive and I-285 Ramps in Fulton County, GA. The project is intended to be an interim improvement until long term improvements under revive285 top end are funded.

The proposed Design-Build project is located on Riverside Drive at the interchange with I-285 in Fulton County Georgia and is within the city limits of Sandy Springs. The proposed Design-Build project will convert the signalized intersections at the ramp termini to single lane roundabouts, one at each intersection. Each approach to the roundabout will be widened to two lanes with one lane entering the roundabout and the other serving as a right turn lane. Sidewalks will be added to both sides of the roadway along Riverside Driveway within the limits of the project. The project is approximately 0.5 mile length.

Additionally the project will also include routine rehabilitation of the existing bridge. This work includes replacement of the joints at bent 2 and abutments 1 and 5. All construction joints will be resealed and the bridge deck will be sealed with a two-part polymer overlay. Concrete spalling will be repaired on bents 3 & 4 and abutment 5. Bridge work will also include any required approach work due to the construction of the projects 2 roundabouts.

The Design-Build Team will be responsible for the design and construction of the Project during the contract. As part of such construction work, Design-Build Team will be responsible for undertaking and completing certain utility adjustments pursuant to Section 7.5 of the DB Agreement and the Technical Provisions.

1.4 Procurement Schedule

The procurement schedule is as follows:

	Activity	Date	Time
1.	Issue RFP	12/19/2014	----------
2.	Deadline for Proposers to submit questions regarding RFP	~~2~~3/18/~~2014~~2015	11:00 A.M.
3.	Deadline for submission of changes to Proposer's organization	~~2~~3/20/~~2014~~2015	11:00 A.M.
4.	**GDOT letting (receipt of bid/technical proposal from Finalists)**	**~~2~~3/20/2015**	**11:00 A.M.**

All dates set forth above and in the RFP are subject to change in GDOT's sole discretion. To the extent such dates are changed, GDOT shall formally notify Proposers through the project advertisement through the Electronic Bid Submission website ("electronic bidding website") provided in Exhibit D. All times in this ITP are Eastern Standard Time (EST) or Eastern Daylight Time (EDT), as applicable.

1.5 General Provisions Regarding Proposals

1.5.1 Proposal Contents

As used in this procurement, the term "Proposal" means a Proposer's complete response to the RFP, including Proposer's:

(a) Administrative Information Submittals;

(b) Technical Proposal for the Project; and

(c) Price Proposal for the Project.

Detailed instructions regarding the Administrative Information Submittals, the Technical Proposal and the Price Proposal are provided in Exhibits B through D. Forms required for inclusion in the Proposals are attached to this ITP. Each Proposal component shall be clearly titled and identified and shall be submitted without reservations, qualifications, conditions or assumptions. Any failure to provide all the information and all completed Forms in the format specified by the ITP may result in GDOT's rejection of the Proposal. All blank spaces in the Proposal forms must be filled in as noted. No substantive change(s) shall be made to the Proposal Forms. The successful Proposer will be required to deliver an original copy of Form L prior to the execution of the DB Agreement.

1.5.2 Inclusion of Proposal in DB Documents

Portions of the successful Proposer's Proposal will become part of the DB Documents, as applicable and to the extent specified in the RFP. All other information is for evaluation purposes only and will not become part of the DB Documents.

1.5.3 Commitments in the Proposal

GDOT will give no consideration to tentative or qualified commitments in the Proposals. For example, GDOT will give no consideration to phrases such as “we may” or “we are considering” in the evaluation process because they do not indicate a firm commitment.

1.5.4 Property of GDOT

All documents include in the Proposals submitted by Proposers in response to the RFP shall become the property of GDOT and will not be returned to Proposer.

1.6 Improper Conduct

1.6.1 Prohibited Activities

If Proposer, or anyone representing Proposer, offers or gives any advantage, gratuity, discount, bribe, or loan of any sort to GDOT, the State Transportation Board, or officers, administrators, staff or consultants of GDOT, including agents or anyone representing the foregoing at any time during the Project procurement process: (1) GDOT shall immediately disqualify Proposer; (2) Proposer shall forfeit its Proposal Guaranty, if applicable; (3) Proposer shall not be entitled to the Payment for Work Product; and (4) GDOT may sue Proposer for damages.

1.6.2 Non-Collusion

Proposer shall not undertake any of the prohibited activities identified in the Non-Collusion ~~Affidavit (Form B)~~Certification.

1.6.3 Organizational Conflicts of Interest

Proposers are advised that the Conflicts of Interest Policy and the organizational conflict of interest rules found in 23 C.F.R. § 636, Subpart A, including 23 C.F.R. § 636.116, apply to this procurement.

Each Proposer must include in its Proposal a full disclosure of all potential organizational conflicts of interest within its team ~~(Form C)~~.

Proposer is prohibited from receiving any advice or discussing any aspect of the Project or the procurement of the Project with any person or entity with an organizational conflict of interest, including, but not limited to the entities and individuals listed in Exhibit G (List of GDOT Project Team); and any parent, affiliate, or subsidiary of any of the foregoing entities, or an entity that is under common ownership, control or management with any of the foregoing entities.

By submitting its Proposal, each Proposer agrees that, if an organizational conflict of interest is thereafter discovered, Proposer must make an immediate and full written disclosure to GDOT that includes a description of the action that Proposer has taken or

proposes to take to avoid or mitigate such conflicts. If Proposer was aware of an organizational conflict of interest prior to award of the DB Documents and did not disclose the conflict to GDOT, GDOT may terminate the DB Documents for default.

1.6.4 Restrictions on Participation

Proposers are advised that the following entities and individuals are precluded from submitting a Proposal and from participating on a Proposer team as an Participating Member, Major Non-Participating Member, Contractor, subcontractor or subconsultant:

(a) any entity or individual listed in Exhibit G (List of GDOT Project Team). GDOT has contracted with these entities or individuals, as the case may be, to aid in the development of the RFQ, RFP, estimates or scope of services for the Project, or to participate in the Statement of Qualifications (SOQ) or Proposal evaluation process;

(b) any entity that is a parent, affiliate, or subsidiary of any of the entities listed in Exhibit G, or that is under common ownership, control or management with any of the foregoing entities; and

(c) any Contractor who is currently suspended, debarred or voluntarily excluded under 49 Code of Federal Regulations (CFR) Part 29 or is otherwise determined to be ineligible to participate in the federal-aid highway program.

1.6.5 No Participation on More Than One Proposer Team

To ensure a fair procurement process, Participating Members and Major Non-Participating Members of Proposer teams are forbidden from participating, in any capacity, on another Proposer team during the course of the Project procurement (i.e. until execution of the DB Agreement by GDOT). The foregoing prohibition extends to affiliated entities of Participating Members and Major Non-Participating Members. GDOT reserves the right to disqualify any Proposer that fails to comply with this prohibition. If a Proposer has any question as to whether or not its proposed team would be in compliance with the terms of this Section 1.6.5, such Proposer may submit the issue to GDOT in writing, describing in reasonable detail the proposed structure and seeking clarification.

1.6.6 Reserved

1.7 Equal Employment Opportunity

Proposers shall not, in connection with the RFP and the DB Documents, discriminate against any employee or applicant for employment because of race, color, religion, sex, national origin, age, marital status, or disability. Proposers shall take affirmative action to ensure that applicants for employment and employees are not discriminated against because of their race, color, religion, sex, national origin, age, marital status, or

disability. The areas requiring such affirmative action shall include, but not be limited to, the following: layoff or termination; rates of pay or other forms of compensation; employment; job assignment; promotion; demotion; transfer; recruitment/recruitment advertising; and selection for training, including apprenticeship, pre-apprenticeship and/or on-the-job training. Please see Attachment 5 to Exhibit 8 to the DB Agreement for the federal equal employment opportunity provisions that apply to the Project.

1.8 DBE Participation

The purpose of this section is to establish criteria for acceptability of Disadvantaged Business Enterprise (DBE) firms for Work performed on this contract. The intent is to ensure all participation counted toward fulfillment of the DBE goals is (1) real and substantial, (2) actually performed by viable, independent DBE owned firms, and (3) in accordance with the spirit of the applicable laws and regulations.

The policy of the GDOT is to ensure compliance with Title VI of the Civil Rights Act of 1964, 49 Code of Federal Register, Part 26 and related statutes and regulations in all program activities.

To this end the GDOT shall not discriminate on the basis of race, color, sex or national origin in the award, administration and performance of any GDOT assisted contract or in the administration of its Disadvantaged Business Enterprise Program. The Georgia Department of Transportation shall take all necessary and reasonable steps to ensure nondiscrimination.

DBE payments and commitments for Federal-aid projects shall be separate and distinct and cannot be transferred or combined in any matter.

The DBE Goal specified in the contract will be a percentage representing the DBE Race Conscious Participation. The DB Team will strive to achieve an additional percentage in his/her contracts for all projects during the course of the current State Fiscal Year, in order to meet the overall Georgia Department of Transportation DBE goal. ~~The DBE Goal for this project is identified in Form I~~.

GDOT's overall statewide DBE goal is fifteen percent (15%) of the overall Project design and construction costs, with respect to the race conscious participation by the Design-Build Team. ~~Specific DBE Proposal obligations are set forth in Section B.2.2.8 of Exhibit B.~~ For further information regarding GDOT's DBE program and the Design-Build Team's DBE obligations, Proposers may contact GDOT's Equal Opportunity Office, at (404) 631-1972. GDOT, will be undertaking public outreach efforts during the procurement process to facilitate the identification of DBE firms and employment opportunities for minorities and women.

1.9 Federal Funding and Requirements

Proposers are advised that the Project will require the use of federal funds. Accordingly, applicable federal law and FHWA regulations will govern the Project's procurement and contract documents.

1.10 Status of Federal Environmental and FHWA Approval

1.10.1 Project

The environmental documents under NEPA/GEPA are being pursued for the Project by GDOT in coordination with the concept design efforts.

NEPA document is currently under review and is anticipated to be approved in February ~~2014~~2015. Environmental commitments have been provided in Section 4.3.2 of Volume 2.

Further information regarding this process is available at: http://frwebgate.access.gpo.gov/cgi-bin/getdoc.cgi?dbname=2009_register&docid=fr27au09-110 and http://www.fhwa.dot.gov/design/interstate/pubs/access/access.pdf.

1.11 Qualification of Construction and Design Firms

Proposers shall ensure that the entities identified in Sections 1.11.1 and 1.11.2 have satisfied the pre-qualification requirements set forth in this Section 1.11.

In addition, before commencing performance of any Work, all firms must register to do business in the State. This can be accomplished by contacting the Georgia Secretary of State Corporations Division Office at (404) 656-2817 or visiting their website at:

http://www.sos.ga.gov/corporations/.

1.11.1 Required Pre-Qualification for Contractors

The Lead Contractor shall be pre-qualified with GDOT prior to the Proposal Due Date. If the roadway work is not performed by the pre-qualified Lead Contractor, the entity performing the roadway work shall also be pre-qualified prior to initiating any Work.

The pre-qualification process involves, but is not limited to submitting (a) a completed contractor qualification form and (b) financial statements to GDOT. For further information regarding the pre-qualification process, please see:

http://www.dot.ga.gov/doingbusiness/contractors/Pages/default.aspx

1.11.2 Required Pre-Qualification for Engineers

Proposer shall ensure the use of entities prequalified in related disciplines (design, traffic analysis, geotechnical, NEPA, construction, etc.) as presented in the SOQ. Any proposed changes to the team must be approved by GDOT. All Work must be performed by entities which are prequalified by GDOT.

If Proposer's design for the Project includes design work outside the scope of the area classes set forth in the RFQ, at least one team member shall be prequalified with GDOT in the appropriate area class.

The prequalification requirement does not apply to any area class that is not implicated by a Proposer's design for the Project. The pre-qualification process involves submitting (a) a pre-qualification form and (b) grid sheet to GDOT. For further information regarding the pre-qualification of engineers, please see: **http://www.dot.ga.gov/doingbusiness/prequalification/consultants/Pages/default.aspx**

1.11.3 Pre-Qualification Assistance

For assistance with the contractor pre-qualification process, call (404) 631-1213. Proposers can obtain assistance with the engineering pre-qualification process by contacting the Transportation Services Procurement office at (404) 631-1426 or **consultants_prequals@dot.ga.gov**.

1.12 Establishment of Single Purpose Entity(ies)

If the Apparent Successful Proposer contemplates the creation of one or more single purpose entities as the parties to execute the DB Documents, Proposer is required to establish each such single purpose entity and submit executed copies of the articles of incorporation and any other corporate formation documents for the single purpose entity to GDOT within sixty (60) days of GDOT's announcement of the Apparent Successful Proposer. Proposers anticipating the creation of any such single purpose entity must include pro forma corporate formation documents in the Proposal, as described in Exhibit B. Failure to meet the requirements in this Section 1.12 will result in forfeiture of the Proposer Proposal Guaranty. Establishment of the single purpose entity(ies) (if any) is a prerequisite to execution of the DB Documents.

SECTION 2.0 PROCUREMENT PROCESS

2.1 Method of Procurement

GDOT is issuing the RFP in accordance with the provisions of Sections 32-2-81 of the Code, Chapter 672-18 of the Rules and other applicable laws and guidelines. GDOT will award the DB Documents (if at all) to the Proposer that submits the Lowest Qualified Price Proposal. Subject to Section 8.1, GDOT will base the evaluation of Proposals on information submitted in the Proposals, and will involve both pass/fail

evaluation factors and price criteria, as further detailed in Section 5 below and in the Exhibits to this ITP.

2.2 Communications between GDOT and Proposers

The RFP will be issued to Proposers in electronic format on the electronic bidding website for the Project as defined in Exhibit D.7. Additional project information may be contained on a Sharepoint site for the Project (the "Sharepoint Site"). The Sharepoint Site can be found at the address below and by clicking on the Project's PI. No. Each Proposer will be required to check the electronic bidding website and Sharepoint site regularly for Addenda to the RFP and for other procurement related information.

http://mydocs.dot.ga.gov/info/designbuild/default.aspx

2.2.1 Designated Point of Contact

The following individual has been designated as the Contracting Officer for the Project (the "Authorized Representative"):

Monica Flournoy, Construction Bidding Administrator
Georgia Department of Transportation
One Georgia Center
600 West Peachtree Street, NW
Atlanta, Georgia 30308
Phone: (404) 631-1147
E-mail: mflournoy@dot.ga.gov

From time to time during the procurement process or during the term of the DB Documents, GDOT may designate another Authorized Representative to carry out some or all of the obligations pertaining to the Project.

2.2.2 Rules of Contact

Unless specifically authorized elsewhere in this ITP, the Authorized Representative, as may be changed in writing by GDOT, is the single contact and source of information for this procurement.

The rules of contact set forth in this Section 2.2.2 shall apply during the Project procurement process, commencing with the issuance of this ITP. These rules are designed to promote a fair, unbiased, and legally defensible procurement process. Contact includes face-to-face, telephone, electronic-mail (e-mail), text or any other form of formal written communication.

The specific rules of contact are as follows:

(a) Neither a Proposer nor any of its team members may communicate with another Proposer or members of another Proposer's team with regard to the RFP or either team's Proposal. This prohibition does not apply to (1)

Proposer communication with a Contractor that is on both its team and another Proposer's team, provided that the Contractor shall not act as a conduit of information between the two Proposers; and (2) public discussion regarding the RFP at GDOT-sponsored informational meetings.

(b) Unless otherwise specifically noted in this ITP or authorized by the Authorized Representative, all Proposer communication with GDOT will be between Proposer's identified representatives and the Authorized Representative. All such communication must be in writing (by e-mail).

(c) Under normal circumstances, the Authorized Representative will contact a Proposer in writing through Proposer's designated representative.

(d) Continuing until the earliest of (1) execution and delivery of the DB Documents, (2) GDOT's rejection of all Proposals or (3) cancellation of the Project procurement, neither a Proposer nor its agents may have ex parte communications with GDOT employees, members of the Technical Review Committee, the Bid Review Committee, the State Transportation Board, any other person who will evaluate Proposals and any person identified in Section 1.6.4, regarding the Project, except for communications expressly permitted in this ITP or through the process identified above. The foregoing restriction shall not, however, preclude or restrict communications regarding matters unrelated to the Project or from participating in public meetings or any public or Proposer workshop related to the Project. GDOT may, in its sole discretion, disqualify any Proposer engaging in such prohibited communications.

(e) Any contact by a Proposer determined by GDOT to be improper may result in disqualification of Proposer.

(f) Written communications regarding the Project will be disseminated from GDOT on GDOT letterhead. The Authorized Representative will sign such communications. Alternatively, the Authorized Representative may communicate via email originating from GDOT's server.

(g) GDOT will not be responsible for or bound by (1) any oral communication or (2) any other information or contact that occurs outside the official communication process specified herein, unless confirmed in writing by the Authorized Representative.

2.2.3 Language and United States Dollar Requirements

All correspondence regarding the RFP, the Proposal, the DB Documents and all other matters pertaining to this procurement is to be in the English language. If any original documents required for the Proposal are in any other language, Proposer shall provide a certified English translation, which shall take precedence in the event of conflict with

the original language. Proposer shall exclusively use United States dollars in its Proposal, except in pre-printed or reference materials. Unless otherwise specified, all references to monetary values shall be in United States dollars. In the evaluation of Proposals, GDOT may choose to disregard any financial figures provided by Proposer in denominations other than United States dollars.

2.3 Questions and Responses Regarding the RFP

Proposers shall be responsible for reviewing the RFP and any Addenda issued by GDOT prior to the Proposal Due Date, and for requesting written clarification or interpretation of any perceived discrepancy, deficiency, ambiguity, error or omission contained therein, or of any provision which Proposer fails to understand. Proposers shall submit, and GDOT will respond to, such requests in accordance with this Section 2.3. Any responses to these requests will not be considered part of the DB Documents.

2.3.1 Form of Requests

Proposers shall deliver any requests to the Authorized Representative via e-mail. GDOT will only consider requests made by Proposers' designated representatives and will not consider telephone or other oral requests. Proposers are responsible for ensuring that requests clearly indicate on the first page or in the subject line, as applicable, that the material relates to the Project. Requests must include the requestor's name, address, telephone and email address, and Proposer he/she represents. Proposers will be limited to 50 comments/questions with respect to the RFP. If a question has more than one subpart, each subpart will be considered a separate question. Corrections of typographical errors, incorrect cross references or inconsistencies within or among the RFP documents will be excluded from the above numerical limitations.

2.3.2 Timing of Requests

Proposers must submit any requests under this Section 2.3 prior to the deadline for such requests in Section 1.4. GDOT is not required to answer any questions submitted by Proposers after this deadline.

2.3.3 Responses and Confidential Information

GDOT's responses to questions submitted under this Section 2.3 will be in writing and GDOT will post these responses on the Sharepoint Site to all Proposers. GDOT may rephrase or consolidate questions as it deems appropriate.

2.4 Addenda

GDOT reserves the right, in its sole discretion, to revise, modify or change the RFP and/or procurement process at any time before the Proposal Due Date. Any such revisions will be implemented through issuance of Addenda to the RFP. Addenda will

be posted on the electronic bidding website. If any Addendum significantly impacts the RFP, as determined in GDOT's sole discretion, GDOT may change the RFP schedule, including the Proposal Due Date. The announcement of such new schedule will be included in the Addendum. In addition, the Addendum will indicate the latest date for submittal of any clarification requests concerning the Addendum.

GDOT will not be bound by, and Proposer shall not rely on, any oral communication or representation regarding the RFP documents, or any written communication except to the extent that it is contained in the RFP or in an Addendum to the RFP and is not superseded by a later Addendum to the RFP.

2.5 Reserved

2.6 Examination of the Request for Proposals Package and Project Site

GDOT shall permit Proposers to access the Project site to perform limited investigations. Proposers must notify the GDOT Area Office prior to entering the Project site and must follow all applicable state laws including erosion control and traffic control. Proposers are expected to carefully examine the Project site and the complete RFP package before submitting a Proposal.

Each Proposer shall, by submission of a Proposal, be deemed to have made such examination and to have satisfied itself as to the conditions to be encountered in performing the Work under the DB Documents.

2.7 Changes to Proposer's Organization

Proposers are advised that, in order for a Proposer to remain qualified to submit a Proposal, a Proposer's organization as identified in the SOQ must remain intact for the duration of the procurement process, unless otherwise approved in writing by GDOT. This restriction applies to any changes in the following:

(a) the Participating Members and Major-Non-Participating Members of Proposer;

(b) the lead individual from each Participating Member and Major Non-Participating Member;

(c) the project manager for the Lead Contractor;

(d) the superintendent for the Lead Contractor;

(e) the lead design engineer for the Lead Engineering Firm; and

(f) any other key members of Proposer's management team or other individuals that Proposer identified in its SOQ.

If a Proposer wishes to change the organization represented in its SOQ by adding, removing, or substituting any of the individuals listed above, by changing the role of one of these individuals, by changing or adding an Participating Member or Major Non-Participating Member to Proposer team, or by changing the level of participation of one or more Participating Members of its team, Proposer must submit to the Authorized Representative a written request to change its organization no later than the date specified in Section 1.4. If a request is made to allow an addition to the team, including a new Participating Member or Major Non-Participating Member, Proposer shall submit with its request the information required by the RFQ for the position the proposed individual will fill. If a request is made to allow deletion of one of the individuals listed above, Proposer shall submit such information as GDOT may require to demonstrate that the changed Proposer team is equal to or better than the team shortlisted by GDOT during the RFQ phase of this procurement.

GDOT shall have sole discretion to grant or withhold approval of any requested change and to waive the requirement that Proposer submit such change no later than the date specified in Section 1.4.

SECTION 3.0 RESERVED

SECTION 4.0 PROPOSAL CONTENT AND SUBMITTAL REQUIREMENTS

4.1 Format

To facilitate the evaluation of Administrative and Technical Proposals and to help protect the confidentiality of proprietary information Proposal submittal shall be submitted described below shall be submitted in two (2) separate sealed packages.

Unless otherwise specified in this ITP, all written submittals must be prepared on 8-1/2" x 11" white paper. All written submittals, regardless of paper size, must be prepared on white paper and included in the applicable binder. Each section shall have sequentially numbered pages, shall be separated by a divider with a tab, and shall be prepared using no smaller than twelve-point font size, except for tables, which may be prepared using ten point font size. Some of the required documents have specified page limitations, as set forth in Exhibits B, C and D. GDOT may disregard documents not complying with these page limitations. Pages may be printed on two sides, in which event each side shall be considered one page. Printed lines may be single-spaced. Proposers shall not include standard corporate brochures, awards, licenses and marketing materials and GDOT will not evaluate such materials.

4.2 Contents and Organization

Proposers shall clearly index their Administrative and Technical Proposals using pages with tabs and organize them in the order set forth in this Section 4.2. The Proposal shall contain separately bound and labeled Administrative and Technical Proposals, each in a separate loose-leaf three ring binder, including the information described in this

Section. Proposers may subdivide each Administrative and Technical Proposals as needed. The electronic submittals (CDs and/or DVDs) shall follow equivalent organizational standards, and shall use a searchable format with appropriate bookmarks.

The first page of each Administrative and Technical Proposal shall be a page executed by the Proposer that sets forth the specific items Proposer deems confidential, trade secret or proprietary information protected from public disclosure under the Open Government Laws. Each entry shall list the specific statute within the Open Government Laws that Proposer has reasonably determined is exempt from disclosure under Section 50-18-72 of the Code or any other applicable law. The list required under this Section 4.2 is intended to provide input to GDOT as to the confidential nature of a Proposer's Proposal, but in no event shall such list be binding on GDOT or determinative of any issue relating to confidentiality. Blanket designations that do not identify the specific information shall not be acceptable and may be cause for GDOT to treat the entire Proposal as public information. In no event shall the State, GDOT or any of their respective agents, representatives, consultants, directors, officers or employees be liable to a Proposer or Proposer team member for the disclosure of all or a portion of a Proposal submitted under this RFP.

If GDOT receives a request for public disclosure of all or any portion of the materials identified as confidential and included in any part of a Proposal, GDOT will promptly notify the applicable Proposer of the request. Proposer may seek a protective order or other appropriate remedy at such Proposer's sole cost and expense. If GDOT determines in good faith that the materials identified as “confidential” are not exempt from the Open Government Laws, GDOT will release the requested information. GDOT shall make the final determination regarding whether the requested information is to be disclosed or withheld.

Nothing contained in this provision shall modify or amend requirements and obligations imposed on GDOT by the Open Government Laws or other applicable law, and the provisions of the Open Government Laws or other laws shall control in the event of a conflict between the procedures described above and the applicable law.

Please see Exhibit B, Exhibit C, and Exhibit D for special instructions regarding submission of information relating to the Price Proposal.

4.2.1 Administrative Information

The Administrative Proposal will contain the components described in Exhibit B, separated and labeled appropriately and organized.

4.2.2 Technical Proposal

The Technical Proposal will contain the components described in Exhibit C, separated and labeled appropriately and organized.

The Technical Proposal shall be consistent with the requirements in the DB Documents. In drafting the Technical Proposal, Proposers shall use the versions of any manuals, guidelines or specifications, including but not limited to those identified in Volume 3 of the Technical Provisions, in effect at the date of the RFP advertisement..

4.3 Submission of Proposals

Proposers shall submit the following to GDOT:

(a) One (1) original of each of the Administrative Proposal and the Technical Proposal (each proposal marked "ORIGINAL");

(b) Five (5) copies of the Technical Proposal;

(c) One (1) copy of the Administrative Proposal;

(d) One (1) electronic copy of the Administrative, and Technical Proposals in "PDF" and

(e) Electronic copy of the Preliminary Baseline Schedule as described in Exhibit C of the ITP.

Proposers shall submit and individually label all packages making up its Proposal as follows:

Proposal for the I-285 Ramps at CR 209/ Riverside Drive Project
Re: Administrative Information; Technical Proposal

Proposals shall be delivered no later than 11:00 a.m. EST on the Proposal Due Date (as specified in Section 1.4) to:

Georgia Department of Transportation
One Georgia Center
11th Floor
600 West Peachtree Street, NW
Atlanta, Georgia 30308
Attn: Monica Flournoy

Acknowledgment of receipt of Proposals will be evidenced by the issuance of a receipt by a member of GDOT staff. GDOT will not accept Proposals submitted via facsimile or e-mail.

GDOT will not accept any Proposals delivered after 11:00 a.m. EST on the Proposal Due Date as specified in Section 1.4. Any Proposals received after the specified time on the Proposal Due Date will be rejected and not considered. Proposers are solely responsible for assuring that GDOT receives their Proposals by the specified time on the Proposal Due Date at the address listed above. GDOT shall not be responsible for

delays in delivery caused by weather, difficulties experienced by couriers or delivery services, delays due to security check-in process, misrouting of packages by courier or delivery services, improper, incorrect or incomplete addressing of deliveries and other occurrences beyond the control of GDOT.

4.4 Disclosure of Proposals

No Proposal shall be made public until the procurement phase of the Project, including any evaluation, negotiations and award, has been completed.

4.5 Validity of Proposals

Proposals submitted and not withdrawn as of the Proposal Due Date shall be valid for a period of fifty (50) days commencing on the Proposal Due Date. No Proposer shall withdraw its Proposal within fifty (50) day period, unless notified by GDOT that (i) the DB Documents for the Project will not be awarded by GDOT pursuant to the RFP or (ii) GDOT has awarded the DB Documents to another Proposer, has received the executed DB Documents and other required documents, and does not intend to award the DB Documents to Proposer.

Any Proposer may elect, in its sole discretion, to extend the validity of its Proposal beyond the time periods set forth above.

4.6 Proposal Guaranty

Each Proposer shall submit a Proposal Guaranty and Power of Attorney, as described in Special Provision 102.06.

4.7 Forfeiture of Proposal Guaranty

Each Proposer understands and agrees that if it has submitted and not withdrawn its Proposal as of the Proposal Due Date and (i) withdraws any part or all of its Proposal (without the Consent of GDOT) while the Proposal is valid or (ii) if it is selected at the apparent Successful Proposer pursuant to Section 6.2 or Section 6.2.2, should otherwise refuse or be unable to furnish any commitments made in its Proposal, GDOT shall be entitled to draw on the Proposal Guaranty in its entirety and Proposer shall not be entitled to the Payment for Work Product.

Proposer acknowledges that the forfeiture of the Proposal Guaranty constitutes liquidated damages and is not a penalty, and the amount forfeited is fair and reasonable and such payment represents a reasonable estimate of fair compensation to GDOT for the work required to procure the Project and the reputational losses which may accrue.

Subject to Section 6.3.1, GDOT will retain the Proposal Guaranty for all Proposers until the DB Documents have been fully executed, GDOT has canceled the RFP or the conclusion of the validity period described in Section 4.5; after which GDOT will return the Proposal Guaranty for each Unsuccessful Proposer, except any Proposal Guaranty

drawn upon by GDOT. Further, GDOT shall return the Proposal Guaranty to the successful Proposer within two (2) Business Days of GDOT's receipt of the Payment and Performance Bonds, in accordance with Section 5.6.

Proposer understands that any material alteration, as determined by GDOT in its sole discretion, of documents specified in this Section 4, the Form of Proposal Guaranty ~~(Form D-1)~~, will render the Proposal non-responsive and non-compliant, unless such alteration was authorized by GDOT in writing prior to the Proposal Due Date.

4.8 Cost of Preparing Proposal

The cost of preparing the Proposal and any costs incurred at any time before or during the Proposal process shall be borne by Proposer.

4.9 Compliant Proposal

Proposer shall submit a Proposal that provides all the information required by the ITP. If the Proposal does not fully comply with these requirements, GDOT may deem the Proposal non-responsive in which case Proposer shall be disqualified. In addition, GDOT may consider Proposals non-responsive and Proposer disqualified for the following reasons:

(a) If the Proposal is not submitted in the format specified in this ITP, is illegible or is incomplete;

(b) If the Proposal contains multiple, conditional or alternate Proposals or contains any omission, erasures, alterations, unauthorized additions or other irregularities of any kind; or

(c) If Proposer is in arrears in the payment of any obligation due and owing the State, including the payment of taxes and employee benefits.

4.10 Insurance Requirements

Proposers are cautioned to carefully review the minimum insurance requirements set forth in the DB Documents and to take these minimum requirements into account in putting together their Technical Proposal and Price Proposal.

SECTION 5.0 EVALUATION PROCESS AND CRITERIA

Upon GDOT's receipt of the Proposals, GDOT will proceed to review the Proposals using the pass/fail factors set forth in Section 5.1. As set forth in Section 5.4, the evaluation process may, at GDOT's sole discretion, include a request for revised Proposals. GDOT will determine which Proposal is the Apparent Successful Proposer in accordance with the selection process set forth in this Section 5.

GDOT may, in its sole discretion, reject all Proposals or advertise for new Proposals, if, in the judgment of GDOT, the best interests of the public will be promoted by doing so.

5.1 Pass/Fail and Responsiveness Evaluation

Each Proposal will be reviewed (a) for responsiveness and (b) based on the pass/fail criteria set forth in this Section 5.1. Each Proposer must satisfy each pass/fail requirement set forth in Sections 5.1.2 through Sections 5.1.3 and be deemed to have submitted a responsive Proposal pursuant to Section 5.1.1 in order for GDOT to consider the Proposal responsive. Proposers are advised that failure to achieve a "pass" rating on any "pass/fail" factor will result in GDOT declaring the Proposal non-responsive and Proposer being disqualified. Prior to making such determination, GDOT may, in its sole discretion, request clarifications of the information submitted in the Proposal (*see* Section 5.3).

5.1.1 Responsiveness

Each Proposal will be reviewed for conformance and responsiveness to the requirements set forth in the RFP. Proposers that GDOT determines are non-responsive to the RFP may be excluded from further consideration. Proposers will be advised regarding a determination of non-responsiveness.

5.1.2 Administrative Pass/Fail Requirements

The Administrative Proposal will be reviewed for conformance on a pass/fail basis to determine if it meets the requirements of Exhibit B.

5.1.3 Technical Proposal Pass/Fail Requirements

The Technical Proposal will be reviewed for conformance on a pass/fail basis to determine if it meets the requirements of Exhibit C.

5.2 Price Evaluation

The Proposer submitting the Lowest Qualified Price Proposal shall be the apparent Successful Proposer.

5.3 Requests for Clarification

GDOT may at any time issue one or more Requests for Clarification (RFC) to the individual Proposers, requesting additional information or clarification from a Proposer, or may request a Proposer to verify or certify certain aspects of its Proposal. Any requests for clarification shall be in writing to Proposer's designated representative. Proposers shall respond to any such requests within two (2) Business Days (or such other time as is specified by GDOT) from receipt of the request. The scope, length and topics to be addressed in clarifications shall be prescribed by, and subject to the discretion of, GDOT.

Upon receipt of requested clarifications and additional information as described above, if any, the Proposals may be re-evaluated to factor in the clarifications and additional information.

5.4 Request for Proposal Revisions

GDOT may, at any time after receipt of Proposals and prior to final award, determine that it is appropriate to request changes to the Proposals ("Proposal Revisions"). If Proposal Revisions are requested, GDOT will follow the requirements described in 23 CFR Part 636. GDOT may request Proposal Revisions with or without discussions as described therein. The request for Proposal Revisions will identify any revisions to the RFP and will specify terms and conditions applicable to the Proposal Revisions, including identifying a time and date for delivery. In the event that Proposal Revisions are requested, the term "Proposal," as used in the RFP, shall mean the original Proposal, as modified by the Proposal Revisions.

5.5 Proposal Re-evaluation following Revisions

Upon receipt of Proposal Revisions pursuant to Section 5.4 above, GDOT will re-evaluate the Proposals as revised in accordance with the methodology described in Section 5.1.

5.6 Payment and Performance Bonding Requirements

On the Effective Date of DB Agreement, Proposer shall, at its option, cause Design-Build Team to deliver to GDOT P&P Bonds in compliance with GDOT Specification 103.05.

SECTION 6.0 AGREEMENT AWARD AND EXECUTION

6.1 No Obligation to Award

GDOT shall be under no obligation to award the DB Documents to any Proposer or to award the DB Documents at all.

6.2 Award and Execution

Unless GDOT rejects all Proposals or cancels this procurement, GDOT shall select as the Apparent Successful Proposer the Proposer with the apparent Successful Proposal, taking into consideration the evaluation criteria and procedures set forth in Section 5. GDOT's selection of Apparent Successful Proposer with respect to the DB Documents shall be deemed to have occurred upon public notification of such selection.

Following such selection of apparent Successful Proposer, GDOT and the apparent Successful Proposer shall finalize the executable versions of the DB Documents, filling in blanks and inserting information that the forms of the DB Documents indicate is required from the Proposal. By submitting its Proposal, each Proposer commits to enter

into the form of DB Documents included in the RFP, without variation, except as provided in this paragraph.

6.2.1 Delivery of Drafts, Execution of DB Documents, Etc.

Within twenty (20) days of GDOT's selection of the apparent Successful Proposer, such apparent Successful Proposer shall:

(a) deliver to GDOT specimens of the insurance policies required under the DB Agreement for GDOT's review and approval; and

(b) if the Successful Proposer is a Joint Venture or Partnership, identify the attorney or law firm that will provide the legal opinions set forth on Form S hereto to be delivered concurrently with GDOT's execution of the DB Agreement and provide a draft opinion letter (consistent with such on Form S) to GDOT for GDOT' s approval, not to be unreasonably withheld. Such opinion letter may be rendered by in-house or outside counsel, provided that (i) the organization/authorization/execution opinion shall be provided by an attorney licensed in the state of the formation/organization of the entity for which the opinion is rendered (i.e., Design-Build Team, joint venture member, etc.) and (ii) the qualification to do business in Georgia and the enforceability opinion shall be provided by an attorney licensed in the state of Georgia, provided, however, that the organization/authorization/execution opinion for an entity formed or organized under the laws of the State of Delaware may be issued by an in-house or outside counsel not licensed in Delaware.

(c) Notify GDOT in writing of the name and address of its agent for service of legal process for this Project. Proposer shall not change this authorized agent without prior written notice to GDOT;

(d) If applicable, complete the establishment of the single purpose entity for the Project and submit certified copies of the single purpose entity-related documents to GDOT as described in Section 1.12;

(e) Notify GDOT in writing of Proposer's Federal Internal Revenue Service Employer Identification Number;

(f) Deliver to GDOT six (6) executed sets of the DB Agreement, together with evidence as to the authority, power, and capacity of the individuals executing the DB Documents to bind Proposer to the DB Documents;

(g) Deliver to GDOT P&P Bonds meeting the requirements of GDOT Specification 103.05.

(h) Deliver to GDOT evidence of insurance required to be provided by Design-Build Team under the DB Documents;

Should the Apparent Successful Proposer fail to comply with any of the requirements in this Section 6.2.1, GDOT shall call upon the Apparent Successful Proposer's Proposal Guaranty in its entirety, *provided* that Proposer's time period to satisfy the requirements of this Section 6.2.1 shall be extended by the period of delay in Proposer's ability to execute the DB Agreement solely and directly caused by the issuance of a temporary restraining order or other form of injunction by a court with jurisdiction that prohibits prosecution of any portion of the Project.

Proposer acknowledges that the forfeiture of the Proposal Guaranty constitutes liquidated damages and is not a penalty, and the amount forfeited is fair and reasonable and such payment represents a reasonable estimate of fair compensation to GDOT for the work required to procure the Project and the reputational losses which may accrue.

It is contemplated that GDOT will execute the DB Agreement no later than thirty (30) days after selection of the apparent Successful Proposer, subject to such apparent Successful Proposer's compliance with the terms of this Section 6.2.1. GDOT will retain four (4) sets of the executed DB Documents, GDOT will deliver one executed set to FHWA (for Projects of Division Interest only), and GDOT will deliver one (1) executed set to Proposer. Concurrently with GDOT's execution of the DB Agreement, the Design-Build Team will provide to GDOT the legal opinion in the form, and from the counsel, previously approved by GDOT. Each of the DB Documents will not be effective until it has been fully executed by all of the parties thereto.

6.2.2 Initial Successful Proposer's Failure to Comply

If the initial Successful Proposer fails to comply with the requirements of Section 6.2.1, GDOT may (in its sole discretion) award the DB Documents to the Proposer whose Proposal was the next Apparent Successful Proposer, re-advertise and complete the Work under a different contract, cancel the Project or pursue any other option it chooses.

6.3 Reserved

6.4 Debriefing of Unsuccessful Proposers

GDOT shall debrief Unsuccessful Proposers upon their written request submitted to the Point of Contact no later than thirty (30) calendar days after GDOT's issuance of NTP 1 for the Project. Written requests for debriefing must be submitted within thirty (30) calendar days of the GDOT Design-Build Project award announcement. Email requests are considered acceptable.

GDOT will prepare a summary of the requesting Proposer's relevant evaluation information. GDOT will provide the information in writing to the requesting Proposer within thirty (30) calendar days after GDOT issuance of the Project's NTP 1.

6.5 Reserved

SECTION 7.0 NON-RESPONSESIVE TECHNICAL PROPOSAL PROCEDURES

7.1 GDOT's Responsibilities

In the event GDOT deems a Proposer's Technical Proposal non-responsive, GDOT shall, within two (2) business days of such determination, provide each non-responsive Proposer a written explanation as to the reason(s) that their Technical Proposal was deemed non-responsive. An email is considered a proper written notification.

7.2 Proposer's Responsibilities

Upon receipt of GDOT's written explanation, the Proposer shall have five (5) business days to request GDOT reconsider the non-responsiveness determination. The Proposer's request shall be in writing to the Chief Engineer; shall clearly state the reasons the Proposer believes that GDOT's determination is in error; and shall include supporting documentation as the Proposer deems appropriate.

7.3 Technical Proposal Resolution

Upon GDOT's receipt of a Proposer's written request for reconsideration of the non-responsiveness determination, GDOT will respond in writing with a final determination or an estimate of when a final determination will be made within three (3) business days.

7.4 Time Frames

The timeframes included are approximate, and may be modified by GDOT.

7.5 Costs and Damages

All costs of a Proposer for requests for GDOT to reconsider the non-responsiveness determination shall be the responsibility of the Proposer and undertaken at the Proposer's expense.

SECTION 8.0 GDOT'S RIGHTS AND DISCLAIMERS

8.1 GDOT's Rights

In connection with this procurement, GDOT reserves to itself all rights (which rights shall be exercisable by GDOT in its sole discretion) available to it under applicable law, including without limitation, with or without cause and with or without notice, the right to:

(a) Develop the Project in any manner that it, in its sole discretion, deems necessary. If GDOT does not execute the DB Agreement with Proposer that submitted the apparent Successful Proposal, GDOT may proceed to

the next highest rated Proposer, terminate this procurement and pursue other development or solicitations relating to the Project, or exercise such other rights under the provisions of State law as it deems appropriate;

(b) Investigate the qualifications of any Proposer under consideration, require confirmation of information furnished by a Proposer, require additional information concerning a Proposer's Proposal, require additional evidence of qualifications to perform the Work, and seek or obtain data from any source that has the potential to improve the understanding and evaluation of the Proposals;

(c) Reject all Proposals;

(d) Reject any Proposals received for non-responsiveness to or non-compliance with the RFP requirements;

(e) Issue a new RFP;

(f) Cancel, modify, or withdraw the RFP in whole or in part at any time prior to the execution of the DB Documents, including adding or deleting Proposer responsibilities contained in the RFP;

(g) Modify all dates set or projected in the RFP, including this ITP;

(h) Issue Addenda;

(i) Disqualify any Proposer who changes its Proposal, members of its team or key personnel without GDOT approval;

(j) Appoint evaluation committees to review Proposals and seek the assistance of outside technical experts and consultants in evaluating the Proposals;

(k) Accept and review non-conforming Proposals or seek and receive clarifications or supplements to a Proposal;

(l) Waive minor irregularities in Proposals. Minor irregularities are defined as those that will not have an adverse effect on GDOT's interest and will not give a Proposer an advantage or benefit not enjoyed by other Proposers;

(m) Suspend and terminate the procurement at any time; and/or

(n) Exercise any other right reserved or afforded to GDOT under this ITP and applicable law.

8.2 Disclaimers

The RFP does not commit GDOT to enter into a DB Agreement, nor does it obligate GDOT to pay for any costs incurred in preparation and submission of Proposal(s) or in anticipation of the DB Documents. By submitting a Proposal, a Proposer disclaims any right to be paid for such costs, except for payments related to the Payment for Work Product.

The execution and performance of the DB Documents pursuant to the RFP is contingent upon sufficient appropriations and authorizations being made by the Georgia General Assembly for performance of the DB Agreement between the successful Proposer and GDOT.

In no event shall GDOT be bound by, or be liable for, any obligations regarding the Work or the Project until such time (if at all) as the DB Documents have been executed, authorized and delivered.

In submitting a Proposal in response to the RFP, Proposer is specifically acknowledging these disclaimers.

EXHIBIT A

Reserved

EXHIBIT B

ADMINISTRATIVE INFORMATION SUBMITTAL REQUIREMENTS

B.1 General Instructions

This Exhibit B describes the required information and submission format regarding Administrative Information Submittals. Proposers shall submit the administrative information required by this Exhibit B, separated and labeled appropriately. The Administrative Information Submittals shall be limited to the page limitations (if any) specified for that submittal.

B.2 Contents of the Administrative Information Submittals

Proposers are to provide all information set out in this Exhibit B.

The Administrative Information Submittals shall consist of the following major elements: the Executive Summary; Proposer information, certifications and documents (including required forms);

B.2.1. Executive Summary

The Executive Summary shall be written in a non-technical style and shall contain sufficient information for reviewers with both technical and non-technical backgrounds to become familiar with Proposer's Proposal and its ability to satisfy the technical requirements of the Project. The Executive Summary shall not exceed five pages and shall be in at least 12-point type.

The Executive Summary shall, at a minimum, include the following:

(a) A summary of the Project Development Plan, including:

i A summary of the proposed management, decision making, and day-to-day operation structure of Proposer, and a statement that each Participating Member and Major Non-Participating Member has committed to provide the specified people;

ii A summary of Proposer's approach to addressing environmental sensitivity and safety;

iii A summary of Proposer's approach to addressing Utility Adjustments;

iv A summary of Proposer's Preliminary Baseline Schedule, key milestones, anticipated milestones for design and construction (and maintenance during construction);

v A summary of Proposer's approach for delivering the design and construction components of the Project;

vi A summary of Proposer's approach to quality management of the Project throughout the duration of the DB Agreement; and

vii A summary of Proposer's approach to construction sequencing, traffic management and mobility during construction.

(b) A summary of the Project Management Plan and a general description of its substantive contents;

(c) A summary of Proposer's approach for working with GDOT and third parties in conjunction with Proposer's Project Development Plan; and

(d) A summary of Proposer's strategy for environmental compliance, monitoring, and mitigation to support GDOT in fulfilling the NEPA process and environmental commitments for each segment and the overall Project.

Proposer shall attach to the Executive Summary the following two organizational tables:

(a) A table indicating the roles of the Participating Members and Major Non-Participating Members and their shares of ownership of any joint venture entities; and

(b) A table showing the relationship between any of the Participating Members and Major Non-Participating Members.

These tables shall not count towards the page limit for the Executive Summary.

B.2.2. Proposer Information, Certifications and Documents

B.2.2.1 Proposal Letter – Form A

The Proposal shall include the Proposal Letter (Form A). Proposer shall attach to the Proposal Letter evidence of authorization to execute and deliver the Proposal and the DB Agreement, shall identify its authorized representative(s) and shall include all necessary authorization documents (as requested in the Proposal Letter – Form A).

B.2.2.2 Design-Build Price Proposal – Electronic Bidding

The Proposer shall follow all instructions contained in Exhibit D.4 for submission of their Price Proposal.

B.2.2.3 Participating Members, Contractors and Key Personnel Commitment – Form G

The Proposal shall include a completed Form G confirming the identity, current availability and commitment to the Project of the Participating Members, Major Non-Participating Members and Key Personnel for the Major Non-Participating Members that were listed by Proposer in the SOQ, subsequently approved in writing by GDOT in accordance the procedures set forth in this ITP.

B.2.2.4 Buy America Certification – Form J

The Proposal shall include an executed copy of Form J, regarding federal "Buy America" requirements.

B.2.2.5 Use of Contract Funds for Lobbying Certification – Form K

The Proposal shall include an executed copy of Form K, regarding use of contract funds for lobbying.

B.2.2.6 Debarment and Suspension Certification – Form L

The Proposal shall include an executed copy of Form L, regarding debarment and suspension of contractors.

B.2.2.7 Changes in Proposer's Organization

The Proposal shall include a copy of the letter(s) (if any) issued by GDOT approving changes to the composition of Proposer's team (including additions to a Proposer team) following GDOT's decision to qualify Proposer. Such approval is required under Section 2.7 of the ITP. If Proposer includes any such letter(s), it shall also include a brief description (two page maximum) of these changes.

~~**NO LETTER DELIVERED UNDER THIS SECTION B.2.2.12 SHALL SET FORTH THE ACTUAL AMOUNT OF THE PROPOSED DB CONTRACT SUM, BUT SHALL, IF APPROPRIATE UNDER SECTION 5.6(a)(ii) OF THE ITP, MAKE REFERENCE TO THE "DB CONTRACT SUM AS SET FORTH IN THE PROPOSAL."**~~

B.2.2.8 Draft Single Purpose Entity Corporate Formation Documents

If Proposer contemplates the creation of one or more single purpose entities as the party to execute the DB Contracts, the Proposal shall include a statement acknowledging that the organizational documents for the single purpose entity(ies) will be provided within 60 days of GDOT's award pursuant to Section 6.2.1 of the ITP and the Proposal shall include applicable draft documents for such entity.

B.2.2.9 Executed Copy of Partnering/Consortium Agreement

If Proposer is a consortium, partnership or any other form of joint venture, the Proposal shall contain an executed teaming agreement or, if the entities making up Proposer have not executed a teaming agreement, a summary of the key terms of the anticipated agreement.

B.2.2.10 Reserved

B.2.2.11 Request for Eligibility to Bid~~ – Form O~~

The Proposal shall include an executed copy of ~~Form O, regarding~~the Proposer's Eligibility to Bid on the Project.

~~**B.2.2.12 Georgia Immigration Security and Compliance Act Affidavit – Form R**~~

~~The Proposal shall include an executed copy of Form R, regarding participation in the Employment Eligibility Verification Program.~~

B.2.3. Other Financial Capacity Information (For Single Purpose Entities or Joint Ventures Only)

(a) **Newly Formed Entity** - If the Proposer is a newly formed entity and does not have independent financial statements, financial statements for the Participating Members and Major Non-Participating Members (if any) and, if applicable, any joint ventures making up the Major Non-Participating Members, shall be sufficient (and the Proposer shall expressly state that the Proposer is a newly formed entity and does not have independent financial statements – but shall nonetheless provide sufficient background information on such entity – i.e. organizational, legal, ownership structure, initial funding, purpose, etc.).

(b) **SEC Filings** - If any other entity for whom financial information is submitted hereby files reports with the Securities and Exchange Commission, then such reports shall be provided through a copy of their annual report on Form 10-K. Also, for all subsequent quarters, provide a copy of any report filed on Form 10-Q or Form 8-K which has been filed since the latest filed 10-K. If any of these reports have previously been submitted to GDOT during the procurement process, they are not required to be resubmitted.

(c) **Material Changes in Financial Condition -** A letter from the chief financial officer ("CFO") or treasurer of Proposer, each Participating Members, each Major Non-Participating Members (if any), each joint venture making up the Major Non-Participating Members (if applicable) and each Guarantor, in each case providing information on any material changes in financial condition of such entity and, if applicable, its direct or indirect parent entities, since submission of the SOQs and those that are pending. Additionally, Proposers shall be required to provide updated financial information following the Proposal Due Date as long as the dissemination of such information is permitted by law.

At the discretion of GDOT, any failure to disclose a prior or pending material change may result in disqualification from further participation in the selection process. In instances where a material change has occurred, or is anticipated, the affected entity shall provide a statement describing each material change in detail, the likelihood that the developments will continue during the period of performance of the project development, and the projected full extent of the changes likely to be experienced in the periods ahead. Estimates of the impact on revenues, expenses and the change in equity shall be provided separately for each material change as certified by the CFO or treasurer. References to the notes in the financial statements are not sufficient to address the requirement to discuss the impact of material changes. The affected entity shall also provide a discussion of measures that would be undertaken to insulate the project from any recent material adverse changes, and those currently in progress or reasonably anticipated in the future. If the financial statements indicate that expenses and losses exceed income in the periods between submission of the SOQs and the most recent completed periods (even if there has not been a material change), the affected entity shall provide a discussion of measures that will be undertaken to make the entity profitable in the future and an estimate of when the entity will be profitable.

The following list identifies certain items that GDOT would consider a material change in financial condition. **This list is intended to be indicative only.**

List of Indicative Material Changes:

- An event of default or bankruptcy involving the affected entity, a related business unit within the same corporation, or the parent corporation of the affected entity.
- A downward change in tangible net worth of ten percent (10%) of shareholder equity.
- A sale, merger or acquisition exceeding ten percent (10%) of the value of shareholder equity prior to the sale, merger or acquisition which in any way involves the affected entity, a related business unit, or parent corporation of the affected entity.
- A downward change in credit rating for the affected entity, a related business unit, or parent corporation of the affected entity.
- Inability to meet conditions of loan or debt covenants by the affected entity, a related business unit or parent corporation of the affected entity which has required or will require a waiver or modification of agreed loan stipulations, or additional credit support from shareholders or other third parties.
- The affected entity, a related business unit in the same corporation, or the parent corporation of the affected entity either: (i) incurred a net operating loss; (ii) sustained charges exceeding 5% of the then shareholder equity due to claims, changes in accounting, write-offs or business restructuring; or (iii) implemented a restructuring/reduction in salaried personnel exceeding 200 positions or involving the disposition of assets exceeding 10% of the then shareholder equity.
- Other events known to the affected entity, a related business unit or parent corporation of the affected entity which represents a material change in financial condition since submission of the SOQs or may be pending for the next reporting period.

(d) **Letter of Parent Company Support -** Where a Participating Member or Major Non-Participating Member of a Proposer team is a subsidiary of another company, provide a letter from the parent company, signed by a parent company officer, confirming their intention to support the subsidiary's participation in the Project. This letter must clearly state that the parent company will provide the financial support and human resources needed by the subsidiary to successfully carry out the Project.

(e) **Off-Balance Sheet Liabilities** - A letter from the CFO, treasurer or certified public accountant for each entity for which financial information is submitted, identifying all material off balance sheet liabilities; and

(f) **Non-recourse financing -** A letter from the CFO, treasurer or certified public accountant for each entity for which financial information is submitted, identifying the amount of non-recourse financing on the balance sheet.

The information required under this Section B.2.3 shall be packaged separately for each separate entity with a cover sheet identifying the name of the organization and its role in Proposer's organization (i.e., Participating Member).

B.3 No DB Contract Sum Information

NO PART OF THE ADMINISTRATIVE INFORMATION ~~(INCLUDING, WITHOUT LIMITATION, DELIVERABLES UNDER SECTIONS B.2.2.12 OR B.2.2.13)~~ SHOULD CONTAIN THE PROPOSER'S PROPOSED DB CONTRACT SUM OR OTHER INFORMATION THAT WOULD ALLOW SUCH DB CONTRACT SUM TO BE CALCULATED.

EXHIBIT C

TECHNICAL PROPOSAL SUBMITTAL REQUIREMENTS

Proposer shall submit the Technical Proposal in accordance with this Exhibit C. The Technical Proposal shall be separated and labeled appropriately and organized. Proposers shall not amend the order or change the contents of the checklist except to provide the required cross reference to their respective Proposal. The Technical Proposal shall be limited to an aggregate of twenty (20) pages, including appendices and exhibits containing required forms, graphs, any matrices and pertinent data. Charts, graphs, figures and matrices may be submitted on 11"X17" sheets. Such 11"X17" sheets will be counted as one. Proposer may provide charts, graphs, figures and matrices in a legible format 11"X17" or larger to assist in GDOT's review. Schedules and drawings will not be counted as part of the aggregate twenty (20) pages. Dividing sheets and tabs will not count toward the maximum page limit, provided they do not include any additional qualitative information about Proposer.

The Technical Proposal shall include the following:

C.1 Preliminary Baseline Schedule/Construction Phasing Plan

(a) The Preliminary Baseline Schedule shall show the overall approach and provide detail activities to the design, construction phasing, planning, scheduling, and execution of the Work, for the period between NTP 1 and Final Acceptance. The Preliminary Baseline Schedule shall show in detail the Proposer's Work activities with all remaining Work being represented by phase level summary activities such that they cumulatively indicate all Work The schedule shall indicate the milestone dates in Exhibit 9 of the DB Agreement and the critical path achieve Substantial Completion and Final Acceptance. The Preliminary Baseline Schedule shall be in general conformance with the Work Breakdown Structure provided in Section 2 of the Technical Provisions.

(b) The narrative shall also discuss any Construction Phasing that is proposed.

(c) The Preliminary Baseline Schedule shall be the basis of the development and submittal of the Project Baseline Schedule as set forth in Section 2 requirements of the Technical Provisions. The Preliminary Baseline Schedule shall be created and developed in the allowable programming software as required in Section 2 of the Technical Provisions.

C.2 Project Differences from Reference Information Documents (RID) (if applicable)

(a) Proposal shall indicate how their approach to design and construction of the project differs materially from the design indicated in any of the RID.

EXHIBIT D

PRICE PROPOSAL SUBMITTAL REQUIREMENTS

Proposer shall submit the Price Proposal in accordance with this Exhibit D. The Price Proposal shall be separated and labeled appropriately and organized.

D.1 General Instructions

This Exhibit D describes the required information and submission format for the Price Proposal.

Proposer shall submit the information required by this Exhibit D in the format specified herein.

All Forms named herein are attached to the ITP. All blank spaces in the Proposal Forms must be filled in as appropriate. No substantive change shall be made in the Proposal Forms.

D.2 Format of Price Proposal

All financial information provided in the Price Proposal shall be in U.S. Dollar currency only and all amounts shall be clearly identified as nominal dollars.

D.3 Verification

Each Proposer shall satisfy itself as to the costs and tax consequences of entering into a DB Agreement. GDOT makes no representations or warranties, express or implied, and assumes no liability whatsoever, with respect to costs or the consequences of federal or state income tax treatment of Design-Build team under the DB Agreement.

D.4 Electronic submittal of Price Proposal

Refer to GDOT Special Provision 102.06 for instructions regarding submission of the Price Proposal.

EXHIBIT E

Reserved

EXHIBIT F

Reserved

EXHIBIT G

LIST OF GDOT PROJECT TEAM

- HNTB Corporation
- ARCADIS

EXHIBIT H

LIST OF REFERENCE INFORMATION DOCUMENTS

RID or RFP List Title	Proposed RID Documents	Date Issued
RID	Project Synopsis	09/18/2015
RID	Concept Report	10/24/2014
RID	Costing Plans	10/24/2014
RID	Design Exceptions-Variances	10/24/2014
RID	Existing Bridge Deck Condition Reports	10/24/2014
RID	MS4 Infeasibility Report	10/24/2014
RID	Pavement Design Documents	10/24/2014
RID	Right of Way Plans	10/24/2014
RID	Subsurface Utility Engineering (SUE)	10/24/2014
RID	Survey Database	10/24/2014
RID	Traffic Study	10/24/2014
RID	Approved Proprietary Items for Lighting	10/29/2014
~~RID~~	~~Approved Traffic Study~~	~~10/24/2014~~
~~RID~~	~~Approved Survey Files~~	~~10/24/2014~~
~~RID~~	~~Approved Subsurface Utility Files~~	~~10/24/2014~~
RID	~~Concept Report~~	~~10/24/2014~~
RID	~~Costing Plans~~	~~10/24/2014~~
RID	Landscaping Conceptual Layout	01/08/2015
RID	Microstation Files	01/08/2015
RID	Schedule Template	01/08/2015
RID	Shelf Specs and SP	01/08/2015
RID	Utility UAPRR	01/08/2015
RID	Environmental	02/10/2015
RID	MOUs and Agreements	02/10/2015

RID or RFP List Title	Proposed RID Documents	Date Issued

RID or RFP List Title	Proposed RID Documents	Date Issued

RID or RFP List Title	Proposed RID Documents	Date Issued

FORM A

Proposal Letter

PROPOSER: _____

Proposal Date: _____, 201_

Georgia Department of Transportation
One Georgia Center
600 West Peachtree Street, NW
Atlanta, Georgia 30308

The undersigned (**"Proposer"**) submits this proposal (this **"Proposal"**) in response to that certain Request for Proposals (the "**RFP**") issued by the Georgia Department of Transportation (**"GDOT"**), an agency of the State of Georgia, dated August 22, 2014, as amended, to develop the I-285 Ramps at CR 209/ Riverside Drive Project (the "**Project**"), as more specifically described herein and in the documents provided with the RFP. Initially capitalized terms not otherwise defined herein shall have the meanings set forth in the RFP.

In consideration for GDOT supplying us, at our request, with the RFP and agreeing to examine and consider this Proposal, the undersigned undertakes [jointly and severally] ***[if Proposer is a joint venture or association other than a corporation, limited liability company or a partnership, leave in the words "jointly and severally," otherwise delete]***:

a) to keep this Proposal open for acceptance for a period of fifty (50) days without unilaterally varying or amending its terms and without any member or partner withdrawing or any other change being made in the composition of the partnership/joint venture/limited liability company/consortium on whose behalf this Proposal is submitted, without first obtaining the prior written consent of GDOT, in GDOT's sole discretion; and

b) to provide security (including bonds and insurance) for the due performance of the Design Build Agreement (the **"DB Agreement"**) as stipulated therein.

If selected by GDOT, Proposer agrees to: (a) enter into the DB Agreement and satisfy all other conditions to award of the DB Agreement as set forth in Section 6 of the Instructions to Proposers (**"ITP"**) included in the RFP; and (b) perform its obligations as set forth in the DB Agreement, including compliance with all commitments contained in this Proposal.

Enclosed, and by this reference incorporated herein and made a part of this Proposal, are the following Proposal components:

- Executive Summary;
- Administrative Information Submittals;
- Technical Proposal; and
- Price Proposal

Proposer acknowledges receipt, understanding and full consideration of the following:

- ***[list any addenda to the RFP and sets of questions and answers by dates and numbers]***

Proposer certifies the following: the Proposal is submitted without reservation, qualification, assumptions or conditions; Proposer has carefully examined and is fully familiar with all of the RFP documents and is satisfied that the RFP documents provide sufficient detail regarding the intended "Design-Build Team's" obligations and do not contain internal inconsistencies; Proposer has carefully checked all the words, figures and statements in the Proposal; Proposer has conducted such other field investigations and additional design development as is prudent and reasonable in preparing this Proposal; Proposer has requested clarification or interpretation with respect to any perceived deficiency in or omission from the RFP documents or other documents provided by GDOT; and Proposer has notified GDOT of any unusual site conditions observed prior to the date hereof.

Proposer represents that all statements made in the Statement of Qualifications previously delivered to GDOT by Proposer are true, correct and accurate as of the date hereof, except as otherwise specified in the enclosed Proposal and Proposal forms. Proposer agrees that such Statement of Qualifications, except as modified by the enclosed Proposal and Proposal forms, is incorporated as if fully set forth herein.

Proposer understands that GDOT is not bound to award the DB Agreement to the Proposer submitting the Proposal with the lowest proposed bid, the highest scoring Proposal, or any Proposal GDOT may receive.

Except for any payment for Work Product paid to Proposer in accordance with the ITP and the separate Contractual Services Certification, Proposer further understands that all costs and expenses incurred by it in preparing this Proposal and participating in the RFP process will be borne solely by the Proposer.

Proposer agrees that GDOT will not be responsible for any errors, omissions, inaccuracies or incomplete statements in the Proposal.

The Proposal shall be governed by and construed in all respects according to the laws of the State of Georgia.

Proposer's business address:

_____
(No.) (Street) (Floor or Suite)

_____
(City) (State or Province) (ZIP or Postal Code) (Country)

State or Country of Incorporation/Formation/Organization: _____

[insert appropriate signature block from following pages]

1. Sample signature block for corporation or limited liability company:

[Insert the Proposer's name]

By: _____

Print Name: _____

Title: _____

2. Sample signature block for partnership or joint venture:

[Insert the Proposer's name]

By: *[Insert general partner's or member's name]*

By: _____

Print Name: _____

Title: _____

[Add signatures of additional general partners or members as appropriate]

3. Sample signature block for attorney in fact:

[Insert the Proposer's name]

By: _____

Print Name: _____
Attorney in Fact

ADDITIONAL REQUIREMENTS FOR SINGLE PURPOSE ENTITIES AND JOINT VENTURES ONLY:

A. If the Proposer is a corporation, enter the state or country of incorporation in addition to the business address. If the Proposer is a partnership, enter the state or country of formation. If the Proposer is a limited liability company, enter the state or country of organization.

B. Describe in detail the legal and organizational structures of the entity making the Proposal.

1. Provide a table or tables showing the legal and organizational structure of the anticipated Design-Build Team and any Major Non-Participating Members entity. This table shall describe the role of all Participating Members, Major Non-Participating Members, and Contractors.

2. If the Proposer (or any member, partner or joint venturer of the Proposer) is a corporation or includes a corporation as a joint venturer, partner or member, provide articles of incorporation and bylaws for the Proposer and each corporation certified by an appropriate individual.

3. If the Proposer (or any member, partner or joint venturer of the Proposer) is a partnership or includes a partnership as a joint venturer, partner or member, attach full names and addresses of all partners and the equity ownership interest of each entity, provide the incorporation, formation and organizational documentation for the Proposer and each general partner (partnership agreement and certificate of partnership for a partnership, articles of incorporation and bylaws for a corporation, operating agreement for a limited liability company and joint venture agreement for a joint venture) certified by an appropriate individual.

4. If the Proposer (or any member, partner or joint venturer of the Proposer) is a joint venture or includes a joint venture as a joint venturer, partner or member, attach the full names and addresses of all joint venturers and the equity ownership interest of each entity, provide the incorporation, formation and organizational documentation for the Proposer and each joint venturer (partnership agreement and certificate of partnership for a partnership, articles of incorporation and bylaws for a corporation, operating agreement for a limited liability company and joint venture agreement for a joint venture) certified by an appropriate individual.

5. If the Proposer (or any member, partner or joint venturer of the Proposer) is a limited liability company or includes a limited liability company as a joint venturer, partner or member, attach full names and addresses of all members and the equity ownership interest of each entity, provide the incorporation, formation and organizational documentation for the Proposer and each member (partnership agreement and certificate of partnership for a partnership, articles of incorporation and bylaws for a corporation, operating agreement for a limited liability company and joint venture) certified by an appropriate individual. Attach evidence to the Proposal and to each letter that the person signing has authority to do so.

C. With respect to authorization of execution and delivery of the Proposal and validity thereof, if the Proposer is a corporation, it shall provide evidence in the form of a

resolution of its governing body certified by an appropriate officer of the corporation. If the Proposer is a partnership, such evidence shall be in the form of a partnership resolution and a general partner resolution (as to each general partner) providing such authorization, in each case, certified by an appropriate officer of the general partner. If the Proposer is a limited liability company, such evidence shall be in the form of a limited liability company resolution and a managing member(s) resolution providing such authorization, certified by an appropriate officer of the managing member(s). If there is no managing member, each member shall provide the foregoing information. If the Proposer is a joint venture, such evidence shall be in the form of a resolution of each joint venturer, certified by an appropriate officer of such joint venturer. If the Proposer is a joint venture or a partnership, the Proposal must be executed by all joint venture members or all general partners, as applicable.

D. The Proposer's partnership agreement, limited liability company operating agreement, and joint venture agreement, as applicable, must include an express provision satisfactory to GDOT, in its sole discretion, stating that, in the event of a dispute between or among joint venturers, partners or members, as applicable, no joint venturer, partner or member, as applicable, shall be entitled to stop, hinder or delay work on the Project. Proposers shall submit the applicable agreement to GDOT and identify on a cover page where in the agreement the provision can be found.

FORM B

RESERVED

FORM C

RESERVED

FORM D

Reserved

FORM E

RESERVED

FORM F

Reserved

FORM G

Form of Participating Members, Major Non-Participating Member, Contractors and Key Personnel Commitment

Proposer's Name: _____ (the "Proposer")

Proposer hereby commits that, if awarded the I-285 Ramps at CR 209/ Riverside Drive Project (the "**Project**"), the Proposer will use the entities and individuals listed below for their stated positions and that, to the extent within the Proposer's control, such entities and individuals will be available to fulfill their Project-related responsibilities.

Participating Member: _____

Participating Member: _____

Participating Member: _____

Lead Contractor: _____

- **Project Manager**: _____
- **Superintendent**: _____

Lead Engineering Firm: _____

- **Lead Design Engineer**: _____

Key Personnel: _____

_____

_____

Signed: _____

Printed Name: _____

Title: _____

Date: _____

FORM H

RESERVED

FORM I

RESERVED

FORM J

Buy America Certification

The undersigned Proposer hereby certifies on behalf of itself and all contractors (at all tiers) the following:

a. Proposer shall comply with the Federal Highway Administration ("FHWA") Buy America Requirements of 23 CFR 635.410, which permits FHWA participation in the DB Agreement only if domestic steel and iron will be used on the Project. To be considered domestic, all steel and iron used and all products manufactured from steel and iron must be produced in the United States and all manufacturing processes, including application of a coating, for these materials must occur in the United States. Coating includes all processes that protect or enhance the value of the material to which the coating is applied. This requirement does not preclude a minimal use of foreign steel and iron materials, provided the cost of such materials does not exceed 0.1% of the design-build contract price.

b. A false certification is a criminal act in violation of 18 U.S.C. 1001. Should this certification be investigated, Proposer has the burden of proof to establish that it is in compliance.

c. At Proposer's request, GDOT may, but is not obligated to, seek a waiver of Buy America requirements from FHWA if grounds for the waiver exist. However, Proposer certifies that it will comply with the applicable Buy America requirements if a waiver of those requirements is not available or not pursued by GDOT.

Date: _____

Signature:_____

Title:_____

Proposer's Name: _____

FORM K

Use of Contract Funds for Lobbying Certification

The undersigned Proposer certifies on behalf of itself and all contractors (at all tiers) the following:

1. The Proposer certifies, to the best of its knowledge and belief, that:

   a. No federal appropriated funds have been paid or will be paid, by or on behalf of the undersigned, to any person for influencing or attempting to influence an officer or employee of any federal agency, a Member of Congress, an officer or employee of Congress, or an employee of a Member of Congress in connection with the awarding of any federal contract, the making of any federal grant, the making of any federal loan, the entering into of any cooperative agreement, and the extension, continuation, renewal, amendment, or modification of any federal contract, grant, loan, or cooperative agreement.

   b. If any funds (other than federal appropriated funds) received by Proposer under the RFP or DB Agreement have been paid or will be paid to any person for influencing or attempting to influence an officer or employee of any federal agency, a Member of Congress, an officer or employee of Congress, or an employee of a Member of Congress in connection with any federal contract, grant, loan, or cooperative agreement, the undersigned shall complete and submit Standard Form-LLL, "Disclosure Form to Report Lobbying," in accordance with its instructions, and shall include a copy of said form in its proposal or bid, or submit it with the executed DB Agreement or any or Subcontract.

2. This certification is a material representation of fact upon which reliance was placed when this transaction was made or entered into. Submission of this certification is a prerequisite for making or entering into this transaction imposed by 31 U.S.C. 1352. Any person who fails to file the required certification shall be subject to a civil penalty of not less than ten thousand ($10,000) and not more than one hundred thousand ($100,000) for each such failure.

3. Proposer shall require that the language of this certification be included in all lower tier subcontracts which exceed one hundred thousand dollars ($100,000) and that all such recipients shall certify and disclose accordingly.

4. The undersigned certifies or affirms the truthfulness and accuracy of each statement of its certification and disclosure, if any. In addition, the undersigned understands and agrees that the provisions of 31 U.S.C. §3801, et seq., apply to this certification and disclosure, if any.

[Note: Pursuant to 31 U.S.C. §1352(c)(1)-(2)(A), any person who makes a prohibited expenditure or fails to file or amend a required certification or disclosure form shall be subject to a civil penalty of not less than ten thousand dollars ($10,000) and not more than one hundred thousand dollars ($100,000) for each expenditure or failure.]

Date: _____

Proposer: _____

Signature: _____

Title: _____

FORM L

Debarment and Suspension Certification

The undersigned Proposer certifies on behalf of itself, and all Participating Members, Major Non-Participating Members and Contractors identified by such Proposer as of the date hereof, as follows:

The undersigned certifies to the best of its knowledge and belief, that it and its principals:

a. Are not presently debarred, suspended, proposed for debarment, declared ineligible, or voluntarily excluded from covered transactions by any federal department or agency;

b. Have not within a 3-year period preceding this proposal been convicted of or had a civil judgment rendered against them for commission of fraud or a criminal offense in connection with obtaining, attempting to obtain, or performing a public (federal, State or local) transaction or contract under a public transaction; violation of federal or State antitrust statutes or commission of embezzlement, theft, forgery, bribery, falsification or destruction of records, making false statements, or receiving stolen property;

c. Are not presently indicted for or otherwise criminally or civilly charged by a governmental entity (federal, State or local) with commission of any of the offenses enumerated in paragraph 1b of this certification; and

d. Have not within a three (3) year period preceding this application/proposal had one or more public transactions (federal, State or local) terminated for cause or default.

Where the Proposer is unable to certify to any of the statements in this certification, it shall attach a certification to its proposal or bid stating that it is unable to provide the certification and explaining the reasons for such inability.

Date: _____

Proposer: _____

Signature: _____

Title: _____

FORM M

RESERVED

FORM N

RESERVED

FORM O

RESERVED

FORM P

Reserved

FORM Q

RESERVED

FORM R

RESERVED

FORM S

Opinion of Counsel

[Letterhead of independent law firm or in-house counsel – See Section 6.2.1 of the ITP for legal counsel requirements- If applicable]

Mr. Matthew Cline
Georgia Department of Transportation
One Georgia Center
600 West Peachtree Street, NW
Atlanta, Georgia 30308

Re: Design-Build Agreement for the I-285 Ramps at CR 209/ Riverside Drive Project (the "**Project**")

Dear Mr. Cline**,**

This letter is provided with regard to the Design-Build Agreement dated as of _____, ~~2014~~ 2015 (the "DB Agreement"), by and between the Georgia Department of Transportation (**"GDOT"**), an agency of the State of Georgia, and _____ (the "Design-Build Team") for the [Insert Project Name] Project (the "**Project**").

[Describe relationship to Design-Build Team and its joint venture members, general partners, members, as applicable, and any other entities whose approval is required in order to authorize execution of the DB Agreement.]

[This letter is provided to you pursuant to Section 6.2.1 of the Instructions to Proposers of that certain Request for Proposals issued by GDOT on [_____], ~~2014~~2015, as amended.]

In giving this opinion, we have examined _____. We have also considered such questions of law and we have examined such documents and instruments and certificates of public officials and individuals who participated in the procurement process as we have deemed necessary or advisable. *[if a certificate is used/obtained from Design-Build Team, such certificate shall also run in favor of GDOT, and shall be attached to the opinion]*

In giving this opinion, we have assumed that all items submitted to us or reviewed by us are genuine, accurate and complete, and if not originals, are true and correct copies of originals, and that all signatures on such items are genuine.

Subject to the foregoing, we are of the opinion that:

1. [opinion regarding organization/formation and existence of Design-Build Team and that Design-Build Team has corporate power to own its properties and assets, carry on its business, enter into the DB Agreement and to perform its obligations under the DB Agreement] *[if Design-Build Team is a partnership/joint venture, these opinions are also required for each of its joint venture members and general partners]*

2. [opinion regarding good standing and qualification to do business in the state of Georgia for Design-Build Team] [*if Design-Build Team is a partnership/joint venture, these opinions are also required for each of its joint venture members and general partners*]

3. [opinion that the DB Agreement have been duly authorized by all necessary corporate action on the part of Design-Build Team and the DB Agreement have been duly executed and delivered by Design-Build Team] *[if Design-Build Team is a partnership/joint venture, add: "and its joint venture members/general partners" after the first and second "Design-Build Team"]*

4. [opinion that the DB Agreement constitute a legal, valid and binding obligation of Design-Build Team enforceable against Design-Build Team in accordance with its terms] *[if Design-Build Team is a partnership/joint venture, add: "and its joint venture members/general partners" after the second "Design-Build Team"]*

5. [opinion that all required approvals have been obtained with respect to execution, delivery and performance of the DB Agreement; and that the DB Agreement do not conflict with any agreements to which Design-Build Team is a party *[if Design-Build Team is a partnership/joint venture, add: "and its joint venture members/general partners are a party"]* or with any orders, judgments or decrees by which Design-Build Team is bound *[if Design-Build Team is a partnership/joint venture, add: "and its joint venture members/general partners are bound"]*

6. [opinion that execution, delivery and performance of all obligations by Design-Build Team under the DB Agreement do not conflict with, and are authorized by, the articles of incorporation and bylaws of Design-Build Team *[if Design-Build Team is a partnership, replace "articles of incorporation and bylaws" with "partnership agreement and (if applicable) certificate of limited partnership"; if Design-Build Team is a joint venture, replace "articles of incorporation and bylaws" with "joint venture agreement"; if Design-Build Team is a limited liability company, replace "articles of incorporation and bylaws" with "operating agreement and certificate of formation"]*

7. [opinion that execution and delivery by Design-Build Team of the DB Agreement do not, and Design-Build Team's performance of its obligations under the DB Agreement will not, violate any current statute, rule or regulation applicable to Design-Build Team or to transactions of the type contemplated by the DB Agreement]

8. [opinion that the Design-Build Team Agreements (as applicable) have been duly authorized by all necessary corporate action on the part of Design-Build Team and such agreements have been duly executed and delivered by Design-Build Team] *[if Design-Build Team is a partnership/joint venture, add: "and its joint venture members/general partners" after the first and second "Design-Build Team"]*

9. [opinion that the Design-Build Team Agreements constitute legal, valid and binding obligations of Design-Build Team enforceable against Design-Build Team in accordance with their terms] *[if Design-Build Team is a partnership/joint venture, add: "and its joint venture members/general partners" after the second "Design-Build Team"*

DESIGN-BUILD AGREEMENT
FOR
I-285 RAMPS AT CR 209/ RIVERSIDE DRIVE PROJECT
PI No. 0010925

Between

Georgia Department of Transportation,

State of Georgia

and

_____,
a _____

TABLE OF CONTENTS

Article 1 DEFINITIONS; DB DOCUMENTS; ORDER OF PRECEDENCE; PRINCIPAL PROJECT DOCUMENTS 2
1.1 Abbreviations and Definitions 2
1.2 DB Documents; Order of Precedence 2
1.3 Order of Precedence of Project Management Plan 3
1.4 Reserved 3
1.5 Reference Information Documents 3

Article 2 GRANT OF AUTHORITY AND RIGHT OF WAY 4
2.1 Grant of Authority for Undertaking 4
2.2 Right of Way; Construction Easement; Ownership 4

Article 3 CONTRACT TIME 6
3.1 Term of Agreement 6
3.2 Project Schedule 6
3.3 Contract Time, Date of Commencement, and Notice to Proceed 6

Article 4 RESERVED 8

Article 5 DB CONTRACT SUM, PAYMENTS, AND PUBLIC FUNDS 8
5.1 Payment of DB Contract Sum 8
5.2 GDOT Monetary Obligations and Overall Limitation of Liability 9

Article 6 PROJECT PLANNING AND ACCEPTANCES; PROJECT ADMINISTRATION, REVIEW AND OVERSIGHT; PUBLIC INFORMATION 9
6.1 Preliminary Planning and Engineering Activities; Site Conditions 9
6.2 Governmental Approvals and Third Party Agreements 10
6.3 Review and Oversight 11
6.4 Community Outreach and Public Information 18

Article 7 DEVELOPMENT OF THE PROJECT 18
7.1 General Obligations of DB Team 18
7.2 Performance, Design and Construction Standards 19
7.3 Design Implementation and Submittals 20
7.4 Reserved. 21
7.5 Utility Adjustments 21
7.6 Conditions to Commencement of Construction Work 23
7.7 Substantial Completion, Punch List, Maintenance Acceptance 23
7.8 Hazardous Materials Management 25
7.9 Environmental Compliance 25
7.10 Meetings 26
7.11 Contractor Warranties and Correction of Non-Conforming and Defective Work 26
7.12 Reserved 27
7.13 Maintenance During Construction Work 27
7.14 For Best Value Projects Only: Impact of ATCs on the Project 27

Article 8 SECURITY AND INCIDENT RESPONSE 27

Article 9 MANAGEMENT SYSTEMS AND OVERSIGHT 28

9.1 Project Management Plan 28
9.2 Traffic Management 29

Article 10 CONTRACTING AND LABOR PRACTICES 30
10.1 Reserved. 30
10.2 Responsibility for Work, Contractors and Employees 30
10.3 Reserved. 30
10.4 Key Personnel 30
10.5 Reserved. 31
10.6 Labor Standards 31
10.7 Reserved. 31
10.8 Non-Discrimination; Equal Employment Opportunity 31
10.9 Disadvantaged Business Enterprise 32
10.10 Job Training Program 32
10.11 Prevailing Wages 32
10.12 Prompt Payment to Contractors and Pay When Paid Provisions 33
10.13 Suspension and Debarment 33
10.14 Uniforms 33

Article 11 RELATED AND OTHER FACILITIES 33
11.1 Integration with Related Transportation Facilities 33

Article 12 SAFETY COMPLIANCE 34
12.1 Safety Compliance 34

Article 13 RELIEF EVENTS; COMPENSATION EVENTS 35
13.1 Relief Events 35
13.2 Compensation Events 36
13.3 Mitigation 39

Article 14 GDOT CHANGES; DB TEAM CHANGES; DIRECTIVE LETTERS 39
14.1 GDOT Changes 40
14.2 DB Team Changes 41
14.3 Directive Letters 42
14.4 Final Relief Event And Compensation Event Determinations 42
14.5 Reserved 42

Article 15 REPRESENTATIONS AND COVENANTS 42
15.1 DB Team Representations and Covenants 42
15.2 GDOT Representations and Covenants 45
15.3 Survival of Representations and Covenants 45
15.4 Special Remedies for Mutual Breach of Representations and Covenants 45

Article 16 INSURANCE; PERFORMANCE SECURITY; INDEMNITY 46
16.1 Insurance 46
16.2 Performance and Payment Security 46
16.3 Reserved 47
16.4 Rerserved 47
16.5 Indemnity by DB Team 47
16.6 Defense and Indemnification Procedures 49

Article 17 DEFAULT; REMEDIES; CLAIM FOR ADJUSTMENTS AND DISPUTES 52
17.1 Default by DB Team; Cure Periods 52
17.2 Warning Notices 55
17.3 Remedies for DB Team Default 56
17.4 Liquidated Damages 63
17.5 Default by GDOT; Cure Periods 65
17.6 DB Team Remedies for GDOT Default 65
17.7 Reserved 67

Article 18 RESERVED 67

Article 19 TERMINATION 67
19.1 Termination for Convenience 67
19.2 Reserved 68
19.3 Termination for DB Team Default 68
19.4 Termination for GDOT Default, Suspension of Work, Force Majeure Event, or Materially Delayed Notice to Proceed 69
19.5 Termination Procedures and Duties 70
19.6 Reserved 71
19.7 Contracts and Agreements 72
19.8 Liability After Termination; Final Release 72
19.9 Exclusive Termination Rights 72
19.10 Access to Information 72
19.11 Termination by Court Ruling 72

Article 20 RESERVED 73

Article 21 ASSIGNMENT AND TRANSFER 73
21.1 Restrictions on Assignment, Subletting and Other Transfers 73
21.2 Standards and Procedures for GDOT Acceptance 73
21.3 Assignment by GDOT 74
21.4 Notice and Assumption 74
21.5 Change of Organization or Name 75

Article 22 RECORDS AND AUDITS; INTELLECTUAL PROPERTY 75
22.1 Maintenance and Inspection of Records 75
22.2 Audits 76
22.3 Open Government Laws and Freedom of Information Act 78
22.4 Intellectual Property 79
22.5 Reserved 80

Article 23 FEDERAL REQUIREMENTS 80
23.1 Compliance with Federal Requirements 80
23.2 Role of and Cooperation with FHWA 80

Article 24 MISCELLANEOUS 81
24.1 Taxes 81
24.2 Amendments 81
24.3 Waiver 81
24.4 Independent Contractor 82

24.5 Successors and Assigns 82
24.6 Designation of Representatives; Cooperation with Representatives 82
24.7 Survival 83
24.8 Limitation on Third Party Beneficiaries 83
24.9 No Personal Liability of GDOT Employees; No Tort Liability 83
24.10 Governing Law 83
24.11 Notices and Communications 83
24.12 Integration of DB Documents 85
24.13 Severability 85
24.14 Headings 85
24.15 Construction and Interpretation of the DB Documents 85
24.16 Usury Savings 86
24.17 Acceptance under DB Documents 87
24.18 Entire Agreement 87
24.19 Counterparts 87

LIST OF EXHIBITS

Exhibit 1 Abbreviations and Definitions

Exhibit 2 DB Team's Key Personnel – Executed Form G

Exhibit 3 Reserved

Exhibit 4 Existing Right of Way and Required Right of Way

Exhibit 5 Reserved

Exhibit 6 Reserved

Exhibit 7 Reserved

Exhibit 8 Federal Requirements

Exhibit 9 Milestone Schedule

Exhibit 10 Reserved

Exhibit 11 Hazardous Materials Risk Allocation Terms

Exhibit 12 Reserved

Exhibit 13 Reserved

Exhibit 14 DB Team's DBE Commitments List

Exhibit 15 Reserved

Exhibit 16 Reserved

Exhibit 17 Reserved

Exhibit 18 Measures of Liquidated Damages and Nonrefundable Deductions

Exhibit 19 Georgia Security and Immigration Compliance Act Affidavit

Exhibit 20 Terms for Termination Compensation

Exhibit 21 Reserved

Exhibit 22 Initial Designation of Authorized Representatives

VOLUMES

Volume 1 DB Agreement
Volume 2 Technical Provisions for DB Agreement
Volume 3 Programmatic Technical Provisions for DB Agreement

DESIGN-BUILD AGREEMENT
FOR I-285 RAMPS AT CR 209/ RIVERSIDE DRIVE PROJECT

This Design and Build Agreement for the I-285 Ramps at CR 209/ Riverside Drive Project (this "Agreement", or "DB Agreement" or the "DBA") is entered into and effective as of . ~~, 2014~~, 2015by and between the Georgia Department of Transportation ("GDOT"), an agency of the State of Georgia, and _____, a _____ ("DB Team").

RECITALS

A. Pursuant to Section 32-2-81, et seq. of the Official Code of Georgia Annotated (the "Code"), GDOT is authorized to "combine any or all of the environmental services, utility relocation services, right of way services, design services, and construction phases of a public road or other transportation purpose project into a single contract using a design-build procedure."

B. Pursuant to Section 32-2-81 of the Code, "the term 'design-build procedure' means a method of contracting under which the department contracts with another party for the party to both design and build the structures, facilities, systems, and other items specified in the contract." GDOT may use the design-build procedure for buildings, bridges and approaches, rail corridors, technology deployments, and limited or controlled access projects or projects that may be constructed within existing rights of way where the scope of work can be clearly defined or when a significant savings in project delivery time can be attained.

C. Pursuant to the provisions of the Code and Chapter 672-18 of the Rules of the State Department of Transportation (the "Rules"), GDOT issued a Request for Qualifications ("RFQ") on October 24, 2014, as amended, requesting submittals of a Statement of Qualifications ("SOQ") from respondents desiring to develop the I-285 Ramps at CR 209/ Riverside Drive (the "Project") through a Design-Build Agreement.

D. GDOT received three ~~(_____)~~ (3) responsive SOQ by, and subsequently Shortlisted or qualified three ~~(_____)~~ (3) responsive Proposers.

E. On December 19, 2014, GDOT issued to the shortlisted Proposers a Request for Proposals ("RFP") with respect to the Project.

F. On ~~October 17, 2014~~March 20, 2015, GDOT received responses to the RFP, including the response of _____ on behalf of DB Team (the "Proposal").

G. As part of the RFP, GDOT required that Shortlisted Proposers commit to entering into a DB Agreement with GDOT for the design and construction of the Project.

H. An RFP Techncial Review Committee comprised of GDOT staff determined the DB Team was the Proposer which best met the selection criteria contained in the RFP.

NOW, THEREFORE, in consideration of the Work to be performed by DB Team, and DB Team's financing obligations with respect thereto, the foregoing premises and the covenants and agreements set forth herein, the Parties hereby agree as follows:

Article 1 DEFINITIONS; DB DOCUMENTS; ORDER OF PRECEDENCE; PRINCIPAL PROJECT DOCUMENTS

1.1 Abbreviations and Definitions

Abbreviations and definitions for certain terms used in this Agreement and the other DB Documents are contained in Exhibit 1.

1.2 DB Documents; Order of Precedence

Each of the DB Documents is an essential part of the agreement between the Parties. The DB Documents are intended to be complementary and to be read together with this Agreement, as a complete agreement. Each of the DB Documents (other than this Agreement) is hereby expressly incorporated herein by reference.

1.2.1 Subject to Article 1.2.2, in the event of any conflict, ambiguity or inconsistency among the DB Documents, the order of precedence, from highest to lowest, shall be as follows:

1.2.1.1 Supplemental Agreements and Agreement amendments, and all exhibits, riders, and attachments thereto;

1.2.1.2 The Agreement (also referred to as Volume 1) and all exhibits thereto (other than Exhibit 2);

1.2.1.3 Volume 2 "Technical Provisions for DB Agreement" amendments, and all exhibits and attachments to such amendments;

1.2.1.4 Volume 2 "Technical Provisions for DB Agreement", and all exhibits and attachments to the Technical Provisions;

1.2.1.5 Volume 3 "Programmatic Technical Provisions for DB Agreement" amendments, and all exhibits and attachments to such amendments;

1.2.1.6 Volume 3 "Programmatic Technical Provisions for DB Agreement", and all exhibits and attachments thereto;

1.2.1.7 Volume 3 "Manuals (Technical Documents) amendments; provided that GDOT in its sole discretion may designate that such amendments or portions thereof take precedence over the Technical Provisions to the extent provided in Articles 7.2.5;

1.2.1.8 Volume 3 Manuals (Technical Documents);

1.2.1.9 DB Team's Proposal commitments set forth in Exhibit 2 hereto, including DB Team's schematic plan of the Project, to the extent specified in Exhibit 2 that certain provisions therein shall supersede the specified provisions of the other DB Documents. Moreover, if the Proposal, including DB Team's schematic plan, includes statements, offers, terms, concepts or designs that can reasonably be interpreted as offers to provide higher quality items than otherwise required by the other DB Documents or to perform services or meet standards in addition to or better than those otherwise required, or otherwise contains terms or designs which are more advantageous to GDOT than the requirements of the other DB Documents, as reasonably determined by GDOT, then DB Team's obligations hereunder shall

include compliance with all such statements, offers, terms, concepts and designs, which shall have the priority of Agreement amendments (Article 1.2.1.1) and Technical Provisions amendments (Article 1.2.1.3), as applicable.

1.2.2 If the DB Documents contain differing provisions on the same subject matter, the provisions that establish the higher quality manner or method of performing the Work or use more stringent standards will prevail. Additional details in a lower priority DB Document shall be given effect except to the extent they irreconcilably conflict with requirements, provisions and practices contained in the higher priority DB Document. If the DB Documents contain differing provisions on the same subject matter that cannot be reconciled by applying the foregoing rules, then the provisions (whether setting forth performance or prescriptive requirements) contained in the document of higher order of precedence shall prevail over the provisions (whether setting forth performance or prescriptive requirements) contained in the document of lower order of precedence.

1.2.3 Where there is an irreconcilable conflict among any standards, criteria, requirements, conditions, procedures, specifications or other provisions applicable to the Project set forth in one or more manual(s) or publication(s) referenced within a DB Document or set of DB Documents with the same order of priority (including within documents referenced therein), the standard, criterion, requirement, condition, procedure, specification or other provision offering higher quality or better performance will apply, unless GDOT in its sole discretion accepts otherwise in writing. If there is an irreconcilable conflict between manuals or publications referenced in DB Document of differing priorities, the order of precedence set forth in Article 1.2.1 will apply. If either Party becomes aware of any such conflict, it shall promptly notify the other party of the conflict in writing. GDOT shall issue a written determination respecting which of the conflicting items is to apply promptly after it becomes aware of any such conflict.

1.3 Order of Precedence of Project Management Plan

In the event of any conflict, ambiguity or inconsistency between the Project Management Plan and any of the DB Documents, the latter shall take precedence and control.

1.4 Reserved

1.5 Reference Information Documents

1.5.1 DB Team acknowledges that GDOT has provided and disclosed to DB Team the Reference Information Documents ("RID"). The RID are not mandatory or binding on DB Team. DB Team is not entitled to rely on the RID as presenting design, engineering, operating or maintenance solutions or other direction, means or methods for complying with the requirements of the DB Documents, Governmental Approvals or Law.

1.5.2 Except as expressly set forth herein, DB Team acknowledges that GDOT neither represents nor warrants that the information contained in the RID is complete or accurate or that such information is in conformity with the requirements of the DB Documents, Governmental Approvals or Laws, and GDOT is not responsible or liable in any respect for any causes of action, claims or Losses whatsoever suffered by any DB Team-Related Entity by reason of any use of information contained in, or any action or forbearance in reliance on, the RID.

Article 2 GRANT OF AUTHORITY AND RIGHT OF WAY

2.1 Grant of Authority for Undertaking

2.1.1 GDOT hereby grants to DB Team the revocable right, and DB Team accepts the obligation, to design and construct (including any maintenance obligations during such period as required pursuant to the DB Documents) the Project in accordance with the requirements of this Agreement and the other DB Documents.

2.2 Right of Way; Construction Easement; Ownership

2.2.1 The Project shall be constructed on and within the property as identified in the NEPA Approval and any amendment thereto (the "Property"). GDOT shall be responsible to provide DB Team with access rights to the Property, together with the Existing Right of Way and Required Right of Way as set forth below.

2.2.1.1 Upon the terms and conditions of this Agreement, including as set forth in this Article 2.2, and subject to the terms and conditions of the DB Documents, as of the date of the Agreement or such other date as shall be mutually agreed upon in writing by GDOT and DB Team (the "Effective Date"), GDOT shall and does, subject to and upon issuance of the written notice to DB Team authorizing DB Team to proceed with the portion of the Work described in Article 3.3.1.1 ("NTP 1"):

(a) Grant to DB Team a non-exclusive right of access, ingress and egress to all real property comprising the Existing Right of Way as more particularly described and designated in Exhibit 4, subject to the exclusions and reservations set forth in this Agreement, in accordance with the terms described in the DB Documents, and

(b) as and to the extent that GDOT, has acquired a right of access or interest in any property as described and designated in Exhibit 4, grant a non-exclusive right of access, ingress and egress to the real property described therein.

2.2.1.2 GDOT and DB Team acknowledge and agree that GDOT is and shall remain throughout the Term the sole owner of fee title to the Property.

2.2.1.3 GDOT has reserved the right to enter upon, possess, control and utilize the Property with or without payment of compensation to DB Team.

2.2.1.4 GDOT has granted, and has further reserved the right to grant, to other parties utility and other permits and easements and modifications thereto and rights of use to the Property subject to the limitations of the DB Documents.

2.2.2 All Required Right of Way, as established in and designated within Exhibit 4, and Additional Properties , meaning those parcels or portions of property proposed by DB Team in addition to the Right of Way, including (if applicable) with respect to an accepted Alternative Technical Concept ("ATC") or otherwise contiguous to the Property and to be used for Project or in connection with the construction thereof, as expressly designated as "Additional Properties" within the Right of Way Acquisition Plan, other than temporary interests in property for Project Specific Locations, shall be acquired in the name of GDOT.

2.2.3 DB Team represents that it has reviewed the Existing Right of Way and Required Right of Way, together with the scheduled delivery dates for the Required Right of Way and confirmed that the access rights to the property and timing for the grant of such rights as identified therein are sufficient and complete so as to allow DB Team access to all areas of the Property as required for the performance and completion of the Work. DB Team shall give written notice to GDOT, setting forth with specificity the legal description of any Additional Properties, within ten (10) days of DB Team's determination of such need.

2.2.3.1 GDOT shall exercise the powers of condemnation when required to complete the acquisition of Additional Properties, including through the, subject to this Article 2.2.3, Section 7 of the Technical Provisions, and all applicable Laws relating to such acquisition, including the Federal Uniform Relocation Assistance and Real Property Acquisition Policies Act, P.L. 91-646, as amended (the "Uniform Act").

2.2.3.2 Except as provided in this Article 2.2.3, DB Team shall be responsible for all costs, expenses, and delays associated with acquiring all Additional Properties under this Agreement, including (a) the cost of acquisition services and document preparation, (b) the cost of condemnation proceedings required by the Office of the Georgia Attorney General, through jury trials and appeals, including attorneys' and expert witness fees, and all fees and expenses for exhibits, transcripts, photos and other documents and materials production, (c) the purchase prices, court awards or judgments, for all parcels required for the Project or the Work, (d) the cost of permanent or temporary acquisition of leases, easement and other interests in real property, including for drainage, temporary work space, lay down areas, material storage areas, earthwork borrow sites, and any other convenience of DB Team, (e) the cost of permitting, (f) closing costs associated with parcel purchases, in accordance with the Uniform Act and GDOT policies, and (g) relocation assistance payments and costs, in accordance with the Uniform Act. If GDOT incurs any such costs and expenses on DB Team's behalf, GDOT may submit any invoices for such costs and expenses to DB Team, in which case DB Team shall pay the invoices within thirty (30) days of DB Team's receipt of such invoices. As a condition precedent to GDOT exercising its condemnation powers and the Office of Georgia Attorney General initiating any condemnation proceedings with respect to a parcel, DB Team shall pay to GDOT the estimated amount of the costs of the condemnation proceedings, including the required monetary court deposit associated with such parcel and estimated attorneys' fees. If GDOT pays any such costs and expenses on DB Team's behalf, DB Team shall reimburse GDOT within thirty (30) days of DB Team's receipt of an invoice therefor. Other than excess amounts, if any, remaining after such condemnation proceedings, which shall be returned to DB Team, DB Team shall not be entitled to payment or reimbursement for any costs or expenses as set forth in this Article, nor shall such costs or expenses be included on account of any Compensation Event.

2.2.3.3 Except as otherwise authorized by Law for temporary Project Specific Locations, GDOT (a) shall not be obligated to exercise its power of eminent domain in connection with DB Team's acquisition of any such temporary right or interest, nor shall (b) have any obligations or responsibilities with respect to the acquisition, maintenance or disposition of such temporary rights or interests.

2.2.3.4 Except for GDOT's failure to deliver such portion of the Required Right of Way, exclusive of Additional Properties, as required pursuant to this Article 2.2, and solely to the extent (a) any such delay in delivery of access to any portion of the Required Right of Way (i) results in a GDOT-Caused Delay which constitutes a Relief Event, (ii) is as a result of

a GDOT Change, as described in Article 14, or (b) this Agreement expressly otherwise provides for a Relief Event and/or Compensation Event on account thereof, DB Team shall be solely responsible for all costs and delay associated therewith. Further, DB Team shall be solely responsible for all costs and delay associated with the acquisition of any Additional Properties.

Article 3 CONTRACT TIME

3.1 Term of Agreement

3.1.1 This Agreement shall remain in effect until Final Acceptance, subject to the survival of all such obligations as expressly provided herein, including without limitation, any warranty periods (the "Term"); provided that this Agreement shall be subject to earlier termination in accordance with the terms of this Agreement and the DB Documents.

3.2 Project Schedule

3.2.1 As a material consideration for entering into this Agreement, DB Team hereby commits, and GDOT is relying upon DB Team's commitment, to develop, design and fully construct the Project in accordance with the milestones and time periods set forth in this Agreement and the other DB Documents, including without limitation, in the Technical Provisions, the Project Schedule and Milestone Schedule Deadlines, subject only to delays caused by Relief Events specifically provided hereunder. The time limitations set forth for DB Team's performance of its covenants and obligations as required pursuant to the DB Documents, including without limitation performance of the Work as required pursuant to the Milestone Schedule Deadlines and Project Schedule, are of the essence, and except where this Agreement expressly provides for extension of time due to a Relief Event or allows delay subject to payment of Liquidated Damages or other compensation to GDOT, DB Team waives any right at law or in equity to tender or complete performance beyond the applicable time period, or to require GDOT to accept such performance. All references to days shall mean Calendar Days unless otherwise specified.

3.3 Contract Time, Date of Commencement, and Notice to Proceed

3.3.1 DB Team's time period for completion of the Work is the period from the Effective Date through the Maintenance Acceptance Date, as may be adjusted for any Relief Event as expressly provided in the Agreement (the "Contract Time"). All Work shall be performed in accordance with the Milestone Schedule attached as Exhibit 9, provided or updated from the Technical Proposal Prelimanary Schedule Submittal, as stated in Article 3.3.2.

3.3.1.1 GDOT anticipates issuing NTP 1 promptly following the Effective Date, and shall in any case provide for issuance of NTP 1 within thirty (30) days from DB Team's satisfaction of the conditions for contract execution. Issuance of NTP1 authorizes DB Team to commence preliminary design activities. Title 23, Code of Federal Regulations (CFR), Section 636.103 (23 CFR Section 636.103) defines preliminary design to include, but is not limited to preliminary engineering and other activities and analyses, such as topographic surveys, metes and bounds surveys, geotechnical investigations, hydrologic analysis, hydraulic analysis, utility engineering, traffic studies, financial plans, revenue estimates, hazardous materials assessments, general estimates of the types and quantities of materials, and other work needed to establish the parameters for the Final Design. Prior to completion of the National Environmental Protection Act (NEPA) review process, any such preliminary

engineering and other activities and analyses must not materially affect the objective consideration of alternatives in the NEPA review process. Preliminary design activities shall be completed in accordance Project Management Plan in accordance with the Technical Provisions and other activities anticipated to be performed after NTP1, including satisfying the conditions to issuance of NTP 3 under Article 3.3.1.3.

3.3.1.2 Issuance of NTP 2 authorizes the DB Team to perform Final Design activities. Title 23, CFR, Section 636.103 (23 CFR Section 636.103) defines Final Design as any design activities following preliminary design and expressly includes the preparation of final construction plans and detailed specifications for the performance of construction work. NTP 2 will be issued once the environmental document is approved, or with NTP 1 if the environmental document has been approved by the contract execution date.

3.3.1.3 Issuance of NTP 3, also referred to as Released for Construction ("RFC"), authorizes DB Team to perform all other Work and activities pertaining to the Project, subject to conforming RFC plans as may be related to commencement of any element of the Construction Work. DB Team may not proceed to commence any construction activity with respect to the Project except as authorized pursuant to an RFC. An RFC may be issued for the entire project or any Construction Phase of the project. GDOT anticipates issuing NTP 3 within five (5) days from DB Team's satisfaction of the following conditions:

(a) Submittal by DB Team to GDOT and GDOT's acceptance of the Project Management Plan in accordance with Article 9.1 of this Agreement and Section 2 of the Technical Provisions;

(b) Submittal by DB Team to GDOT and acceptance by GDOT of DB Team's Final Plans for the Project under Section 1.2 of the Technical Provisions;

(c) Submittal by DB Team to GDOT and acceptance by GDOT of DB Team's proposed Schedule of Values, and proposed Project Baseline Schedule under Section 2 of the Technical Provisions, together with any proposed revisions to the DB Contract Sum Payment Schedule;

(d) Submittal by DB Team to GDOT and acceptance by GDOT of the Traffic Control Plan and Transportation Management Plan;

(e) Submittal by DB Team to GDOT and acceptance by GDOT of the Public Information and Communications Plan (PICP) under Section 3.3.2.1 of the Technical Provisions, if required;

(f) Evidence by DB Team of all required Government Approvals as required under Article 6.2;

(g) Submittal by DB Team to GDOT and acceptance by GDOT of all Utility Agreements, Utility Encroachment Permits, Utliity Relocation Plans, and/or Certification of "No-Conflict", if required; and

(h) Submittal by DB Team to GDOT of qualified Worksite Utility Control Supervisor (WUCS), Worksite Erosion Control Supervisor (WECS), and Worksite Traffic Control Supervisor (WTCS).

3.3.1.4 Notwithstanding any provision to the contrary in this Article 3.3, DB Team shall not perform, nor be obligated to perform, any portion of the Work prior to issuance of the NEPA Approval, except for Work authorized under 23 CFR 636.109.

3.3.2 DB Team shall satisfy all conditions prior to issuance of NTP 3. DB Team shall satisfy all conditions to commencement of the Construction Work and commence such Construction Work with diligence and continuity, by the deadlines therefor set forth in Milestone Schedule attached as Exhibit 9, and any adjustments set forth therein, all as the same may be extended pursuant to this Agreement. If the Technical Proposal Schedule dates indicate completion of activities in advance of the dates listed in Milestone Schedule (Exhibit 9) as provided in the RFP, then Exhibit 9 shall be updated in the executed version of the contract to reflect the dates provided in the Technical Proposal.

3.3.3 DB Team shall achieve Substantial Completion on or before the Substantial Completion Deadline and Maintenance Acceptance on or before the Maintenance Acceptance Deadline, time being of the essence.

3.3.4 DB Team hereby represents and warrants that the Preliminary Baseline Schedule is in the form described in the Technical Provisions, has been developed in accordance with the Work Breakdown Structure requirements under Section 2 of the Technical Provisions, and is consistent with the Milestone Schedule. DB Team shall use the Preliminary Baseline Schedule as a foundation to prepare a proposed Project Baseline Schedule for GDOT's review and acceptance prior to issuance of NTP 2, as set forth in Section 2 of the Technical Provisions. The Parties shall use the Preliminary Baseline Schedule for planning and monitoring the progress of the Work until such time that the Project Baseline Schedule is accepted by GDOT. The proposed Project Baseline Schedule shall be consistent with the Preliminary Baseline Schedule and Milestone Schedule except to the extent for adjustments as provided in the DB Documents and as accepted by GDOT.

3.3.5 All Float contained in the Project Schedule shall be considered a shared resource among GDOT and DB Team, available to any or all such parties as needed to absorb delay caused to the critical path components as set forth in the Project Schedule or Milestone Schedule Deadlines, whether on account of Relief Events or other events of delay not constituting Relief Events. All Float shall be shown as such in the Project Schedule on each affected schedule path. GDOT shall have the right to examine the identification of (or failure to identify) Float on the Project Schedule in determining whether to accept the Project Schedule. Once identified, DB Team shall monitor and account for Float in accordance with critical path methodology.

3.3.6 DB Team shall deliver to GDOT, together with DB Team's submission of the proposed Project Baseline Schedule pursuant to Article 3.3.4, any proposed corresponding changes to the DB Contract Sum Payment Schedule.

Article 4 RESERVED

Article 5 DB CONTRACT SUM, PAYMENTS, AND PUBLIC FUNDS

5.1 Payment of DB Contract Sum

GDOT shall pay DB Team the DB Contract Sum on account of Work properly performed in accordance with the terms and conditions set forth in GDOT Standard Specififcations Section

109.03. DB Team, in consideration for all Work performed in accordance with the DB Documents, shall be entitled to receive the DB Contract Sum, which amount is inclusive of all fees, overhead, profit, insurance and bond premiums, labor and material costs, installations, delivery, warehouse and handling charges, duties, taxes and other assessments. DB Team's rights to receive payment of the DB Contract Sum, as compensation for Work performed, are set forth in GDOT Standard Specififcations Section 109.03. Except as otherwise expressly set forth in this Agreement, including without limitation Article 17.3.4 herein, GDOT shall not, for any reason, setoff, deduct or withhold from or against any amounts due or to become due by GDOT to DB Team hereunder any amounts due or owed to GDOT by DB Team and/or any Affiliate of DB Team under any contract or agreement between GDOT and any such party (other than the DB Documents).

5.2 GDOT Monetary Obligations and Overall Limitation of Liability

5.2.1 Notwithstanding anything to the contrary in the DB Documents, in no event shall GDOT's outstanding liability to DB Team under the DB Documents, including liability related to Compensation Events and Compensation Amounts, exceed the amount of compensation that would be payable to DB Team pursuant to a Termination for Convenience under Article 19.1.

Article 6 PROJECT PLANNING AND ACCEPTANCES; PROJECT ADMINISTRATION, REVIEW AND OVERSIGHT; PUBLIC INFORMATION

6.1 Preliminary Planning and Engineering Activities; Site Conditions

6.1.1 DB Team shall perform or cause to be performed all architectural and engineering activities appropriate for design and construction of the Project in accordance with Good Industry Practice and the DB Documents, which may inlucde, subject to the scope of Work set forth in the DB Documents or as required by GDOT by Supplemental Agreement or Directive Letter: (a) Utility Adjustments (b) technical studies and analyses; (c) geotechnical investigations; (d) right-of-way mapping, surveying and appraisals; (e) Subsurface Utility Engineering (SUE) investigations and mapping; (f) Hazardous Materials investigations; and (g) design and construction surveys.

6.1.2 Except to the extent that DB Team is entitled to a Relief Event and/or a Compensation Event under this Agreement, DB Team shall bear the risk of any incorrect or incomplete review, examination and investigation by it of the Site or the Existing Improvements and surrounding locations, and of any incorrect or incomplete information resulting from preliminary architectural and engineering activities conducted by DB Team, GDOT or any other Person. DB Team acknowledges and agrees that GDOT does not make any warranties or representations as to any surveys, data, reports or other information provided by GDOT or other Persons concerning surface conditions and subsurface conditions, including the presence of Utilities, Hazardous Materials, contaminated groundwater, archeological, paleontological and cultural resources, and Threatened or Endangered Species, affecting the Site, the Existing Improvements or surrounding locations. DB Team acknowledges that such information is for DB Team's reference only and has not been verified.

6.1.3 Except to the extent that DB Team is entitled to a Relief Event and/or a Compensation Event under this Agreement, DB Team shall bear the risk of all conditions occurring on, under or at the Site and the Existing Improvements, including (a) physical conditions of an unusual nature, differing materially from those ordinarily encountered in the

area, (b) changes in surface topography, (c) variations in subsurface moisture content, (d) Utility facilities, (e) the discovery at, near or on the Property of any archeological, paleontological or cultural resources, and (f) the discovery at, near or on the Property of any Threatened or Endangered Species.

6.2 Governmental Approvals and Third Party Agreements

6.2.1 GDOT has responsibility for obtaining all Governmental Approvals for the Project specifically listed in Section 4.2 of the Technical Provisions (including any such approvals as may be required from GDOT independent of GDOT's Project administration pursuant to Section 1.4 of the Agreement) ("Provided Approvals") based on the design schematic contained in the NEPA Approval. DB Team shall obtain all other Governmental Approvals and, except to the extent the DB Documents expressly provide GDOT is responsible therefor, all third party approvals and agreements required in connection with the Project or the Work, including any modifications, renewals and extensions of the Provided Approvals, including those required in connection with a Compensation Event. DB Team shall deliver to GDOT true and complete copies of all new or amended Governmental Approvals and third party approvals and agreements. In no event shall GDOT be responsible or liable for any delays in obtaining Provided Approvals to the extent such delays are caused by differences between the schematic contained in the NEPA Approvals and DB Team's Final Plans, unless such differences are due to a GDOT Change, as described in Article 14.

6.2.2 Prior to submitting to a Governmental Entity any application for a Governmental Approval (or any proposed modification, renewal, extension or waiver of a Governmental Approval or provision thereof), DB Team shall submit the same, together with any supporting environmental studies and analyses, to GDOT (a) for approval or (b) for review and comment, as specified in the Technical Provisions in Table 4-2.

6.2.3 Except as expressly set forth in this Agreement to the contrary, in the event DB Team's design differs from the schematic contained in the NEPA Approvals upon which the Provided Approvals were based, as among GDOT and DB Team, DB Team shall support necessary actions, and shall bear all risk of delay, resulting from or arising out of any associated change in the Project location and design, including (a) conducting all necessary environmental studies and preparing all necessary environmental documents in compliance with applicable Environmental Laws, and (b) obtaining and complying with all necessary new Governmental Approvals (including any modifications, renewals and extensions of the Provided Approvals, and other existing Governmental Approvals). GDOT and FHWA will independently evaluate all environmental studies and documents and fulfill the other responsibilities assigned to them by 23 CFR Part 771.

6.2.4 Subject to clauses (h), (i) and (n) of the definition of Compensation Event and clauses (o), (p) and (t) of the definition of Relief Event and except to the extent required under the Technical Requirements, in the event DB Team is unable to obtain necessary Governmental Approvals for any design that differs from the schematic contained in the NEPA Approvals upon which Provided Approvals were based, DB Team shall be obligated to design and construct the Project according to a design in compliance with the requirements of the Provided Approvals, and no such circumstance shall constitute a Relief Event, Compensation Event or other basis for any Claim.

6.2.5 At DB Team's request, GDOT shall reasonably assist and cooperate with DB Team in obtaining from Governmental Entities the Governmental Approvals (including any modifications, renewals and extensions of existing Governmental Approvals from Governmental Entities) required to be obtained by DB Team under the DB Documents.

6.2.6 DB Team shall comply with all conditions imposed by and undertake all actions required by and all actions necessary to maintain in full force and effect all Governmental Approvals, including performance of all environmental mitigation measures required by the DB Documents or Governmental Approvals, except to the extent that responsibility for performance of such measures is expressly assigned to GDOT in the DB Documents.

6.2.7 In the event that any Governmental Approvals required to be obtained by DB Team must formally be issued in GDOT's name, DB Team shall undertake necessary efforts to obtain such approvals subject to GDOT's reasonable cooperation with DB Team, as the case may be, at DB Team's expense (except in connection with a Compensation Event), in accordance with Article 6.2.5, including execution and delivery of appropriate applications and other documentation in form accepted by GDOT. Refer to Section 4.2 of the Technical Provisions for more specific provisions on applications in GDOT's name for Environmental Approvals.

6.2.8 In the event that GDOT or FHWA must act as the lead agency and directly coordinate with a Governmental Entity in connection with obtaining Governmental Approvals which are the responsibility of DB Team, DB Team shall provide all necessary support to facilitate the approval, mitigation or compliance process. Such support may include conducting necessary field investigations, surveys, and preparation of any required reports, documents and applications.

6.2.9 DB Team shall be responsible for compliance with all applicable Laws in relation to Project Specific Locations and for obtaining any Environmental Approval or other Governmental Approval required in connection with Project Specific Locations.

6.2.10 DB Team shall not enter into any agreement with any Governmental Entity, Utility Owner, railroad, property owner or other third party having regulatory jurisdiction over any aspect of the Project or Work or having any property interest affected by the Project or the Work that in any way purports to obligate GDOT, or the State or an agency or department thereof, or states or implies that GDOT has an obligation, to the third party to carry out any installation, design, construction, maintenance, repair, operation, control, supervision, regulation or other activity after the end of the Term, unless GDOT otherwise accepts in writing in its sole discretion. DB Team has no power or authority to enter into any such agreement with a third party in the name or on behalf of GDOT.

6.3 Review and Oversight

6.3.1 Submittal, Review and Acceptance Terms and Procedures

6.3.1.1 This Article 6.3 sets forth uniform terms and procedures that shall govern all Submittals pursuant to the DB Documents or Project Management Plan and component plans thereunder. In the event of any irreconcilable conflict between the provisions of this Article 6.3 and any other provisions of the DB Documents or Project Management Plan and component plans thereunder concerning submission, review and acceptance procedures,

this Article 6.3 shall exclusively govern and control, except to the extent that the conflicting provision expressly states that it supersedes this Article 6.3.

6.3.2 Time Periods

6.3.2.1 Except as expressly set forth in Section 23 of the Technical Provisions or as provided below, whenever GDOT is entitled to review and comment or accept a Submittal, GDOT shall promptly respond and/or act upon such Submittal within thirty (30) days from the date it receives an accurate and complete Submittal, together with a completed transmittal form in form to be mutually agreed and all necessary information and documentation concerning the subject matter. Any period of review by GDOT in excess of thirty (30) days, except where Section 23 of the Technical Provisions provides for a longer time period, shall be deemed a GDOT Caused-Delay and give rise to Relief Event. The time periods set forth in the DB Documents for GDOT's review and acceptance of Submittals, as and to the extent required shall apply to and restart with all re-Submittals which DB Team may be required to provide.

6.3.2.2 Reserved.

6.3.2.3 The time periods set forth herein with respect to GDOT's review and acceptance or comment on Submittals shall be subject to adjustment as provided in Section 23 of the Technical Provisions for multiple concurrent Submittals.

6.3.2.4 All time periods for GDOT to act upon Submittals shall be extended by the period of any delay caused by any Relief Event impacting same, including as set forth in clauses (a), (b), (c), (m) and (n) of the definition of Relief Event or otherwise as and to the extent of any delay of DB Team or any DB Team-Related Entity.

6.3.2.5 During any time that GDOT is entitled under Article 17.3.8 to increase the level of its auditing, monitoring, inspection, sampling, measuring, testing and oversight of the Project, the Utility Adjustments and DB Team's compliance with its obligations under the DB Documents, the applicable period for GDOT to act on any Submittals received during such time and not related to curing the DB Team Default(s) that instigated the Article 17.3.8 action shall automatically be extended by fourteen (14) days.

6.3.2.6 GDOT shall endeavor to reasonably accommodate a written request from DB Team for expedited action on a specific Submittal, within the practical limitations on availability of personnel appropriate for acting on the types of Submittal in question; provided DB Team sets forth in its request specific, abnormal circumstances demonstrating the need for expedited action. This provision shall not apply, however, during any time described in Article 6.3.2.4 or 6.3.2.5.

6.3.3 GDOT Discretionary Acceptances

If the Submittal is one where the DB Documents indicate consent or acceptance is required from GDOT in its sole discretion, absolute discretion, unfettered discretion or good faith discretion, then GDOT's lack of acceptance, determination, decision or other action within the applicable time period under Article 6.3.2 shall be deemed disapproval.

6.3.4 Other GDOT Acceptances

6.3.4.1 Whenever the DB Documents indicate that a Submittal or other matter is subject to GDOT's acceptance or consent and no particular standard therefor is stated, then the standard shall be reasonableness.

6.3.4.2 If the reasonableness standard applies to GDOT's right of acceptance of or consent to a Submittal, and GDOT delivers no acceptance, consent, determination, decision or other action within the applicable time period under Article 6.3.2, then DB Team may deliver to GDOT a written notice stating the date within which GDOT was to have decided or acted and that if GDOT does not decide or act within five (5) Business Days after receipt of the notice, delay from and after that date (five (5) Business Days after receipt of the notice) may constitute GDOT-Caused Delay for which DB Team may be entitled to issue a Relief Event Notice and Compensation Event Notice under Articles 13.1 and 13.2.

6.3.5 GDOT Review and Comment

Whenever the DB Documents indicate that a Submittal or other matter is subject to GDOT's review, comment, review and comment, disapproval or similar action not entailing a prior acceptance and GDOT delivers no comments, exceptions, objections, rejections or disapprovals within the applicable time period under Article 6.3.2, then DB Team may proceed thereafter at its election and risk, without prejudice to GDOT's rights to later object or disapprove in accordance with Article 6.3.7.1. No such failure or delay by GDOT in delivering comments, exceptions, objections, rejections or disapprovals within the applicable time period under Article 6.3.2 shall constitute a Relief Event, Compensation Event or other basis for any Claim. When used in the DB Documents, the phrase "completion of the review and comment process" or similar terminology means either (a) GDOT has reviewed, provided comments, exceptions, objections, rejections or disapprovals, and all the same have been resolved, or (b) the applicable time period has passed without GDOT providing any comments, exceptions, objections, rejections or disapprovals.

6.3.6 Submittals Not Subject to Prior Review, Comment or Acceptance

Whenever the DB Documents indicate that DB Team is to deliver a Submittal to GDOT but express no requirement for GDOT review, comment, disapproval, prior acceptance or other GDOT action, then DB Team is under no obligation to provide GDOT any period of time to review the Submittal or obtain acceptance of it before proceeding with further Work, and GDOT shall have the right, but is not obligated, to at any time review, comment on, take exception to, object to, reject or disapprove the Submittal in accordance with Article 6.3.7.1. No failure or delay by GDOT in delivering comments, exceptions, objections, rejections or disapprovals with respect to any Submittal as set forth in this Article shall constitute a Relief Event, Compensation Event or other basis for any Claim.

6.3.7 Resolution of GDOT Comments and Objections

6.3.7.1 If the Submittal is one not governed by Article 6.3.3, GDOT's exception, objection, rejection or disapproval shall be deemed reasonable, valid and binding if based on any of the following grounds:

(a) The Submittal or subject provision thereof fails to comply with any applicable covenant, condition, requirement, term or provision of the DB Documents or Project Management Plan and component plans thereunder;

(b) The Submittal or subject provision thereof is not to a standard equal to or better than the requirements of Good Industry Practice;

(c) DB Team has not provided all content or information required in respect of the Submittal or subject provisions thereof, provided that GDOT assumes no duty, obligation or liability regarding completeness or correctness of any Submittal, including a Submittal that is to be delivered to a Governmental Entity as a proposed Governmental Approval, or in order to obtain, modify, amend, supplement, renew, extend, waive or carry out a Governmental Approval;

(d) Adoption of the Submittal or subject provision thereof, or of any proposed course of action thereunder, would result in a conflict with or violation of any Law or Governmental Approval; or

(e) In the case of a Submittal that is to be delivered to a Governmental Entity as a proposed Governmental Approval, or in order to obtain, modify, amend, supplement, renew, extend, waive or carry out a Governmental Approval, it proposes commitments, requirements, actions, terms or conditions that are not arrangements that GDOT offers or accepts for addressing similar circumstances affecting its own projects.

6.3.7.2 DB Team shall timely and promptly respond to all of GDOT's comments and objections to a Submittal and, except as provided below, make modifications to the Submittal as necessary to fully reflect and resolve all such comments and objections, in accordance with the review processes set forth in this Article 6.3. DB Team acknowledges that GDOT may provide comments and objections which reflect concerns regarding interpretation or preferences of the commenter or which otherwise do not directly relate to grounds set forth in Article 6.3.7.1. DB Team agrees to undertake reasonable efforts to accommodate or otherwise resolve any such comments or objections through the review processes described in this Article 6.3. However, if the Submittal is not governed by Article 6.3.3, the foregoing shall in no way be deemed to obligate DB Team to incorporate any comments or resolve objections that are not on any of the grounds set forth in Article 6.3.7.1 and would result in a delay to a Critical Path on the Project Schedule, or an increase in DB Team's costs, except pursuant to a GDOT Change as described in Article 14. If, however, DB Team does not accommodate or otherwise resolve any comment or objection, DB Team shall deliver to GDOT within a reasonable time period, not to exceed fourteen (14) days after receipt of GDOT's comments or objections, a written explanation why modifications based on such comment or objection are not required. The explanation shall include the facts, analyses and reasons that support the conclusion.

6.3.7.3 The foregoing shall in no way be deemed to obligate DB Team to incorporate any comments or resolve objections that would render the Submittal erroneous, defective or less than Good Industry Practice, except pursuant to a GDOT Change.

6.3.7.4 If DB Team fails to notify GDOT within such time period, GDOT may deliver to DB Team a written notice stating the date by which DB Team was to have addressed GDOT's comments and that if DB Team does not address those comments within five (5) Business Days after receipt of this notice, then that failure shall constitute DB Team's agreement to make all changes necessary to accommodate and resolve the comment or objection and full acceptance of all responsibility for such changes without right to a Relief Event, Compensation Event or other Claim.

6.3.7.5 After GDOT receives DB Team's explanation as to why the modifications are not required as provided in Articles 6.3.7.2, 6.3.7.3 and 6.3.7.4, the Parties shall attempt in good faith to resolve the dispute. If they are unable to resolve the dispute, it shall be resolved according to GDOT Standard Specification 105.13 "Claims for Adjustments and Disputes" except (a) as provided otherwise in Article 6.3.3, and (b) if GDOT elects to issue a Directive Letter pursuant to Article 14.3 with respect to the disputed matter, the DB Team shall proceed in accordance with GDOT's directive while retaining any Claim as to the disputed matter.

6.3.8 Limitations on DB Team's Right to Rely

6.3.8.1 No review, comment, objection, rejection, acceptance, disapproval, acceptance, certification (including certificates of Substantial Completion and Maintenance Acceptance), concurrence, monitoring, testing, inspection, spot checking, auditing or other oversight by or on behalf of GDOT or their representatives or agents, and no lack thereof by GDOT, or their representatives or agents, shall constitute acceptance of materials or Work or waiver of any legal or equitable right under the DB Documents, at Law, or in equity. GDOT shall be entitled to remedies for Nonconforming Work and to identify additional Work which must be done to bring the Work and Project into compliance with requirements of the DB Documents, regardless of whether previous review, comment, objection, rejection, acceptance, disapproval, acceptance, certification, concurrence, monitoring, testing, inspection, spot checking, auditing or other oversight were conducted or given by GDOT, or their representatives or agents. Regardless of any such activity or failure to conduct any such activity by GDOT, or their representatives or agents, DB Team at all times shall have an independent duty and obligation to fulfill the requirements of the DB Documents. DB Team agrees and acknowledges that any such activity or failure to conduct any such activity by GDOT, or their representatives or agents:

(a) is solely for the benefit and protection of GDOT;

(b) does not relieve DB Team of its responsibility for the selection and the competent performance of all DB Team-Related Entities;

(c) does not create or impose upon GDOT any duty or obligation toward DB Team to cause it to fulfill the requirements of the DB Documents;

(d) shall not be deemed or construed as any kind of warranty, express or implied, by GDOT;

(e) may not be relied upon by DB Team or used as evidence in determining whether DB Team has fulfilled the requirements of the DB Documents; and

(f) may not be asserted by DB Team against GDOT as a defense, legal or equitable, to, or as a waiver of or relief from, DB Team's obligation to fulfill the requirements of the DB Documents.

6.3.8.2 DB Team shall not be relieved or entitled to reduction of its obligations to perform the Work in accordance with the DB Documents, or any of its other liabilities and obligations, including its indemnity obligations, as the result of any activity identified in Article 6.3.8.1 or failure to conduct any such activity by GDOT. Such activity by GDOT shall not relieve DB Team from liability for, and responsibility to cure and correct Nonconforming Work or DB Team Defaults.

6.3.8.3 To the maximum extent permitted by Law, DB Team hereby releases and discharges GDOT from any and all duty and obligation to cause DB Team's Work or the Project to satisfy the standards and requirements of the DB Documents.

6.3.8.4 Notwithstanding the provisions of Articles 6.3.8.1, 6.3.8.2 and 6.3.8.3:

(a) DB Team shall be entitled to rely on written approvals, acceptances, lack of responses from GDOT (i) for the limited purpose of establishing that the approval, acceptance or lack of response occurred or (ii) that are within its sole discretion, but only to the extent that DB Team is prejudiced by a subsequent decision of such party to rescind such approval or acceptance;

(b) Reserved

(c) DB Team shall be entitled to rely on the certificates of Substantial Completion and Maintenance Acceptance from GDOT for the limited purpose of establishing that Substantial Completion and Maintenance Acceptance, as applicable, have occurred, and the respective dates thereof;

(d) GDOT is not relieved from any liability arising out of a knowing and intentional material misrepresentation under any written statement GDOT delivers to DB Team; and

(e) GDOT is not is relieved from performance of its express responsibilities under the DB Documents in accordance with all standards applicable thereto.

6.3.9 Inspection and Testing; Limitations

6.3.9.1 At all times during the term of this Agreement, GDOT shall have the right to conduct the monitoring, reviewing, inspection, testing, reporting, auditing and other oversight functions set forth in the DB Documents, including without limitation:

(a) monitoring and auditing DB Team and its books and records to determine compliance with requirements of the DB Documents and the accepted Project Management Plan, including audit review of Design Documents, Plans, Construction Documents and other Submittals;

(b) conducting field monitoring and inspections on an audit basis as indicated in the DB Documents, including in connection with GDOT's certifications of Substantial Completion and Maintenance Acceptance;

(c) develop quality reports, regular audit reports, reports on Defects, other reports, and findings, opinions, evaluations, comments, objections and recommendations, all as more particularly set forth in the DB Documents;

(d) reviewing and commenting on all Submittals for which GDOT review and comment or acceptance is required under the DB Documents, unless expressly provided otherwise in the DB Documents, or unless waived in writing by the Parties for a specific Submittal or type of Submittal;

(e) attending and witnessing DB Team's tests and inspections;

(f) auditing the books and records of Key Contractors to confirm compliance with the DB Documents and applicable Law;

(g) investigating, analyzing and reporting on Safety Compliance and performance of Safety Compliance Orders; and

(h) reviewing, commenting on and giving recommendations, objections or disapprovals regarding the Project Payment Request and revisions thereto, and processing such Project Payment Request.

6.3.9.2 GDOT shall have the right to attend and witness any tests and verifications to be conducted pursuant to the Technical Provisions and applicable Management Plans. DB Team shall provide to GDOT all applicable test results and reports (which may be provided in electronic format in accordance with the Technical Provisions) within ten (10) days after DB Team receives them.

6.3.10 Oversight by GDOT for FHWA and Federal Compliance

6.3.10.1 In addition to GDOT's rights of oversight, inspection, monitoring and auditing of DB Team's Work, GDOT shall independently have the right at all times to monitor, inspect, sample, measure, attend, observe or conduct tests and investigations, and conduct any other oversight respecting any part or aspect of the Project or the Work, to the extent necessary or advisable (a) to comply with FHWA, U.S. Army Corps of Engineers or other applicable federal agency requirements, and (b) to verify on an audit basis DB Team's compliance with the DB Documents and Project Management Plan as provided in Article 22.2.

6.3.10.2 DB Team acknowledges and agrees that GDOT will have the right to audit, monitor and inspect DB Team and its Contractors compliance with Good Industry Practice and its responsibilities and obligations under the DB Documents.

6.3.10.3 GDOT will not conduct formal prior reviews of Design Documents except to the extent necessary or advisable to comply with FHWA, U.S. Army Corps of Engineers or other applicable federal agency requirements, provided that the aforementioned shall not limit GDOT rights pursuant to this Agreement. GDOT reserves the right to conduct "over-the-shoulder" reviews of Design Documents or other Submittals as they may deem necessary or appropriate, including pursuant to Article 17.3.8, provided that they shall not have any obligation to conduct such reviews nor assume any responsibility for DB Team's Work, regardless of whether or not electing to perform or performing any such reviews.

6.3.10.4 Nothing in the DB Documents shall preclude, and DB Team shall not interfere with, any review, audit or oversight of Submittals, Work or books and records that the FHWA may desire to conduct.

6.3.11 Rights of Cooperation and Access; Increased Oversight

6.3.11.1 DB Team shall coordinate and cooperate, and require its Contractors to coordinate and cooperate, with GDOT and any such parties as provided in Article 6.3 to facilitate the full, efficient, effective and timely performance of all such monitoring, inspection, sampling, measuring, testing, reporting, auditing, and other oversight functions. DB Team shall cause its representatives to be available at all reasonable times for consultation with GDOT and such other parties as required.

6.3.11.2 Without limiting the foregoing, DB Team shall afford GDOT (a) safe and unrestricted access to the Project at all times, (b) safe access during normal business hours to DB Team's Project offices and operations buildings and (c) unrestricted access to data respecting the Project design, construction, operations and maintenance, and the Utility Adjustment Work. Without limiting the foregoing, DB Team shall deliver to GDOT upon request accurate and complete books, records, data and information regarding Work, the Project and the Utility Adjustment Work, in the format required by the Technical Provisions.

6.3.11.3 GDOT shall have the right to increase the type and level of their oversight as provided in Article 6.3

6.3.12 Limits of Responsibility For Oversight, Review, Recommendations, Inspection and Acts by GDOT

6.3.12.1 Although GDOT, and its representatives and agents may consult with DB Team during the course of the Work, no such party shall have control over, charge of, or responsibility for the any of the Work, including without limitation, any design or engineering thereof, or means, methods, techniques, sequences or procedures in connection therewith, nor shall any such party be responsible for DB Team's failure to perform the Work in accordance with the requirements of the DB Documents. Any such review is not for the purpose of determining the accuracy and completeness of information or work product, all of which are DB Team's responsibility. Any review, recommendation, acceptance, inspection, response, act or omission with respect to any Submittals, or with respect to the Project, the Work (whether Construction Work or Design Work), or the Construction Documents shall be pursuant to, and solely in furtherance of the inspection powers as set forth in O.C.G.A. § 50-21-24(8). DB Team shall, at all times and notwithstanding any such acts or omissions by GDOT as provided in this Article 6 or elsewhere in this Agreement, be fully responsible for all architectural design and engineering required for the Project. DB Team expressly waives and releases (a) all claims for right of contribution against either GDOT or their respective representatives and agents, other than for such parties' sole negligence, arising from or related to any third party claims, including without limitation for personal injury, death, or property damage, and (b) all claims and defenses by DB Team against GDOT, or their respective representatives and agents in derogation of the limitations of this Article 6, including this Article 6.3.12, and/or that any or all of such parties otherwise have, or by their acts or omissions, assumed any responsibility for, or related to, the design or construction of the Project, or any means, methods, or techniques in respect thereof. DB Team hereby further expressly waives any claim or defense the basis of which is to assert that GDOT may not delegate the responsibility for any element of the design and construction of the Project involving public roadways, signs, or traffic controls to DB Team as provided in this Agreement.

6.4 Community Outreach and Public Information

DB Team shall provide on-going information to the public concerning the development of the Project, in accordance with the Public Information and Communications Plan prepared by DB Team pursuant to Section 3 of the Technical Provisions, if applicable.

Article 7 DEVELOPMENT OF THE PROJECT

7.1 General Obligations of DB Team

DB Team, in addition to performing all other requirements of the DB Documents, shall:

7.1.1 Furnish all design, engineering and other services, provide construction management and all work, including all materials, equipment, labor, and installations, and undertake all efforts necessary or appropriate (excluding only those materials, services and efforts which the DB Documents expressly specify will be undertaken by GDOT or other Persons) to construct the Project and maintain it during construction, so as to achieve Substantial Completion and Maintenance Acceptance by the applicable Milestone Schedule Deadlines;

7.1.2 At all times provide a Project Manager approved by GDOT who (a) will have full responsibility for the prosecution of the Work, including Design Work and Construction Work, (b) will act as agent and be a single point of contact in all matters on behalf of DB Team, (c) will be present (or his/her designee approved by GDOT will be present) at the Site at all times that Design Work or Construction Work is performed, and (d) will be available to respond to GDOT;

7.1.3 Comply with, and require that all Contractors comply with, all requirements of all applicable Laws;

7.1.4 Cooperate with GDOT, and Governmental Entities with jurisdiction in all matters relating to the applicable portions of the Work, including Design Work and Construction Work for the Project, including their review, inspection and oversight of the design and construction; and

7.1.5 Use commercially reasonable efforts to mitigate delay to design and construction of the Project and mitigate damages due to delay in all circumstances, to the extent possible, including by re-sequencing, reallocating, or redeploying DB Team's and its Contractors' forces to other work, as appropriate.

7.2 Performance, Design and Construction Standards

7.2.1 DB Team shall furnish all aspects of the Design Work and all Design Documents, and shall construct the Project and perform the Construction Work as designed, free from Defects, and in accordance with (a) Good Industry Practice, (b) the requirements, terms and conditions set forth in the DB Documents, (c) the Project Schedule, (d) all Laws, (e) the requirements, terms and conditions set forth in all Governmental Approvals, (f) the requirements of the accepted Quality Management Plan, and (g) the accepted Project Management Plan and all component plans prepared or to be prepared thereunder, in each case taking into account the Existing Right of Way, Required Right of Way, and any Additional Property limits and other constraints affecting the Project and the Property.

7.2.2 Reserved.

7.2.3 DB Team acknowledges that prior to the Effective Date it had the opportunity to identify any provisions of the Technical Provisions or Technical Documents that are erroneous or create a potentially unsafe condition, and the opportunity and duty to notify GDOT in writing of such fact and of the changes to the provision that DB Team believed were the minimum necessary to render it correct and safe. If it is reasonable or necessary to adopt changes to the Technical Provisions or Technical Documents after the Effective Date to make the provisions correct and safe, such changes shall not be grounds for a Relief Event or Compensation Event unless (a) DB Team neither knew nor had reason to know prior to the Effective Date that the provision was erroneous or created a potentially unsafe condition or (b) DB Team knew of and

reported to GDOT the erroneous or potentially unsafe provision prior to the Effective Date and GDOT did not adopt reasonable and necessary changes. Except for a circumstance as set forth under (b) herein, if DB Team commences or continues any Design Work or Construction Work affected by such a change after the need for the change was discovered or suspected, or should have been discovered or suspected through the exercise of reasonable care, DB Team shall bear any additional costs associated with redoing the Work already performed. Inconsistent or conflicting provisions of the DB Documents shall not be treated as erroneous provisions under this Article 7.2.3, but instead shall be governed by Article 1.2.

7.2.4 References in the Technical Provisions or Technical Documents to manuals or other publications governing the Design Work or Construction Work prior to the Substantial Completion Date shall mean the most recent editions in effect at the date of the RFP advertisement, unless expressly provided otherwise. Any changes to the Technical Provisions and Technical Documents, including Safety Standards, respecting Design Work or Construction Work prior to the Substantial Completion Date shall be subject to the Supplemental Agreement process for a GDOT Change in accordance with Article 14. Safety Compliance changes shall be in accordance with Article 12.1.

7.2.5 The Parties anticipate that from time to time after the Effective Date, GDOT will adopt, through revisions to existing manuals and publications or new manuals and publications, changed, added or replacement standards, criteria, requirements, conditions, procedures, specifications and other provisions, including Safety Standards, relating to Design Work and Construction Work. GDOT shall have the right to add such changed, added or replacement standards, criteria, requirements, conditions, procedures, specifications and other provisions, including Safety Standards, to Volume 3 by notice to DB Team, whereupon they shall constitute amendments, and become part, of the Technical Documents. If such changed, added or replacement Technical Documents or Safety Standards encompass matters that are addressed in the Technical Provisions or Technical Documents as of the Effective Date, they may, upon inclusion in Volume 3, replace and supersede inconsistent provisions of the Technical Provisions and Technical Documents to the extent designated by GDOT in its sole discretion. GDOT will identify the superseded provisions in its notice to DB Team. Notwithstanding the foregoing, in the absence of a GDOT Change and except as provided otherwise in Article 7.5.3 with respect to Adjustment Standards, if GDOT adopts the changed, added or replacement standards, criteria, requirements, conditions, procedures, specifications and other provisions, including changed, added or replacement Safety Standards, prior to the Maintenance Acceptance Date, DB Team shall not be obligated to (but may) incorporate the same into its design and construction of the Project prior to the Maintenance Acceptance Date.

7.3 Design Implementation and Submittals

7.3.1 DB Team, through the appropriately qualified and licensed design professionals identified in DB Team's Project Management Plan in accordance with Section 2 of the Technical Provisions, shall prepare designs, plans and specifications in accordance with the DB Documents. DB Team shall cause the engineer of record for the Project to sign and seal all Released for Construction Documents.

7.3.2 DB Team shall deliver to GDOT accurate and complete duplicates of all Interim Design, and Preliminary and Final Plans and Construction Documents within the time and in the form required by the Technical Provisions.

7.4 Reserved.

7.5 Utility Adjustments

7.5.1 DB Team's Responsibility

7.5.1.1 DB Team is responsible for causing, in accordance with the Project Schedule, all Utility Adjustments necessary to accommodate construction, operation, maintenance and/or use of the Project. DB Team shall coordinate, monitor, and otherwise undertake the necessary efforts to cause Utility Owners performing Utility Adjustment Work to perform such work timely, in coordination with the Work, and in compliance with the standards of design and construction and other applicable requirements specified in the Design-Build Contract Documents.

7.5.1.2 In addition to GDOT's Project administration, GDOT shall independently have the right at all times with respect to acceptance of Utility Adjustments as provided herein. DB Team shall coordinate and be required to procure GDOT acceptance as required.

7.5.1.3 Regardless of the arrangements made with the Utility Owners, the DB Team shall continue to be the responsible party to GDOT for timely performance of all Utility Adjustment Work so that upon completion of the Work, all Utilities that might impact the Project or be impacted by it (whether located within or outside the Construction Maintenance Limits) are compatible with the Project. GDOT will provide to DB Team the benefit of any provisions in recorded utility or other easements affecting the Project which require the easement holders to relocate at their own expense (unless specified otherwise in the Technical Provisions or a Utility Agreement), subject, however, to any provisions of applicable Law affecting the easement holder's obligations for Utility Adjustments.

7.5.2 Utility Agreements

7.5.2.1 The DB Team will be responsible for completion of all required Utility Agreements. The DB Team will work with the State Utilities Preconstruction Engineer, or assigned designee, to acquire the appropriate Agreement template and coordinate the completion of all required Utility Agreements with Utility Owners. Upon completion of the Utility Agreement with the Utility Owner, the signed agreement should be forwarded to the District Utilities Engineer for review and acceptance. Upon the acceptance by the District, the Utility Agreement shall be forwarded to the State Utilities Preconstruction Engineer for processing and final acceptance. As described in the GDOT Utility Accommodation Policy and Standards Manual ("UAM"), Chapter 4.2.F Agreements cover all requirements for Utility Agreements

7.5.3 Requirements

Each Utility Adjustment (whether performed by DB Team, Sub-Contractor or by the Utility Owner) shall comply with the Adjustment Standards in effect as of the date of advertisement of the contract, together with any subsequent amendments and additions to those standards that (a) are necessary to conform to applicable Law, or (b) are adopted by the Utility Owner and affect the Utility Adjustment pursuant to the applicable Utility Agreement(s). In addition, all Utility Adjustment Work shall comply with all applicable Laws, the applicable Utility Agreement(s), and all other requirements specified in Section 6 of the Technical Provisions.

7.5.4 Failure of Utility Owners to Cooperate/Escalation

7.5.4.1 DB Team shall use diligent efforts to obtain the cooperation of each Utility Owner as necessary for Utility Adjustments. It shall be the DB Team's responsibility to coordinate and track each utilities progress in relation to the Utility Work Plan or Revised Utility Work Plan previously accepted by the Department. Once the DB Team has determined that the Utilities work progress is at least 20% behind the accepted Utility Work Plan; the DB Team will notify the Utility Owner, and the Department of such apparent delay through written correspondence. Such written correspondence shall detail the delay in question and request the Utility to submit a proposal on how the Utility Owner plans to rectify such delay and maintain the project's schedule prescribed by the previously accepted Utility Work Plan. The Utility will respond to this letter within ten (10) business days. The response shall include a proposal to cure the delay identified by the DB Team. In some cases, the complexity of the project may require that a utility coordination meeting be held to address the issues identified by the DB Team. If the Utility determines that this is the case, then the Utilities response letter shall include a request to hold a utility coordination meeting with the DB Team, the District Utility Engineer and the District Construction Engineer for utility delay resolution. If the utility delay cannot be resolved through the coordination efforts described above after twenty (20) Business Days from the date provided in the DB Team's original written correspondence; the said dispute shall escalate to the State Construction Engineer for further consideration. If additional escalation is required, please follow escalation procedures as outlined in the UAM.

7.5.5 Utility Permits (GUPS)

7.5.5.1 It is anticipated that during the design and construction phases of the Work, from time to time Utility Owners will apply for utility permits to install new Utilities that would cross or longitudinally occupy the Property, or to modify, upgrade, repair, relocate or expand existing Utilities within the Property for reasons other than accommodation of the Project.

7.5.5.2 For all such utility permit applications pending as of or submitted after the Effective Date, DB Team shall furnish the most recent Project design information and/or as-built plans, as applicable, to the applicants, and shall assist each applicant with information regarding the location of other proposed and existing Utilities. DB Team shall keep records of its costs related to new Utilities separate from other costs.For all such utility permit applications pending as of or submitted after the Effective Date, DB Team shall furnish the most recent Project design information and/or as-built plans, as applicable, to the applicants, and shall assist each applicant with information regarding the location of other proposed and existing Utilities. DB Team shall keep records of its costs related to new Utilities separate from other costs.

7.5.6 Reserved.

7.5.7 Early Adjustments

7.5.7.1 If any Adjustments are designated as Early Adjustments in Section 6 of the Technical Provisions, such Adjustments are anticipated to be completed by prior to the deadline therefore set forth in the Technical Provisions. DB Team's obligation to provide Protection in Place for Utilities includes any Early Adjustments, whether or not timely completed. DB Team shall coordinate with GDOT and the Utility Owner as may be necessary for orderly

completion of any Early Adjustments, and DB Team shall conduct its Work without interfering with or hindering the progress or completion of any Early Adjustments.

7.6 Conditions to Commencement of Construction Work

7.6.1 Construction Work Generally

Except to the extent expressly permitted in writing by GDOT, DB Team shall not commence or permit or suffer commencement of construction of the Project, or applicable portion thereof, until GDOT issues NTP 3 and all of the conditions of Article 3.3.1.3 have been met.

7.6.2 Utility Adjustments

DB Team shall not commence or permit or suffer commencement of construction of a Utility Adjustment included in the Construction Work until GDOT issues NTP 3, and the requirements of Article 7.5 have been met.

7.7 Substantial Completion, Punch List, Maintenance Acceptance

7.7.1 Substantial Completion

7.7.1.1 GDOT will issue a written certificate of Substantial Completion at such time as Substantial Completion occurs which shall be subject to the terms and conditions of this Article 7.7.1.

7.7.1.2 Substantial Completion shall occur upon satisfactory completion of the requirements of GDOT Standard Specification 108.07.G.

7.7.1.3 Reserved

7.7.1.4 DB Team shall provide GDOT with not less than twenty (20) days prior written notification of the date DB Team determines it will achieve Substantial Completion. During such notice period, DB Team and GDOT shall meet and confer and exchange information on a regular cooperative basis with the goal being GDOT's orderly, timely inspection and review of the Project and the applicable Final Plans and Construction Documents, and GDOT's issuance of a written certificate of Substantial Completion.

7.7.1.5 During the period specified in Article 7.7.1.4, GDOT shall conduct an inspection of the Project and its components, a review of the applicable Final Plans and Construction Documents and such other investigation as may be necessary to evaluate whether Substantial Completion is achieved. GDOT shall deliver a written report of findings and recommendations to the DB Team following such inspection, review and investigation and within five (5) days after the end of the period specified in Article 7.7.1.4. GDOT shall then either (a) issue the written certificate of Substantial Completion or (b) notify DB Team in writing setting forth, as applicable, why the Project has not reached Substantial Completion. If GDOT and DB Team cannot agree as to the date of Substantial Completion, such Dispute shall be resolved according to GDOT Standard Specification 105.13 "Claims for Adjustments and Disputes."

7.7.2 Punch List

7.7.2.1 GDOT will prepare and the DB Team shall maintain the Punch List. Each participant shall have the right to add items to the Punch List and none shall remove any item added by any other without such other's express permission. If DB Team objects to the addition of an item by GDOT, the item shall be noted as included under protest, and if the Parties thereafter are unable to reconcile the protest, the Dispute shall be resolved according to GDOT Standard Specification 105.13 "Claims for Adjustments and Disputes." DB Team shall deliver to GDOT a true and complete copy of the Punch List, and each modification thereto, as soon as it is prepared.

7.7.2.2 DB Team shall immediately commence work on the Punch List items and diligently prosecute such work to completion, consistent with the DB Documents, prior to issuance of maintenance acceptance.

7.7.3 Maintenance Acceptance

7.7.3.1 Promptly after achieving Substantial Completion, DB Team shall perform all remaining Construction Work for the Project, including completion of all Punch List items, all landscaping other than vegetative ground cover and aesthetic features. DB Team shall prepare and adhere to a timetable for planting and establishing the vegetative ground cover landscaping, taking into account weather conditions necessary for successful planting and growth, which timetable shall in any event provide for vegetative ground cover landscaping to be planted and established by twelve (12) months after Substantial Completion.

7.7.3.2 GDOT will issue a written certificate of Maintenance Acceptance at such time as all of the following have occurred for the Project:

(a) All requirements for Substantial Completion have been satisfied;

(b) All Punch List items have been completed and delivered to the reasonable satisfaction of GDOT;

(c) All aesthetic and landscaping features (other than vegetative ground cover landscaping) have been completed in accordance with Section 15 of the Technical Provisions, as applicable, and the plans and designs prepared in accordance therewith;

(d) GDOT has received a complete set of the Record Drawings in form and content required by Sections 2.3.17 and 23.6 of the Technical Provisions;

(e) All Utility Adjustment Work and other work that DB Team is obligated to perform for or on behalf of third parties has been accepted by such third parties, and DB Team has paid for all work by third parties that DB Team is obligated to pay for, other than disputed amounts;

(f) DB Team has paid in full all Liquidated Damages that are due to GDOT pursuant to this Agreement and are not in Dispute, and has provided to GDOT reasonable security for the full amount of Liquidated Damages that may then be the subject of an unresolved Dispute;

(g) There exist no uncured DB Team Defaults that are the subject of a Warning Notice, or with the giving of notice or passage of time, or both, could become the

subject of a Warning Notice (except any DB Team Default for which Maintenance Acceptance will affect its cure);

(h) All component parts, plans and documentation of the Project Management Plan required to be prepared, submitted and accepted prior to or in conjunction with Maintenance Acceptacne have been so prepared, submitted and accepted;

(i) All Submittals required by the Project Management Plan or DB Documents to be submitted to and accepted by GDOT have been submitted to and accepted by GDOT, in the form and content required by the Project Management Plan or DB Documents;

(j) DB Team has received, and paid all associated fees for, all applicable Governmental Approvals and other applicable third party approvals required pursuant to the DB Documents, and there exists no uncured material violation of the terms and conditions of any such Governmental Approval or other third party approvals;

(k) DB Team has delivered to GDOT all warranties, manuals and other Deliverables as required pursuant to the Technical Provisions; and

(l) DB Team has delivered to GDOT verification of all required post construction period, including completed operations, Insurance Policies required under this DB Documents.

7.7.3.3 DB Team shall provide GDOT with written notification when DB Team determines it has achieved Maintenance Acceptance. During the fifteen (15) day period following receipt of such notification, DB Team, GDOT shall meet and confer and exchange information on a regular cooperative basis with the goal being GDOT's orderly, timely inspection and review of the Project and the Record Drawings, and GDOT's issuance of a written certificate of Maintenance Acceptance.

7.7.3.4 During such fifteen (15) day period, GDOT shall conduct an inspection of the Punch List items, a review of the Record Drawings and such other investigation as may be necessary to evaluate whether the conditions to Maintenance Acceptance are satisfied. GDOT shall deliver a written report of findings and recommendations to DB Team following such inspection, review and investigation and in any case by the end of such fifteen (15) day period.

7.7.3.5 Within five (5) days after expiration of such fifteen (15) day period GDOT shall either (a) issue a certificate of MaintenanceAcceptance or (b) notify DB Team in writing setting forth, as applicable, why Maintenance Acceptance has not been achieved. If GDOT and DB Team cannot agree as to the date of Maintenance Acceptance, such Dispute shall be resolved according to GDOT Standard Specification 105.13 "Claims for Adjustments and Disputes."

7.8 Hazardous Materials Management

7.8.1 DB Team shall comply with with all requirements set forth in GDOT Standard Specification 107.22 and Exhibit 11.

7.9 Environmental Compliance

Throughout the course of the Design Work and Construction Work, DB Team's Work shall take into account, be coordinated to allow for, and be performed in accordance with all environmental mitigation measures required under the Environmental Approvals, including the NEPA/GEPA Approval and any other Governmental Approvals for the Project, or under the DB Documents, and shall comply with all other conditions and requirements of the Environmental Approvals in accordance with Section 4 of the Technical Provisions, provided that the foregoing shall not require nor imply any requirement for DB Team to perform any remediation or disposal of Pre-existing Hazardous Materials or GDOT Release(s) of Hazardous Materials.

7.10 Meetings

7.10.1 Meetings

7.10.1.1 DB Team shall conduct regular progress meetings with GDOT at least once a month during the course of Design Work and Construction Work. These meetings shall be attended by the DB Team's Lead Contractor's Project Manager and the Lead Design Engineer or Authorized Representatives of each and any other Key Personnel as needed for productive use of the meetings.

7.10.1.2 In addition, GDOT and DB Team, through their respective Authorized Representatives, shall meet from time to time at the other Party's request to discuss and resolve matters relating to the Work or the Project.

7.10.1.3 DB Team shall schedule all meetings with GDOT at a date, time and place reasonably convenient to both Parties and, except in the case of urgency, shall provide GDOT with written notice and a meeting agenda at least three (3) Business Days in advance of each meeting.

7.10.1.4 DB Team shall be responsible to document and maintain the full subject matter of all meetings and shall distribute copies of meeting minutes to GDOT not later than five (5) days following such meetings.

7.11 Contractor Warranties and Correction of Non-Conforming and Defective Work

7.11.1 DB Team shall obtain customary and reasonable warranties from all Contractors with respect to design, materials, workmanship, installations, equipment, tools, supplies, software or services, all of which DB Team shall cause to be expressly extended and assigned to GDOT, or its designee; provided that the foregoing requirement shall not apply to standard, pre-specified manufacturer warranties of mass-marketed materials, products (including software products), equipment or supplies where the warranty cannot be extended to GDOT using commercially reasonable efforts. To the extent that any Contractor warranty would be voided by reason of DB Team's negligence in incorporating material or equipment into the Work, DB Team shall be responsible for correcting such defect.

7.11.2 Contractor warranties (if any) are in addition to all rights and remedies available under the DB Documents or applicable Law or in equity, and shall not limit DB Team's liability or responsibility imposed by the DB Documents or applicable Law or in equity with respect to the Work, including liability for design defects, latent construction defects, strict liability, breach, negligence, willful misconduct or fraud.

7.11.3 Reserved.

7.11.4 When any act, omission, or other action of DB Team occurs that violates the requirements, conditions, or terms of the DB Documents, or affects the health, safety, or welfare of the public or natural resources, GDOT shall have the right, but not the obligation, to require and direct DB Team to take prompt action to replace, repair, or restore such damage, injury or condition within a time frame established by GDOT, at DB Team's sole cost and expenses and without entitlement to a Relief Event or Compensation Event.

7.12 Reserved

7.13 Maintenance During Construction Work

7.13.1 GDOT shall be responsible for the operation and maintenance of the Existing Right of Way and any acquired right or interest in any Required Right of Way until the Construction Commencement Date. Upon NTP 3, DB Team shall assume full responsibility for maintenance of all Elements within the Construction Maintenance Limits in accordance with the Construction Maintenance Limits Plan and the requirements of the DB Documents.

7.13.2 Upon Maintenance Acceptance, GDOT will assume responsibility for the operation and maintenance of the entire Project, provided that where GDOT has opened any portion of the Project to the public prior to Maintenance Acceptance, GDOT shall then assume, responsibility for the operations and maintenance of such portions of the Project at such earlier time, provided, however that in all cases, DB Team shall remain responsible for all Work until Maintenance Acceptance and nothing contained herein shall otherwise limit any warranty obligations of DB Team with respect to any Defect or non-conforming Work.

7.14 For Best Value Projects Only: Impact of ATCs on the Project

7.14.1 This Article 7.14 shall only apply for those projects awarded by Best Value.

7.14.2 If implementation of an ATC forming part of the Project requires the approval or consent of any Government Entity (other than GDOT) or other third party, then (a) DB Team will have full responsibility for, and bear the full risk of, obtaining any such approval or consent, and (b) if such approval or consent is not granted, or there is an unreasonable and unjustified delay in obtaining such approval or consent (subject to Article 14) (i) DB Team shall perform the Work as if such ATC had never formed part of the Project, and shall not be entitled to any additional time or compensation as a result thereof. The foregoing shall not limit DB Team's rights with respect any claim under subpart (n) of the definition of Compensation Event or subpart (t) of the definition of Relief Event on account of delays or impact costs solely related to the re-evaluation of the NEPA Approval after expiration of the GDOT Re-evaluation Period.

Article 8 SECURITY AND INCIDENT RESPONSE

8.1.1 Security and Incident Response

8.1.1.1 DB Team is responsible for the safety and security of the applicable portion of the Project that is under the control of any DB Team-Related Entity and the workers and public thereon during the performance of the Work.

8.1.1.2 Reserved

8.1.1.3 DB Team shall perform and comply with the provisions of the Technical Provisions concerning Incident Response, safety and security.

8.1.1.4 DB Team shall implement all Incident response, safety and security procedures, protocols and requirements set forth in the Incident Management Plan (a component of the Project Management Plan).

Article 9 MANAGEMENT SYSTEMS AND OVERSIGHT

9.1 Project Management Plan

9.1.1 DB Team is responsible for all quality assurance activities necessary to manage the Work, including the Utility Adjustment Work. DB Team shall undertake all required aspects of quality assurance for the Project and Work in accordance with the accepted Project Management Plan and Good Industry Practice.

9.1.2 DB Team shall develop the Project Management Plan and its component parts, plans and other documentation in accordance with the Proposal, the requirements set forth in Section 2 of the Technical Provisions and Good Industry Practice.

9.1.3 DB Team shall submit to GDOT for acceptance in its good faith discretion in accordance with the procedures described in Article 6.3 of this Agreement and the Technical Provisions each component part, plan and other documentation of the Project Management Plan and any proposed changes or additions to or revisions of any such component part, plan or other documentation. Each component part, plan and other documentation of the Project Management Plan and each proposed change or addition to or revision of any such component part, plan or other documentation shall constitute a separate Submittal for purposes of Article 6.3. GDOT may propose any change required to comply with Good Industry Practice or to reflect a change in working practice to be implemented by DB Team.

9.1.4 DB Team shall not commence or permit the commencement of any aspect of the design or construction before the relevant component parts, plans and other documentation of the Project Management Plan applicable to such Work have been submitted to and accepted by GDOT.

9.1.5 If any part, plan or other documentation of the Project Management Plan refers to, relies on or incorporates any manual, plan, procedure or like document then all such referenced or incorporated materials shall be submitted to GDOT for acceptance in its good faith discretion at the time that the relevant part, plan or other documentation of the Project Management Plan or change, addition or revision to the Project Management Plan is submitted to GDOT.

9.1.6 DB Team shall carry out internal audits of the Project Management Plan at the times prescribed in the Project Management Plan.

9.1.7 DB Team shall cause each of its Contractors at every level to comply with the applicable requirements of the accepted Project Management Plan.

9.1.8 The DB Team shall designate a Quality Manager who shall, irrespective of their other responsibilities, have defined authority for ensuring the establishment and maintenance of

the Project Management Plan and reporting to GDOT on the performance of the Project Management Plan.

9.2 Traffic Management

9.2.1 Upon GDOT issuance of NTP 3 and throughout construction term of the Project, DB Team shall be responsible for the general management of traffic on the applicable portion of the Project under the control of any DB Team-Related Entity. DB Team shall manage traffic so as to preserve and protect safety of traffic on such portions and Related Transportation Facilities and, to the maximum extent practicable, to avoid disruption, interruption or other adverse effects on traffic flow, throughput or level of service on the Related Transportation Facilities. DB Team shall conduct and carry out traffic management in accordance with all applicable Technical Provisions, Technical Documents, Laws and Governmental Approvals, and in accordance with the Transportation Management Plan, as well as any directives as may be required pursuant to Article 8.1.1.2.

9.2.2 DB Team shall prepare and submit to GDOT, for GDOT acceptance a Transportation Management Plan for managing traffic on the Project and Related Transportation Facilities, during the period of construction (from the period from NTP 3 to Maintenance Acceptance), addressing (a) orderly and safe movement and diversion of traffic on the Project and Related Transportation Facilities, and (b) orderly and safe diversion of traffic on the Related Transportation Facilities necessary in connection with field maintenance and repair work in response to Incidents, Emergencies and lane closures. The Transportation Management Plan shall promote safe and efficient operation of the Project and Related Transportation Facilities at all times during the course of construction of the Project, including during Utility Adjustment Work. DB Team shall prepare the Transportation Management Plan according to the schedule set forth in Section 18 of the Technical Provisions. The Transportation Management Plan shall comply with the Technical Provisions and Technical Documents concerning traffic management and traffic operations.

9.2.3 GDOT shall have at all times, without obligation or liability to DB Team, the right to:

9.2.3.1 Issue a Directive Letter to DB Team regarding traffic management and control (with which DB Team shall comply), or directly assume traffic management and control, of the Project during any period that (a) GDOT designates the Project or portion of the Project for immediate use as an emergency evacuation route or a route to respond to a disaster proclaimed by the Governor of Georgia, the President of the United States, or by any other federal or State agency, or any of the aforementioned's respective designees, including reversing the direction of traffic flow during such period, (b) GDOT designates the Project or a portion of the Project for immediate use as an alternate route for diversion of traffic from any interstate or Highway temporarily closed to all lanes in one or both directions due to incident or emergency or (c) the Commissioner determines such action will be in the public interest as a result of an emergency or natural disaster; and

9.2.3.2 Provide on the Project, via message signs or other means consistent with Good Industry Practice, non-discriminatory traveler and driver information, and other public information (e.g. amber alerts), provided that the means to disseminate such information does not materially interfere with the Work.

Article 10 CONTRACTING AND LABOR PRACTICES

10.1 Reserved.

10.2 Responsibility for Work, Contractors and Employees

10.2.1 DB Team shall retain or cause to be retained only Contractors that are qualified, experienced and capable in the performance of the portion of the Work assigned. DB Team shall assure that each Contractor has at the time of execution of the Contract, and maintains at all times during performance of the assigned Work, all licenses required by applicable Laws. DB Team shall require all Contractors to adhere to the requirements herein with respect to Subcontractors.

10.2.2 The retention of Contractors by DB Team will not relieve DB Team of its responsibilities hereunder or for the quality of the Work or materials or services provided by it.

10.2.3 Each Contract shall include terms and conditions sufficient to ensure compliance by all Contractors and Subcontractors, all parties performing any Work on behalf thereof, with the requirements of the DB Documents, and shall include those terms that are specifically required by the DB Documents to be included therein, including, to the extent applicable, those set forth in Exhibit 8 and any other applicable federal requirements.

10.2.4 Nothing in the DB Documents will create any contractual relationship between GDOT and any Subcontractor. No Contract entered into by or under DB Team shall impose any obligation or liability upon GDOT to any Subcontractor, or any of their respective employees.

10.2.5 DB Team shall supervise and be fully responsible for the actions, omissions, negligence, willful misconduct, or breach of applicable Law or contract by any Contractor or DB Team-Related Entity, or their respective members, officers, directors, partners, and employees, as though DB Team directly employed all such individuals.

10.3 Reserved.

10.4 Key Personnel

10.4.1 DB Team shall retain, employ and utilize the individuals specifically listed in Exhibit 2 to fill the corresponding Key Personnel positions listed therein. DB Team shall not change or substitute any such individuals except due to retirement, death, disability, incapacity, or voluntary or involuntary termination of employment, or as otherwise accepted by GDOT pursuant to Article 10.4.2. In such circumstances, DB Team shall promptly propose a replacement with comparable experience for such position.

10.4.2 DB Team shall notify GDOT in writing of any proposed replacement for any Key Personnel position. GDOT shall have the right to review the qualifications and character of each individual to be appointed to a Key Personnel position (including personnel employed by Contractors to fill any such position) and to accept or disapprove use of such individual in such position prior to the commencement of any Work by such individual. If DB Team fails to provide a proposed replacement that is sufficiently qualified to GDOT within ninety (90) days after notifying GDOT of a proposed replacement for any Key Personnel position, then such failure shall be constitute a DB Team Default pursuant to Article 17.1.1.

10.4.3 DB Team shall cause each individual filling a Key Personnel position to dedicate the full amount of time necessary for the proper prosecution and performance of the Work.

10.4.4 DB Team shall provide GDOT phone numbers and email addresses for all Key Personnel. GDOT requires the ability to contact Key Personnel twenty four (24) hours per day, seven (7) days per week.

10.5 Reserved.

10.6 Labor Standards

10.6.1 In the performance of its obligations under the DB Documents, DB Team at all times shall comply, and require by contract that all Contractors and vendors comply, with all applicable federal and State labor, occupational safety and health standards, rules, regulations and federal and State orders.

10.6.2 All individuals performing the Work shall have the skill and experience and any licenses or certifications required to perform the Work assigned to them.

10.6.3 If any individual employed by DB Team or any Contractor is not performing the Work in a proper, safe and skillful manner, then DB Team shall, or shall cause such Contractor to, remove such individual and such individual shall not be re-employed on the Work. If, after notice and reasonable opportunity to cure, such individual is not removed or if DB Team fails to ensure that skilled and experienced personnel are furnished for the proper performance of the Work, then GDOT may suspend the affected portion of the Work by delivering to DB Team written notice of such suspension. Such suspension shall in no way relieve DB Team of any obligation contained in the DB Documents or entitle DB Team to any additional compensation or time extension hereunder.

10.6.4 DB Team and its Contractors shall comply with the Georgia Immigration & Compliance Act ("Immigration Act"), O.C.G.A. § 13-10-90, *et seq*. DB Team must certify compliance with the Immigration Act using the form attached as Form R. The required certificates and affidavits must be filed with GDOT and copies maintained by DB Team and each Contractor as of the Effective Date, recertified as of July 15 of each year, and again recertified upon final completion of the Work under the applicable Contract. State officials, including officials of the Georgia Department of Labor and GDOT, retain the right to inspect and audit the Project and employment records of DB Team and all Contractors without notice during normal working hours until the Work under the applicable Contract is complete, and as otherwise specified by Law.

10.7 Reserved.

10.8 Non-Discrimination; Equal Employment Opportunity

10.8.1 DB Team shall not, and shall cause the Contractors to not, discriminate on the basis of race, color, national origin, sex, age, religion or handicap in the performance of the Work under the DB Documents. DB Team shall carry out, and shall cause the Contractors to carry out, applicable requirements of 49 CFR Part 26. Failure by DB Team to carry out these requirements is a material breach of this Agreement, which may result in a Default Termination Event and the termination of this Agreement or such other remedy permitted hereunder as

GDOT deems appropriate (subject to DB Team's rights to notice and opportunity to cure set forth in this Agreement).

10.8.2 DB Team shall include the immediately preceding paragraph in every Contract (including purchase orders and in every Contract of any DB Team-Related Entity for Work), and shall require that they be included in all Contracts at lower tiers, so that such provisions will be binding upon each Contractor.

10.9 Disadvantaged Business Enterprise

10.9.1 General

10.9.1.1 DB Team shall comply with GDOT's Disadvantaged Business Enterprise (DBE) policy and program. The purpose of GDOT's DBE policy and program is to ensure that DBEs shall have an equal opportunity to participate in the performance of contracts financed in whole or in part with federal funds. DB Team shall comply with all applicable requirements set forth in GDOT's DBE policy and program.

10.9.1.2 DB Team shall include provisions to effectuate GDOT's DBE policy and program in every Contract to which it is a party (including purchase orders and task orders for Work), and shall require that they be included in all Contracts at lower tiers (including purchase orders and task orders for Work), so that such provisions will be binding upon each Contractor.

10.9.2 DBE Participation Goals

10.9.2.1 GDOT's overall statewide DBE goal is fifteen percent (15%) of the overall Project design and construction costs.

10.9.2.2 DB Team shall exercise good faith efforts to achieve such DBE participation goal for the Project.

10.10 Job Training Program

10.10.1 DB Team, at its own cost and expense, shall include on-the-job training and shall submit to GDOT review and acceptance a plan meeting all requirements set forth in GDOT Standard Specification 158. Refer to the schedule of items for project specific training hours.

10.11 Prevailing Wages

10.11.1 DB Team shall pay or cause to be paid to all applicable workers employed by it or its Contractors to perform the Work not less than the prevailing rates of wages, as provided in the statutes and regulations applicable to public work contracts, including the Davis-Bacon Act, and as provided in Exhibit 8. DB Team shall comply and cause its Contractors to comply with all Laws pertaining to prevailing wages. For the purpose of applying such Laws, the Project shall be treated as a public work paid for in whole or in part with public funds (regardless of whether public funds are actually used to pay for the Project). The foregoing shall not apply to Contracts at any tier with Governmental Entities.

10.11.2 It is DB Team's sole responsibility to determine the wage rates required to be paid. In the event rates of wages and benefits change while this Agreement is in effect, DB Team shall bear the cost of such changes and shall have no Claim against GDOT on account of such changes. Without limiting the foregoing, no Claim will be allowed which is based upon DB Team's lack of knowledge or a misunderstanding of any such requirements.

10.11.3 DB Team shall comply and cause its Contractors, other than GDOT or Governmental Entities acting as Contractors, to comply with all Laws regarding notice and posting of intent to pay prevailing wages, of prevailing wage requirements and of prevailing wage rates.

10.12 Prompt Payment to Contractors and Pay When Paid Provisions

DB Team shall comply with the Georgia Prompt Payment Act, Code Section 13-11-1 *et seq*. Further, neither DB Team, the Design-Build Contractor or Contractor, nor any Subcontractor shall impose retainage upon any consultant, laborer, subcontractor, vendor, materialman, or supplier with whom any of them have contracted.

10.13 Suspension and Debarment

DB Team shall deliver to GDOT, not later than January 31st of each year through Final Acceptance, and upon Final Acceptance, signed certifications regarding suspension, debarment, ineligibility, voluntary exclusion, convictions and civil judgments from DB Team, from each affiliate of DB Team (as "affiliate" is defined in 29 CFR 98.905 or successor regulation of similar import), and from each Contractor whose Contract amount equals or exceeds $100,000. The annual certification shall be substantially in the form of paragraphs 1.a through 1.d of Attachment 7 to Exhibit 8 (Federal Requirements).

10.14 Uniforms

Any uniforms, badges, logos and other identification worn by personnel of DB Team-Related Entities shall bear colors, lettering, design or other features to assure clear differentiation from those of GDOT and their employees.

Article 11 RELATED AND OTHER FACILITIES

11.1 Integration with Related Transportation Facilities

11.1.1 DB Team shall locate, configure, design, and construct the termini, interchanges, entrances and exits of the Project so that the Project will be compatible and integrated with the location, configuration, design, operation and maintenance of, and provide a smooth, safe transition of traffic to and from, Related Transportation Facilities, as set forth in Section 11 of the Technical Provisions. The design for the Project shall include and provide for such compatibility, integration and transition. The design and construction of the Project, shall satisfy all provisions of the Technical Provisions and Project Management Plan relating to compatibility, integration and transition with or at Related Transportation Facilities, including those concerning signage, signaling and communications with Users.

11.1.2 Without limiting the foregoing, DB Team shall cooperate and coordinate with GDOT and any third party that owns, constructs, manages, operates or maintains a Related Transportation Project with regard to the construction, maintenance and repair programs and

schedules for such Related Transportation Facilities, in order to minimize disruption to the operation thereof.

11.1.3 To assist DB Team, GDOT shall provide to DB Team during normal working hours, reasonable access to plans, surveys, drawings, as-built drawings, specifications, reports and other documents and information in the possession of GDOT or their contractors and consultants pertaining to Related Transportation Facilities. DB Team, at its expense, shall have the right to make copies of the same. DB Team, at its expense, shall conduct such other inspections, investigations, document searches, surveys and other work as may be necessary to achieve compatibility, integration and transition with those Related Transportation Facilities identified in Section 11 of the Technical Provisions.

11.1.4 GDOT shall provide reasonable assistance to DB Team, upon its request and at its expense, in obtaining cooperation and coordination from third parties that own, manage, operate or maintain Related Transportation Facilities and in enforcing rights, remedies and warranties that DB Team may have against any such third parties. Such assistance may include GDOT's participation in meetings and discussions. In no event shall GDOT be required to bring any legal action or proceeding against any such third party.

11.1.5 GDOT shall have at all times, without obligation or liability to DB Team, the right to conduct traffic management activities on GDOT's Related Transportation Facilities and all other facilities of the State transportation network in the area of the Project in accordance with its standard traffic management practices and procedures in effect from time to time.

Article 12 SAFETY COMPLIANCE

12.1 Safety Compliance

12.1.1 Safety Compliance Orders

12.1.1.1 GDOT shall use good faith efforts to inform DB Team at the earliest practicable time of any circumstance or information relating to the Project which in GDOT's reasonable judgment is likely to result in a Safety Compliance Order. Except in the case of Emergency, GDOT shall consult with DB Team prior to issuing a Safety Compliance Order concerning the risk to public or worker safety, alternative compliance measures, cost impacts, and the availability of DB Team resources to fund the Safety Compliance work.

12.1.1.2 GDOT's duties shall include monitoring and inspecting for the purpose of determining whether any circumstances exist that warrant issuance of a Safety Compliance Order with respect to the Design Work and the Construction Work, and giving reports and recommendations to the DB Team with respect thereto.

12.1.1.3 Subject to conducting such prior consultation, GDOT may issue Safety Compliance Orders to DB Team at any time from and after the Effective Date.

12.1.2 Duty to Comply

12.1.2.1 Subject to Article 12.1.1, DB Team shall implement all Safety Compliance as expeditiously as reasonably possible following issuance of the Safety Compliance Order. DB Team shall diligently prosecute the work necessary to achieve such

Safety Compliance until completion, subject to any remedies allowed from the occurrence of a Relief Event.

12.1.2.2 DB Team shall perform all work required to implement Safety Compliance at DB Team's sole cost and expense. Without limiting the foregoing and for the avoidance of doubt, in no event shall DB Team be entitled to (a) issue a Change Request, or (b) except as provided in Article 12.1.3, claim that a Compensation Event or Relief Event has occurred or resulted from the existence of a Safety Compliance Order.

12.1.3 Contesting Safety Compliance Orders

DB Team may contest a Safety Compliance Order by delivering to GDOT written notice setting forth (a) DB Team's claim that no Safety Compliance conditions exist to justify the Safety Compliance Order, (b) DB Team's explanation of its claim in reasonable detail and (c) DB Team's estimate of impacts on costs and schedule attributable to the contested Safety Compliance Order. If GDOT does not receive such written notice prior to issuance of a Safety Compliance Order, or within fifteen (15) days after GDOT issues an emergency Safety Compliance Order, then DB Team thereafter shall have no right to contest. If DB Team timely contests a Safety Compliance Order, DB Team nevertheless shall implement the Safety Compliance Order, but if it is finally determined following the proceedures set forth in GDOT Standard Specification 105.13 "Claims for Adjustments and Disputes" that Safety Compliance conditions did not exist, then the Safety Compliance Order shall be treated as a Directive Letter for a GDOT Change.

Article 13 RELIEF EVENTS; COMPENSATION EVENTS

13.1 Relief Events

13.1.1 Relief Event Notice

13.1.1.1 If at any time DB Team determines that a Relief Event has occurred or is imminent, DB Team shall promptly, submit a written Relief Event Notice to GDOT.

13.1.1.2 The Relief Event Notice shall include (a) a statement of the Relief Event upon which the claim of delay or inability to perform is based, including its nature, the date of its occurrence and its duration; (b) the effect of the Relief Event on DB Team's ability to perform any of its obligations under the DB Documents, including details of the relevant obligations, an impacted delay analysis indicating all affected activities on any Critical Path (with activity durations, predecessor and successor activities and resources, including Float available pursuant to Article 3.3.5), and the likely duration of that effect; (c) an explanation of the measures that DB Team proposes to undertake to mitigate the delay and other consequences of the Relief Event; and (d) an estimate of the delay in performance of any obligations under the DB Documents attributable to the Relief Event. If a single Relief Event is a continuing cause of delay, only one Relief Event Notice shall be necessary.

13.1.1.3 If, following issuance of any Relief Event Notice, DB Team receives or becomes aware of any further information relating to the Relief Event and/or any delay in performance or failure to perform, it shall submit such further information to GDOT not later than seven (7) days of DB Team's receipt or knowledge, as the case may be. GDOT may request from DB Team any further information that GDOT may reasonably require, and DB Team shall supply the same within a reasonable period after such request.

13.1.1.4 Time is of the essence in DB Team's delivery of its written Relief Event Notice. Accordingly, if for any reason DB Team fails to deliver a Relief Event Notice in strict accordance with this Article 13.1:

(a) Within thirty (30) days following the date (herein the "starting date") on which DB Team first became aware (or should have been aware, using all reasonable due diligence) of the Relief Event, DB Team shall be deemed to have irrevocably and forever waived and released the portion of any Claim or right to relief for adverse effect attributable to the Relief Event accruing after such thirty (30) day deadline and until the date DB Team submits the written Relief Event Notice; and

(b) Within one hundred and eighty (180) days following the starting date, DB Team shall be deemed to have irrevocably and forever waived and released any and all Claim or right to relief (including extension of time for performance of Design Work or Construction Work) for any adverse effect attributable to such Relief Event.

13.1.2 Extensions of Time for Relief Events

13.1.2.1 If DB Team complies with the notice and information requirements in this Article 13.1, then within thirty (30) days after receiving the Relief Event Notice (and, if applicable, any required updates thereto) GDOT, acting reasonably, shall issue a Relief Event Determination. GDOT shall specify in the Relief Event Determination (a) the relevant obligations for which relief is given, (b) the period of time that Milestone Schedule Deadlines or periods set forth in the Project Schedule will be extended based on the number of days of delay affecting a Critical Path, after consumption of Float available pursuant to Article 3.3.5, that is directly attributable to the Relief Event and that cannot be avoided through reasonable mitigation measures and (c) if applicable, the period of time, if any, that the Contract Time will be extended. DB Team shall be relieved from the performance of obligations to the extent specified in the Relief Event Determination.

13.1.2.2 DB Team shall not be excused from compliance with applicable Laws, Technical Provisions or Technical Documents due to the occurrence of a Relief Event, except temporary inability to comply as a direct result of a Relief Event.

13.1.2.3 If GDOT is obligated to but does not provide a Relief Event Determination within such thirty (30) day period, DB Team shall have the right to assert a Claim against GDOT for the relevant Relief Event and have such Claim determined according to GDOT Standard Specification 105.13 "Claims for Adjustments and Disputes." Any Dispute regarding the occurrence of a Relief Event, the terms of the Relief Event Determination or waiver of DB Team's Claim or right to relief shall be resolved according to GDOT Standard Specification 105.13 "Claims for Adjustments and Disputes."

13.1.2.4 Without limiting DB Team's rights with respect to monetary relief for Compensation Events as set forth in this Agreement, the extensions of time as provided, if any, pursuant to this Article 13.1 are DB Team's sole remedy for a Relief Event.

13.1.2.5 Except to the extent of a Claim asserted by DB Team pursuant to Article 13.1.2.3 above, a Relief Event Determination shall be deemed to be a Supplement Agreement as set forth pursuant to Article 14.4.

13.2 Compensation Events

13.2.1 Compensation Event Notice

13.2.1.1 Except as otherwise expressly provided in this Agreement, if at any time DB Team determines that a Compensation Event has occurred or is imminent, DB Team shall submit a written Compensation Event Notice to GDOT.

13.2.1.2 The Compensation Event Notice shall identify the Compensation Event and its date of occurrence in reasonable detail, describe DB Team's current estimate of the anticipated adverse and beneficial effects of the Compensation Event, and include written analysis and calculation of DB Team's current estimate of the estimated increase or decrease in costs, to the extent applicable to the Compensation Event.

13.2.1.3 If, following issuance of any Compensation Event Notice, DB Team receives or becomes aware of any further information relating to the Compensation Event, it shall submit such further information to GDOT not later than seven (7) days of DB Team's receipt or knowledge, as the case may be. GDOT may request from DB Team any further information that GDOT may reasonably require, and DB Team shall supply the same within a reasonable period after such request.

13.2.1.4 Time is of the essence in DB Team's delivery of its written Compensation Event Notice. Accordingly, if for any reason DB Team fails to deliver such written Compensation Event Notice in strict accordance with this Article 13.2:

(a) Within thirty (30) days following the date (herein the "starting date") on which DB Team first became aware (or should have been aware, using all reasonable due diligence) of the occurrence of such Compensation Event, DB Team shall be deemed to have irrevocably and forever waived and released the portion of any Claim or right to compensation for costs attributable to such Compensation Event accruing after such thirty (30) day deadline and until the date DB Team submits the written Compensation Event Notice; and

(b) Within one hundred and eighty (180) days following the starting date, DB Team shall be deemed to have irrevocably and forever waived and released any and all Claim or right to compensation for any costs attributable to such Compensation Event.

13.2.2 If DB Team complies with the notice and information requirements in this Article 13.2, GDOT shall, acting reasonably, meet with DB Team within sixty (60) days of receipt of Compensation Event Notice and commence good faith negotiations to determine the Compensation Amount, if any, to which DB Team is entitled. If DB Team stands ready to commence good faith negotiations to determine the Compensation Amount within the foregoing time period but for any reason GDOT does not commence to engage therein within the foregoing time period, then, subject to compliance with the notice and information requirements in Articles 13.2.1.1 and 13.2.1.3, DB Team shall have the right to assert a Claim against GDOT for the relevant Compensation Amount (if any) and have such Claim determined according to GDOT Standard Specification 105.13 "Claims for Adjustments and Disputes."

13.2.3 The Compensation Amount, if any, shall be determined by applying the following provisions.

13.2.3.1 Cost impacts shall:

(a) Exclude (i) third-party entertainment costs, lobbying and political activity costs, costs of alcoholic beverages, costs for first class travel in excess of prevailing economy travel costs, and costs of club memberships, in each case to the extent that such costs would not be reimbursed to an employee of GDOT in the regular course of business, and (ii) unallowable costs under the following provisions of the federal Contract Cost Principles, 48 CFR 31.205: 31.205-8 (contributions or donations), 31.205-13 (employee morale, health, welfare, food service, and dormitory costs and credits), 31.205-14 (entertainment costs), 31.205-15 (fines, penalties, and mischarging costs), 31.205-27 (organization costs), 31.205-34 (recruitment costs), 31.205-35 (relocation costs), 31.205-43 (trade, business, technical and professional activity costs), 31.205-44 (training and education costs), and 31.205-47 (costs related to legal and other proceedings);

(b) Exclude amounts paid or to be paid to Affiliates in excess of the pricing DB Team could reasonably obtain in an arms' length, competitive transaction with an unaffiliated Contractor;

(c) Exclude those costs incurred in asserting, pursuing or enforcing any Claim or Dispute;

(d) Take into account any savings in costs resulting from the Compensation Event;

(e) Be subject to DB Team's obligation to mitigate cost increases and augment cost decreases in accordance with this Article 13.2;

(f) Shall not include any impact costs for delay for the sixty (60) cumulative days of delay due to interference or work of Separate Contractors engaged by GDOT or any other Governmental Entity with respect to the Project; and

(g) Be consistent and not exceed such amounts as set forth in the Technical Provisions.

13.2.3.2 In all cases the Compensation Amount shall be net of all insurance available to DB Team, or deemed to be self-insured by DB Team under Article 16.1.4.3, with respect to cost or revenue impacts of the Compensation Event.

13.2.3.3 The Compensation Amount shall not include any amount on account of federal, State, or local income taxes. Further and notwithstanding anything to the contrary herein, the Compensation Amount shall not include, under any circumstances, costs incurred by DB Team or any Contractors on account of charges or expenses due to (a) the business organization existence or maintenance of its business of any DB Team-Related Party or (b) labor or employment matters as a result of any Change in Law.

13.2.4 If the Compensation Event is under clause (j) of the definition of Compensation Event, then the Compensation Amount shall be limited to the incremental increase in costs of initial design and construction due to delay and disruption directly attributable to the court order.

13.2.5 DB Team shall share with GDOT all data, documents and information pertaining to bids for any work that is the subject of a Compensation Amount, and all of the aforementioned shall be on an Open Book Basis.

13.2.6 If GDOT and DB Team are unable to agree on the Compensation Amount within thirty (30) days after commencing good faith negotiations, or if DB Team asserts a Claim against GDOT for the Compensation Amount as provided in this Article 13.2, GDOT shall prepare a good faith estimate of the Compensation Amount, and shall pay the full undisputed portion of the Compensation Amount to DB Team within thirty (30) days, or any other arrangement as the parties may mutually agree upon. Any Dispute regarding occurrence of a Compensation Event, determination of the Compensation Amount or waiver of DB Team's Claim or right to compensation shall be resolved according to GDOT Standard Specification 105.13 "Claims for Adjustments and Disputes."

13.2.7 Following a determination of the Compensation Amount by mutual agreement or GDOT Standard Specification 105.13 "Claims for Adjustments and Disputes," GDOT shall pay such Compensation Amount (a) through periodic payments of the Compensation Amount in accordance with a written payment schedule determined by mutual agreement or through GDOT Standard Specification 105.13 "Claims for Adjustments and Disputes." corresponding to when the cost impacts that make up the Compensation Amount are anticipated to occur, (b) in a lump sum, payable as determined by mutual agreement or through GDOT Standard Specification 105.13 "Claims for Adjustments and Disputes," or (c) in such other manner as agreed upon by the Parties. GDOT, in its sole discretion, shall be entitled to select one or any combination of the foregoing methods of compensation, subject to the following terms and conditions.

13.2.8 Without limiting DB Team's rights with respect to non-monetary relief for Relief Events as set forth in this Agreement, the Compensation Amount shall represent the sole right to compensation and damages for the adverse financial effects of a Compensation Event. As a condition precedent to GDOT's obligation to pay any portion of the Compensation Amount, DB Team shall execute a full, unconditional, irrevocable release, in form reasonably acceptable to GDOT, of any Claims, Losses or other rights to compensation or other monetary relief associated with such Compensation Event, except for the Claim and right to the subject Compensation Amount, DB Team's right to non-monetary relief for a Relief Event, and the right to terminate this Agreement in accordance with Article 19.4 and to receive any applicable Termination Compensation.

13.2.9 Except to the extent of a Claim asserted by DB Team pursuant to Section 13.2.6 above, a Compensation Event Determination shall be deemed to be a Supplement Agreement as set forth pursuant to Article 14.4.

13.3 Mitigation

DB Team shall take all steps reasonably necessary to mitigate the consequences of any Relief Event or Compensation Event, including all steps that would generally be taken in accordance with Good Industry Practice.

Article 14 GDOT CHANGES; DB TEAM CHANGES; DIRECTIVE LETTERS

This Article 14 sets forth the requirements for obtaining all Supplemental Agreements under this Agreement. DB Team hereby acknowledges and agrees that the DB Contract Sum is full and adequate compensation for performance of all of the Work, subject only to those exceptions specified in Article 13 and this Article 14 DB Team unconditionally and irrevocably waives the right to any claim for any monetary compensation or other relief in addition to that

specifically provided under the terms of this Agreement, except in accordance with Article 13 and this Article 14. The foregoing waiver encompasses all theories of liability, whether in contract, tort (including negligence), equity, quantum meruit or otherwise, and encompasses all theories to extinguish contractual obligations, including impracticability, mutual mistake and frustration of purpose. Nothing in the Technical Provisions or Technical Documents shall have the intent or effect or shall be construed to create any right of DB Team to any Supplemental Agreement or other Claim for additional monetary compensation or other relief, any provision in the Technical Provisions or Technical Documents to the contrary notwithstanding.

14.1 GDOT Changes

14.1.1 GDOT's Right to Issue a Supplemental Agreement and Directive Letter

GDOT may, at any time and from time to time, without notice to any Surety, authorize, cause and/or require, pursuant to a Supplemental Agreement or Directive Letter, changes in the Work, including additions or deletions, or in terms and conditions of the Technical Provisions or Technical Documents (including changes in the standards applicable to the Work).

14.1.2 Request for Change Proposal

14.1.2.1 If GDOT desires to initiate a GDOT Change or to evaluate whether to initiate such a change, then GDOT may, at its discretion, issue a Request for Change Proposal. The Request for Change Proposal shall set forth the nature, extent and details of the proposed GDOT Change.

14.1.2.2 Within five (5) Business Days after DB Team receives a Request for Change Proposal, or such longer period to which the Parties may mutually agree, GDOT and DB Team shall consult to define the proposed scope of the change. Within five (5) Business Days after the initial consultation, or such longer period to which the Parties may mutually agree, GDOT and DB Team shall consult concerning the estimated financial and schedule impacts.

14.1.3 Within thirty (30) days following GDOT's delivery to DB Team of the Request for Change Proposal, DB Team shall provide GDOT with a written response as to whether, in DB Team's opinion, the proposed change constitutes a GDOT Change, will impact DB Team's costs and/or will impact DB Team's schedule, and if so, a detailed assessment of the cost and schedule impact of the proposed GDOT Change, including the following:

14.1.3.1 DB Team's detailed estimate of the impacts on costs of carrying out the proposed GDOT Change;

14.1.3.2 The effect of the proposed GDOT Change on the Project Schedule, including achievement of the Milestone Schedule Deadlines, taking into consideration DB Team's duty to mitigate any delay to the extent reasonably practicable; and

14.1.3.3 Any other relevant information related to carrying out the proposed GDOT Change.

14.1.4 GDOT shall be entitled, but not required, to obtain, from a qualified independent consultant of GDOT's choosing, a report prepared in accordance with Good Industry Practice as to the proposed GDOT Change related to the Design Work or the Construction Work, including

recommendations and comments concerning DB Team's estimate of the cost impacts and projected impact on the Project Schedule and Milestone Schedule Deadlines. GDOT shall pay for the work of any such consultant.

14.1.5 GDOT and DB Team, giving due consideration to any such report and study as may be commissioned by GDOT, shall exercise good faith efforts to negotiate a mutually acceptable Supplemental Agreement, including adjustment of the Project Schedule and Milestone Schedule Deadlines, any Compensation Amount to which DB Team is entitled, and the timing and method for payment of any Compensation Amount, in accordance with Article 13.2.

14.1.6 If GDOT and DB Team are unable to reach agreement on a Supplemental Agreement, GDOT may, in its sole discretion, deliver to DB Team a Directive Letter pursuant to Article 14.3.1 directing DB Team to proceed with the performance of the Work in question notwithstanding such disagreement. Upon receipt of such Directive Letter, pending final resolution of the relevant Supplemental Agreement according to proceedures set forth in GDOT Standard Specification 105.13 "Claims for Adjustments and Disputes," (a) DB Team shall implement and perform the Work in question as directed by GDOT and (b) GDOT will make interim payment(s) to DB Team on a monthly basis for the reasonable documented costs of the Work in question subject to subsequent adjustment through the proceedures set forth in GDOT Standard Specification 105.13 "Claims for Adjustments and Disputes."

14.1.7 GDOT shall be responsible for payment of the Compensation Amount agreed upon or determined through GDOT Standard Specification 105.13 "Claims for Adjustments and Disputes," through one of the payment mechanisms set forth in Article 13.2.7, and the Project Schedule and Milestone Schedule Deadlines shall be adjusted as agreed upon or determined through GDOT Standard Specification 105.13 "Claims for Adjustments and Disputes," and in accordance with Article 13.1, to reflect the effects of the Supplemental Agreement.

14.2 DB Team Changes

14.2.1 DB Team may request GDOT to accept modifications to the Technical Provisions or Technical Documents by submittal of a written Change Request using a form accepted by GDOT. The Change Request shall set forth DB Team's detailed estimate of impacts on costs and schedule attributable to the requested change.

14.2.2 GDOT, in its sole discretion, may accept or reject any Change Request proposed by DB Team, provided that GDOT will accept a Change Request necessary to bring the Technical Provisions or Technical Documents into compliance with applicable Law. GDOT may condition its acceptance on new or a modification of compensation for GDOT under this Agreement in order to benefit equally in the estimated net cost savings and revenue benefit, if any, attributable to the proposed change. If GDOT accepts such change, DB Team shall execute a Supplemental Agreement and shall implement such change in accordance with the Supplemental Agreement, applicable Technical Provisions, Technical Documents, the Project Management Plan, Good Industry Practice, and all applicable Laws.

14.2.3 DB Team shall be solely responsible for payment of any increased costs and for any Project Schedule delays or other impacts resulting from a DB Team proposed Change Request, other than on account of a Compensation Event or Relief Event accepted by GDOT. If the Change Request results in a decrease in the costs of designing, constructing or operating

the Project, the savings in costs shall be allocated between DB Team and GDOT as set forth in the Supplemental Agreement.

14.2.4 DB Team may implement and permit a Utility Owner to implement, without a Change Request or Supplemental Agreement, changes to a Utility Adjustment design that do not vary from the Technical Provisions or Technical Documents, but such changes are subject either to GDOT's acceptance as part of a Utility Work Plan as provided in Section 6.3.4 of the Technical Provisions.

14.2.5 No Change Request shall be required to implement any change to the Work that is not specifically regulated or addressed by the DB Documents or applicable Law.

14.2.6 Certain minor changes without significant cost savings or revenue benefits may be accepted in writing by GDOT, and in such event shall not require a Supplemental Agreement. Any other change in the requirements of the DB Documents shall require a Supplemental Agreement.

14.3 Directive Letters

14.3.1 GDOT may at any time issue a Directive Letter to DB Team regarding any matter for which a Supplemental Agreement can be issued or in the event of any Dispute regarding the scope of the Work or whether DB Team has performed in accordance with the requirements of the DB Documents. The Directive Letter will state that it is issued under this Article 14.3, will describe the Work in question and will state the basis for determining compensation, if any. Subject to Article 14.1.6, DB Team shall proceed immediately as directed in the letter, pending the execution of a formal Supplemental Agreement (or, if the letter states that the Work is within DB Team's original scope of Work or is necessary to comply with the requirements of the DB Documents, DB Team shall proceed with the Work as directed but shall have the right to assert a Claim that a GDOT Change has occurred).

14.3.2 The fact that a Directive Letter was issued by GDOT shall not be considered evidence that in fact a GDOT Change occurred. The determination whether a GDOT Change in fact occurred shall be based on an analysis of the original requirements of the DB Documents and a determination as to whether the Directive Letter in fact constituted a change in those requirements.

14.4 Final Relief Event And Compensation Event Determinations

14.4.1 Any final Relief Event Determination and/or final Compensation Event Determination that has been mutually accepted by GDOT and DB Team shall be set forth in a Supplemental Agreement. Such Supplemental Agreement shall provide for modification of the Contract Time and the Project Schedule, including to the extent so established by such Relief Event Determination, the Milestone Schedule Deadlines, and modification of the DB Contract Sum pursuant to any such Compensation Event Determination, as the case may be.

14.5 Reserved

Article 15 REPRESENTATIONS AND COVENANTS

15.1 DB Team Representations and Covenants

DB Team hereby represents to and covenants with GDOT as follows:

15.1.1 During all periods necessary for the performance of the Work, DB Team and its Contractor(s) will maintain all required authority, license status, professional ability, skills and capacity to perform the Work.

15.1.2 As of the Effective Date, DB Team has evaluated the constraints affecting design and construction of the Project, including the Property, the Existing Right of Way and Required Right of Way limits as well as the conditions of the NEPA/GEPA Document, and has reasonable grounds for believing and does believe that the Project can be designed and built within such constraints.

15.1.3 Except as to parcels that GDOT lacked title or access to prior to the Effective Date, DB Team, in accordance with Good Industry Practice and the requirements of the DB Documents, shall have examined the Site and surrounding locations, performed appropriate field studies and geotechnical investigations of the Site, investigated and reviewed available public and private records, and undertook other activities sufficient to familiarize itself with surface conditions and subsurface conditions, including the presence of Utilities, Hazardous Materials, contaminated groundwater, archeological, paleontological and cultural resources, and Threatened or Endangered Species, affecting the Site or surrounding locations; and as a result of such review, inspection, examination and other activities DB Team is familiar with and accepts the physical requirements of the Work, subject to GDOT's obligations regarding Hazardous Materials under Article 7.8 and Exhibit 11 and DB Team's rights to seek relief under Article 13 .

15.1.4 DB Team has familiarized itself with the requirements of any and all applicable Laws, including with limitation O.C.G.A. §48-13-30, et. seq., and the conditions of any required Governmental Approvals prior to entering into this Agreement. Except as specifically permitted under Article 13 or Article 14, DB Team shall be responsible for complying with the foregoing at its sole cost and without any additional compensation or time extension on account of such compliance, regardless of whether such compliance would require additional time for performance or additional labor, equipment and/or materials not expressly provided for in the DB Documents. As of the Effective Date, DB Team has no reason to believe that any Governmental Approval required to be obtained by DB Team will not be granted in due course and thereafter remain in effect so as to enable the Work to proceed in accordance with the DB Documents.

15.1.5 All Work furnished by DB Team will be performed by or under the supervision of Persons who hold all necessary, valid licenses to practice in the State, by personnel who are skilled, experienced and competent in their respective trades or professions, who are professionally qualified to perform the Work in accordance with the DB Documents and who shall assume professional responsibility for the accuracy and completeness of the Design Documents, Construction Documents and other documents prepared or checked by them.

15.1.6 As of the Effective Date, DB Team is a _____ duly organized and validly existing under the laws of _____ ***[Note: Information to be provided with execution version],*** has the requisite power and all required licenses to carry on its present and proposed activities, and has full power, right and authority to execute and deliver the DB Documents, Principal Project Documents as and to the extent applicable, and to perform each and all of the obligations of DB Team provided for herein and therein. DB Team is duly

qualified to do business, and is in good standing, in the State as of the Effective Date, and will remain duly qualified and in good standing throughout the term of this Agreement and for as long thereafter as any obligations remain outstanding under the DB Documents.

15.1.7 The execution, delivery and performance of the DB Documents, and all other Principal Project Documents to which DB Team is (or will be) a party have been (or will be) duly authorized by all necessary corporate action of DB Team; each person executing the DB Documents and all other such Project related documents, on behalf of DB Team has been (or at the time of execution will be) duly authorized to execute and deliver each such document on behalf of DB Team; and the DB Documents, and all such other Project related documents have been (or will be) duly executed and delivered by DB Team.

15.1.8 Neither the execution and delivery by DB Team of the DB Documents and the Principal Project Documents to which DB Team is (or will be) a party, nor the consummation of the transactions contemplated hereby or thereby, is (or at the time of execution will be) in conflict with or has resulted or will result in a default under or a violation of the governing instruments of DB Team.

15.1.9 As of the Effective Date, each of the DB Documents, the Principal Project Documents to which DB Team is (or will be) a party constitutes (or at the time of execution and delivery will constitute) the legal, valid and binding obligation of DB Team, enforceable against DB Team and, if applicable, each member of DB Team, in accordance with its terms, subject only to applicable bankruptcy, insolvency and similar laws affecting the enforceability of the rights of creditors generally and the general principles of equity.

15.1.10 As of the Effective Date, there is no action, suit, proceeding, investigation or litigation pending and served on DB Team which challenges DB Team's authority to execute, deliver or perform, or the validity or enforceability of, the DB Documents, and all other Project related documents to which DB Team is a party, or which challenges the authority of DB Team official executing the DB Documents, or the Principal Project Documents. DB Team has disclosed to GDOT prior to the Effective Date any pending and un-served or threatened action, suit, proceeding, investigation or litigation with respect to such matters of which DB Team is aware.

15.1.11 As of the Proposal Due Date, DB Team disclosed to GDOT in writing all organizational conflicts of interest of DB Team and its Contractors of which DB Team was actually aware; and between the Proposal Due Date and the Effective Date, DB Team has not obtained knowledge of any additional organizational conflict of interest, and there have been no organizational changes to DB Team or its Contractors identified in its Proposal, which have not been accepted in writing by GDOT. For this purpose, organizational conflict of interest has the meaning set forth in Chapter I of the RFP (Instructions to Proposers).

15.1.12 To the extent the Design-Build Contractor is not the DB Team, DB Team represents and warrants, as of the effective date of the Design-Build Contract, as follows: (a) the Design-Build Contractor is duly organized, validly existing and in good standing under the laws of the state of its organization; (b) with respect to Persons that individually hold more than ten percent (10%) of the capital stock of the Design-Build Contractor (including options, warrants and other rights to acquire capital stock), such stock is owned by the Persons whom DB Team has set forth in a written certification delivered to GDOT prior to the Effective Date; (c) the Design-Build Contractor has the power and authority to do all acts and things and execute

and deliver all other documents as are required to be done, observed or performed by it in connection with its engagement by DB Team; (d) the Design-Build Contractor has all necessary expertise, qualifications, experience, competence, skills and know-how to perform the design and construction of the Project in accordance with the DB Documents; and (e) the Design-Build Contractor is not in breach of any applicable Law that would have a material adverse effect on the design and construction of the Project.

15.1.13 The execution and delivery by DB Team of this Agreement and all other Project related documents to which DB Team is a party will not result, at the time of execution, in a default under any other agreement or instrument to which it is a party or by which it is bound.

15.1.14 The execution and delivery by DB Team of the DB Documents and performance by DB Team of its obligations thereunder will not conflict with any Laws applicable to DB Team that are valid and in effect on the Effective Date.

15.2 GDOT Representations and Covenants

GDOT hereby represents to and covenants with DB Team as follows:

15.2.1 As of the Effective Date, GDOT has full power, right and authority to execute, deliver and perform the DB Documents and the Principal Project Documents to which GDOT is a party and to perform each and all of the obligations of GDOT provided for herein and therein.

15.2.2 As of the Effective Date, each of the DB Documents and the Principal Project Documents to which GDOT is (or will be) a party constitutes (or at the time of execution and delivery will constitute) the legal, valid and binding obligation of GDOT, enforceable against GDOT in accordance with its terms, subject only to applicable bankruptcy, insolvency and similar laws affecting the enforceability of the rights of creditors generally and the general principles of equity.

15.2.3 The execution and delivery by GDOT of this Agreement and the Principal Project Documents to which GDOT is a party will not result, at the time of execution, in a default under any other agreement or instrument to which it is a party or by which it is bound.

15.2.4 The execution and delivery by GDOT of the DB Documents and performance by GDOT of its obligations thereunder will not conflict with any Laws applicable to GDOT that are valid and in effect on the Effective Date.

15.3 Survival of Representations and Covenants

The representations and covenants of DB Team and GDOT contained herein shall survive expiration or earlier termination of this Agreement.

15.4 Special Remedies for Mutual Breach of Representations and Covenants

Notwithstanding any other provision of this Agreement, if there exists or occurs any circumstance or event that constitutes or results in a concurrent breach of any of the representations or covenants set forth in this Article 15 by both DB Team and GDOT but does not also constitute or result in any other breach or default by either Party, then such breaches shall not form the basis for a Compensation Event or damage claim by GDOT against DB

Team. Instead, the only remedies shall be for the Parties to take action to rectify or mitigate the effects of such circumstance or event, to pursue severance and reformation of the DB Documents and Principal Project Documents as set forth in Article 24.13, or Termination by Court Ruling as set forth in Article 19.11 and Exhibit 20.

Article 16 INSURANCE; PERFORMANCE SECURITY; INDEMNITY

16.1 Insurance

16.1.1 Insurance Policies and Coverage

16.1.1.1 In addition to the insurance requirements covered elsewhere, provide insurance coverage of the following types and amounts:

(a) Valuable Papers: Insurance in an amount sufficient to assure the restoration of any plans, drawings, field notes or other similar data relating to the work covered by the Project is required. Insurance is to be maintained in full force and effect during the life of this Agreement.

(b) Professional Liability (Errors and Omissions): Insurance in an amount not less than one million dollars ($1,000,000) per claim (with a maximum of two hundred and fifty thousand dollars ($250,000) deductible per claim) during the agreement term and for a period of at least five (5) years after this Agreement is closed is required. Such a policy is to cover all of the DB Team's professional liabilities, whether occasioned by the DB Team, his employees, subcontractors or other agents, arising out of services performed under or in accordance with this Agreement.

(c) This form should be submitted to the Department along with the Contract at the Post Award meeting.

16.2 Performance and Payment Security

DB Team shall furnish, P&P Bonds meeting the requirements of this Article 16.2 as performance and payment security for the Work.

16.2.1 P&P Bonds

16.2.1.1 The DB Team shall furnish, or cause the furnishing of, P&P Bonds, DB Team shall obtain and deliver P&P Bonds in such amount as required pursuant to the terms set forth in the Standard Specification Section 103.05, identifying DB Team as the P&P Obligor, securing DB Team's obligations to perform the Work and to ensure that payments owing to Claimants are made with respect to such Work.

16.2.1.2 The P&P Bonds shall be issued by a properly licensed and U.S. Treasury listed surety(ies) that have not less than A or better and Class VIII by A.M. Best and Company's Insurance Reports Key Rating Guide, and listed on Treasury Department Circular 570, and be on the list of companies approved by the State for at least three of the last five (5) years from the date of the proposed bond issuance. If P&P Bonds are issued by more than one surety, such P&P Bonds shall be executed on a joint and several basis.

16.2.2 Reserved

16.2.3 Reserved.

16.3 Reserved

16.4 Rerserved

16.5 Indemnity by DB Team

16.5.1 Subject to Article 16.5.2, DB Team shall release, protect, defend, indemnify and hold harmless the Indemnified Parties from and against any and all Third Party Claims and Third Party Losses arising out of, relating to or resulting from:

16.5.1.1 The breach or alleged breach of the DB Documents by DB Team;

16.5.1.2 The failure or alleged failure by any DB Team-Related Entity to comply with the Governmental Approvals, any applicable Environmental Laws or other Laws (including Laws regarding Hazardous Materials Management);

16.5.1.3 Any alleged patent or copyright infringement or other allegedly improper appropriation or use by any DB Team-Related Entity of trade secrets, patents, proprietary information, know-how, copyright rights or inventions in performance of the Work, or arising out of any use in connection with the Project of methods, processes, designs, information, or other items furnished or communicated to GDOT or another Indemnified Party pursuant to the DB Documents; provided that this indemnity shall not apply to any infringement resulting from GDOT's failure to comply with specific written instructions regarding use provided to GDOT by DB Team;

16.5.1.4 The actual or alleged culpable act or omission, culpable error or misconduct of any DB Team-Related Entity in or associated with performance of the Work;

16.5.1.5 Any and all claims by any governmental or taxing authority claiming taxes based on gross receipts, purchases or sales, the use of any property or income of any DB Team-Related Entity with respect to any payment for the Work made to or earned by any DB Team-Related Entity;

16.5.1.6 Any and all stop notices, liens and claims filed in connection with the Work, including all expenses and attorneys', accountants' and expert witness fees and costs incurred in discharging any stop notice, lien or claim, and any other liability to Contractors, laborers and Suppliers for failure to pay sums due for their work, services, materials, goods, equipment or supplies, including interest and attorney's fees, provided that GDOT is not in default in payments owing (if any) to DB Team with respect to such Work;

16.5.1.7 Any actual or threatened DB Team Release of Hazardous Materials;

16.5.1.8 The claim or assertion by any other developer or contractor that any DB Team-Related Entity interfered with or hindered the progress or completion of work being performed by the other contractor or developer, or failed to cooperate reasonably with the other developer or contractor, so as to cause inconvenience, disruption, delay or loss, except where the DB Team-Related Entity was not in any manner engaged in the management, prosecution, protection or performance of the Work;

16.5.1.9 Any dispute or claim by a Utility Owner related to any DB Team-Related Entity's performance of, or failure to perform, the obligations under any Utility Agreement;

16.5.1.10 (a) Any DB Team breach of or failure to perform an obligation that GDOT owes to a third Person, including, but not limited to, Governmental Entities, under Law or under any agreement between GDOT and a third Person, where GDOT has delegated performance of the obligation to DB Team pursuant to the terms of the DB Documents, or (b) the negligent or willful acts or omissions of any DB Team-Related Entities which render GDOT unable to perform or abide by an obligation that GDOT owes to a third Person, including, but not limited to, Governmental Entities, under any agreement between GDOT and a third Person, where the agreement is previously disclosed or known to DB Team;

16.5.1.11 The fraud, bad faith, arbitrary or capricious acts, willful misconduct, negligence or violation of Law or contract by DB Team or Design-Build Contractor or any Affiliate of either in connection with DB Team's performance of real property acquisition services under the DB Documents;

16.5.1.12 Inverse condemnation, trespass, nuisance, interference with use and enjoyment of property or similar taking of or harm to real property by reason of (a) the failure of any DB Team-Related Entity to comply with Good Industry Practice, requirements of the DB Documents, Project Management Plan or Governmental Approvals, (b) the intentional misconduct or negligence of any DB Team-Related Entity, or (c) the entry onto or encroachment upon another's property by any DB Team-Related Entity;

16.5.1.13 If applicable, any violation of any federal or state securities or similar law by any DB Team-Related Entity;

16.5.1.14 Errors, inconsistencies or other defects in the design or construction of the Project and/or of Utility Adjustments, or the Work, included in the Design Work and/or Construction Work; or

16.5.1.15 Any claim asserted or alleged against GDOT in contradiction of Article 6.3.12.

16.5.2 Subject to the releases and disclaimers herein, including all the provisions set forth in Article 6.3.8, DB Team's indemnity obligation shall not extend to any Third Party Claims and Third Party Losses to the extent caused or contributed to by:

16.5.2.1 The sole negligence, recklessness or willful misconduct, bad faith or fraud of the Indemnified Party;

16.5.2.2 GDOT's breach of any of obligations under the DB Documents, subject to Article 6.3.12;

16.5.2.3 An Indemnified Party's violation of any Laws or Governmental Approvals; or

16.5.2.4 Any material defect inherent in a prescriptive design, or construction specification included in the DB Documents that was not drafted or provided by DB Team under this Agreement, but only where prior to occurrence of the Third Party Loss DB Team complied

with such specification and did not actually know, or would not reasonably have known, while exercising reasonable diligence, that it was deficient or, if DB Team actually knew of the deficiency, unsuccessfully sought GDOT's waiver or acceptance of a Change Request from such specification.

16.5.3 In claims by an employee of DB Team, a Contractor, anyone directly or indirectly employed by them or anyone for whose acts they may be liable, the indemnification obligation under this Article 16.5 shall not be limited by a limitation on the amount or type of damages, compensation or benefits payable by or for DB Team or a Contractor under workers' compensation, disability benefit or other employee benefits laws.

16.5.4 For purposes of this Article 16.5, "Third Party Claim" includes a claim, dispute, disagreement, cause of action, demand, suit, action, judgment, investigation, or legal or administrative proceeding which (a) is asserted, initiated or brought by any Indemnified Party's employee, agent or contractor against an Indemnified Party, (b) is within the scope of the indemnities and (c) is not covered by the Indemnified Party's worker's compensation program. For purposes of this Article 16.5, "Third Party Loss" includes any actual or alleged Loss sustained or incurred by such employee, agent or contractor.

16.6 Defense and Indemnification Procedures

16.6.1 If any of the Indemnified Parties receives notice of a claim that it believes is within the scope of the indemnities under Article 16.5, GDOT shall by writing as soon as practicable after receipt of the claim, (a) inform DB Team of the claim, (b) send to DB Team a copy of all written materials GDOT has received asserting such claim and (c) notify DB Team that should no insurer accept defense of the claim, the Indemnified Party will conduct its own defense unless DB Team accepts the tender of the claim in accordance with Article 16.6.3. As soon as practicable after DB Team receives notice of a claim or otherwise has actual knowledge of a claim, it shall tender the claim in writing to the insurers under all potentially applicable Insurance Policies and comply with all notice requirements contained in such Insurance Policies. GDOT and other Indemnified Parties also shall have the right to tender such claims to such insurers.

16.6.2 Subject to Article 16.6.4, if the insurer under any applicable Insurance Policy accepts the tender of defense, GDOT and DB Team shall cooperate in the defense as required by the Insurance Policy. If no insurer under potentially applicable Insurance Policies provides defense, then Article 16.6.3 shall apply.

16.6.3 If the defense is tendered to DB Team, then within thirty (30) days after receipt of the tender it shall notify the Indemnified Party whether it has tendered the matter to an insurer and (if not tendered to an insurer or if the insurer has rejected the tender) shall deliver a written notice stating that DB Team:

16.6.3.1 Accepts the tender of defense and confirms that the claim is subject to full indemnification hereunder without any "reservation of rights" to deny or disclaim full indemnification thereafter;

16.6.3.2 Accepts the tender of defense but with a "reservation of rights" in whole or in part, with a detailed statement as to the reasons for the "reservation of rights"; or

16.6.3.3 Rejects the tender of defense based on a determination that it is not required to indemnify against the claim under the terms of this Agreement, with a detailed statement as to the reasons for the denial.

16.6.4 If DB Team accepts the tender of defense under Article 16.6.3.1, DB Team acknowledges and agrees (and has caused the insurer to be so notified of the statutory requirements) that the Attorney General of the State shall represent and defend the State, GDOT and any officer, director, commissioner or employee of such Indemnified Parties; but GDOT will request that the Attorney General of the State, without limiting the authority of the Attorney General of the State, consider attorneys recommended by DB Team for appointment as Special Assistant Attorney General to represent and defend the referenced Indemnified Parties. DB Team may, at the option of the Attorney General, have the right to participate in the defense of the Indemnified Parties. In the event of litigation, any settlement on behalf of the Indemnified Parties must be expressly approved by the Attorney General of the State. The foregoing shall not relieve DB Team's obligation to bear the fees and costs of defending and settling such claim. During such defense:

16.6.4.1 DB Team shall fully and regularly inform the Indemnified Party and the Attorney General of the State of the progress of the defense and of any settlement discussions; and

16.6.4.2 Each Indemnified Party shall fully cooperate in said defense, provide to DB Team all materials and access to personnel it requests as necessary for defense, preparation and trial and which or who are under the control of or reasonably available to the Indemnified Party, and maintain the confidentiality of all communications between it and DB Team concerning such defense.

16.6.5 If DB Team responds to the tender of defense as specified in Article 16.6.3.2 or 16.6.3.3, such Indemnified Parties shall also be represented by the Attorney General of the State who shall otherwise control the defense of such claim, including settlement. The foregoing shall not relieve DB Team from its obligations to bear the fees and costs of defending and settling such claim.

16.6.6 Even if the Attorney General of the State has appointed counsel selected by DB Team to represent any of the Indemnified Parties, the Attorney General of the State may assume the defense of the applicable Indemnified Parties by delivering to DB Team written notice of such election and the reasons therefor, if the Indemnified Parties, at the time it gives notice of the claim or at any time thereafter, reasonably determines that:

16.6.6.1 A conflict exists between it and DB Team which prevents or potentially prevents DB Team from presenting a full and effective defense;

16.6.6.2 DB Team is otherwise not providing an effective defense in connection with the claim; or

16.6.6.3 DB Team lacks the financial capacity to satisfy potential liability or to provide an effective defense.

16.6.7 If any of the Indemnified Parties is entitled and elects to conduct its own defense pursuant hereto of a claim for which it is entitled to indemnification, DB Team shall reimburse on a current basis all reasonable costs and expenses any such Indemnified Parties incurs in

investigating and defending, including, but not limited to, attorney's fees. In the event the Indemnified Parties are entitled to and elect to conduct their own defense, then:

16.6.7.1 In the case of a defense conducted under Article 16.6.3.1, it shall have the right to settle or compromise the claim with DB Team's prior written consent, which shall not be unreasonably withheld or delayed;

16.6.7.2 In the case of a defense conducted under Article 16.6.3.2, it shall have the right to settle or compromise the claim with DB Team's prior written consent, which shall not be unreasonably withheld or delayed, or with approval of the court following reasonable notice to DB Team and opportunity to be heard and without prejudice to the Indemnified Party's rights to be indemnified by DB Team; and

16.6.7.3 In the case of a defense conducted under Article 16.6.3.3, it shall have the right to settle or compromise the claim without DB Team's prior written consent and without prejudice to its rights to be indemnified by DB Team.

16.6.8 A refusal of, or failure to accept, a tender of defense, as well as any Dispute over whether an Indemnified Party which has assumed control of defense is entitled to do so under Article 16.6.6, shall be submitted in accordance with GDOT Standard Specification 105.13 "Claims for Adjustments and Disputes." DB Team shall be entitled to contest an indemnification claim and pursue, through the proceedures set forth in GDOT Standard Specification 105.13 "Claims for Adjustments and Disputes," recovery of defense and indemnity payments it has made to or on behalf of the Indemnified Party.

16.6.9 In determining responsibilities and obligations for defending suits pursuant to this Article 16.6, specific consideration shall be given by the Parties to the following factors: (a) the party performing the activity in question; (b) the location of the activity and incident; (c) contractual arrangements then governing the performance of the activity; and (d) allegations of respective fault contained in the claim.

16.6.10 Notwithstanding anything to the contrary set forth in Article 16.5 or this Article 16.6, the Attorney General of the State of Georgia is the only counsel authorized to represent GDOT or any State affiliated agencies or departments. In the event that there is any potential conflict of interest that could reasonably arise in the representation of any Indemnified Party and DB Team in the defense of any action, suit or proceeding pursuant to Article 16.5 above or in the event that state or local law requires the use of specific counsel, (i) such Indemnified Party may elect in its sole and absolute discretion whether to waive such conflict of interest, and (ii) unless such Indemnified Party elects to waive such conflict of interest, or in any event if required by state or local law, then the counsel designated by the Indemnified Party shall solely represent such Indemnified Party and, if applicable, DB Team shall retain its own separate counsel, each at DB Team's sole cost and expense. The Attorney General of the State of Georgia will consider counsel recommended by DB Team for appointment as a Special Assistant Attorney General.

16.6.11 If a suit or proceeding based on a claimed infringement of a patent or copyright is brought against any of the Indemnified Parties, DB Team shall, at its own expense, defend or settle any such suit or proceeding if authorized to do so in writing by the Attorney General of the State of Georgia subject to the obligations of indemnification as set forth in Article 16.5.

16.6.12 DB Team, subject to Article 16.1.4.4, may settle the claim without the consent or agreement of the Indemnified Parties, unless the settlement (i) would result in injunctive relief or other equitable remedies or otherwise require the Indemnified Parties to comply with restrictions or limitations that adversely affect or materially impair the reputation and standing of the Indemnified Parties, (ii) would require the Indemnified Parties to pay amounts that DB Team or its insurer does not fund in full, (iii) would not result in the Indemnified Parties full and complete release from all liability to the plaintiffs or claimants who are parties to or otherwise bound by the settlement, or (iv) directly involves any such Indemnified Parties (in which case the Attorney General of the State of Georgia shall be the only counsel authorized to represent such parties with respect to any such settlement).

Article 17 DEFAULT; REMEDIES; CLAIM FOR ADJUSTMENTS AND DISPUTES

17.1 Default by DB Team; Cure Periods

17.1.1 DB Team Default

Subject to relief from its performance obligations pursuant to Articles 13.1.2.1 and 13.2.1.3, DB Team shall be in breach under this Agreement upon the occurrence of any one or more of the following events or conditions (each a "DB Team Default"):

17.1.1.1 DB Team (a) fails to begin the applicable Work within thirty (30) days following issuance of NTP 1;

17.1.1.2 An Abandonment;

17.1.1.3 DB Team fails to achieve Substantial Completion by the Substantial Completion Deadline, as the same may be extended pursuant to this Agreement;

17.1.1.4 DB Team fails to achieve Maintenance Acceptance by the Maintenance Acceptance Deadline, or fails to achieve such required elements of the Work by any applicable Milestone Deadline, as any such dates may be extended pursuant to this Agreement;

17.1.1.5 Any representation or covenant in the DB Documents made by DB Team, or any certificate, schedule, report, instrument or other document delivered by or on behalf of DB Team to GDOT pursuant to the DB Documents is materially false, materially misleading or materially inaccurate when made or omits material information when made;

17.1.1.6 DB Team fails to obtain, provide and maintain any insurance, bonds, or other performance security as and when required under this Agreement for the benefit of relevant parties, or fails to comply with any requirement of this Agreement pertaining to the amount, terms or coverage of the same;

17.1.1.7 DB Team makes or attempts to make or suffers a voluntary or involuntary assignment or transfer of all or any portion of this Agreement, the Project or DB Team's Interest, or there occurs a Change of Control, in violation of Article 21;

17.1.1.8 DB Team materially fails to timely observe or perform or cause to be observed or performed any other material covenant, agreement, obligation, term or condition required to be observed or performed by DB Team under the DB Documents (including material

failure to perform the Design Work, Construction Work, or any material portion thereof in accordance with the DB Documents); provided that this Article 17.1.1.8 shall not apply to DB Team Defaults specifically addressed by other provisions of Article 17.1.1;

17.1.1.9 After exhaustion of all rights of appeal, there occurs any suspension or debarment (distinguished from ineligibility due to lack of financial qualifications), or there goes into effect an agreement for voluntary exclusion, from bidding, proposing or contracting with any federal or State department or agency of (a) DB Team, (b) any member of DB Team with a material financial obligation owing to DB Team for equity or shareholder loan contributions, (c) any affiliate of DB Team for whom transfer of ownership would constitute a Change of Control, or (d) any Key Contractor whose work is not completed;

17.1.1.10 DB Team fails to (a) deliver to GDOT any remedial plan as may be required pursuant to Article 17.3.5 or (b) otherwise fails to fully comply with the schedule or specific elements of, or actions required under, any such accepted remedial plan;

17.1.1.11 DB Team commences a voluntary case seeking liquidation, reorganization or other relief with respect to itself or its debts under any U.S. or foreign bankruptcy, insolvency or other similar Law now or hereafter in effect, seeks the appointment of a trustee, receiver, liquidator, custodian or other similar official of it or any substantial part of its assets; becomes insolvent, or generally does not pay its debts as they become due; admits in writing its inability to pay its debts; makes an assignment for the benefit of creditors; or takes any action to authorize any of the foregoing; or

17.1.1.12 An involuntary case is commenced against DB Team seeking liquidation, reorganization, dissolution, winding up, a composition or arrangement with creditors, a readjustment of debts or other relief with respect to DB Team or DB Team's debts under any U.S. or foreign bankruptcy, insolvency or other similar Law now or hereafter in effect; seeking the appointment of a trustee, receiver, liquidator, custodian or other similar official of DB Team or any substantial part of DB Team's assets; seeking the issuance of a writ of attachment, execution, or similar process; or seeking like relief, and such involuntary case shall not be contested by DB Team in good faith or shall remain undismissed and unstayed for a period of sixty (60) days.

17.1.2 Forbearance and Cure Periods

For the purpose of GDOT's exercise of other remedies, subject to Article 17.2.2 and subject to remedies that this Article 17 expressly states may be exercised before lapse of a cure period, DB Team shall have the following cure periods with respect to the following DB Team Defaults:

17.1.2.1 Respecting a DB Team Default under Article 17.1.1.10, a period of five (5) days after GDOT delivers to DB Team written notice of the DB Team Default;

17.1.2.2 Respecting a DB Team Default under Article 17.1.1.6, a period of fifteen (15) days after GDOT delivers to DB Team written notice of the DB Team Default; provided that GDOT shall have the right, but not the obligation, to effect cure, at DB Team's expense, if a DB Team Default under Article 17.1.1.6 continues beyond five (5) days after such notice is delivered;

17.1.2.3 Respecting a DB Team Default under Article 17.1.1.1, 17.1.1.2, 17.1.1.10, 17.1.1.14, or 17.1.1.15, a period of thirty (30) days after GDOT delivers to DB Team written notice of the DB Team Default; provided that as to a DB Team Default under Article 17.1.1.1, such cure period shall not preclude or delay GDOT's immediate exercise, without notice or demand, of its right, but not the obligation, to effect cure, at DB Team's expense;

17.1.2.4 Respecting a DB Team Default under Article 17.1.1.5, 17.1.1.8 or 17.1.1.9, a period of thirty (30) days after GDOT delivers to DB Team written notice of the DB Team Default; provided that (a) if the DB Team Default is of such a nature that the cure cannot with diligence be completed within such time period and DB Team has commenced meaningful steps to cure immediately after receiving the default notice, DB Team shall have such additional period of time, up to a maximum cure period of one hundred and eighty (180) days, as is reasonably necessary to diligently effect cure, (b) as to Article 17.1.1.5, cure will be regarded as complete when the adverse effects of the breach are cured, and (c) as to Article 17.1.1.9, if the debarred or suspended Person is a managing member, general partner or controlling investor of DB Team, cure will be regarded as complete when DB Team proves it has removed such Person from any position or ability to manage, direct or control the decisions of DB Team or to perform Work;

17.1.2.5 Respecting a DB Team Default under Article 17.1.1.11 or 17.1.1.12, no cure period, and there shall be no right to notice of a DB Team Default under Article 17.1.1.11 or 17.1.1.12; and

17.1.2.6 Respecting a DB Team Default under Article 17.1.1.4 arising from DB Team's failure to achieve any Milestone Deadline other than the Substantial Completion Deadline or Maintenance Acceptance Deadline, a forbearance period of thirty (30) days from the date of such DB Team Default shall apply, provided that DB Team shall, as a condition to such forbearance period, be required to (a) deliver to GDOT a remedial action plan within ten (10) days after written notice of such DB Team Default, pursuant to Article 17.3.5 (without further demand or notice by GDOT), and (b) with the delivery of such remedial action plan, acknowledge any associated Liquidated Damages that are accruing. Where such remedial action plan has been accepted by GDOT in writing, then such forbearance period as provided herein shall be extended or abbreviated as required by such remedial action plan, subject to DB Team's diligent prosecution of the Work in accordance therewith. Any such DB Team Default shall be deemed cured upon satisfaction of the conditions set forth in such accepted remedial action plan and any Liquidated Damages shall cease to accrue upon the date of such satisfaction. Notwithstanding anything to the contrary herein, Liquidated Damages accruing during such forbearance period, as may be extended, shall not be waived by this Article 17.1.2.7 and shall be payable pursuant to the terms of this Agreement.

17.1.3 Certain Curative Actions; Status Report

17.1.3.1 If the DB Team Default consists of failure to give GDOT a required prior notice and opportunity to complete an applicable review and comment or acceptance procedure under Article 6.3 before action is taken by DB Team, such DB Team Default shall be curable only by reversing or suspending the action until the notice and review and comment or acceptance procedures are followed and completed, unless DB Team finished the action before receiving the notice of DB Team Default or unless waived by GDOT.

17.1.3.2 If the DB Team Default consists of any DB Team activity or failure to act which constitutes a change from DB Team's activities immediately prior to the DB Team Default, such DB Team Default shall be curable only by reinstating the activity as it was being performed immediately prior to the DB Team Default.

17.1.3.3 For any DB Team Default for which a Warning Notice has been delivered by GDOT to DB Team, DB Team may request from GDOT a status report as to DB Team's progress in effecting a cure, by delivering to GDOT a written request accompanied by DB Team's own report as to its progress in effecting a cure. GDOT shall provide its response within ten (10) Business Days after receipt of DB Team's written request and report. The response shall be provided solely for purposes of informing DB Team as to GDOT's view of the progress in effecting a cure for the DB Team Default, shall not constitute an admission of any fact, shall not be admissible in evidence for any purpose, shall not form the basis for any Dispute or Claim, and shall not limit in any way GDOT's right to terminate this Agreement in accordance with Article 19.3 should cure not be effected within the relevant period.

17.2 Warning Notices

17.2.1 Warning Notice Events

Without prejudice to any other right or remedy available to GDOT, GDOT may, but in no case shall be required to, deliver a written notice (a "Warning Notice") to DB Team, stating explicitly that it is a "Warning Notice" and stating in reasonable detail the matter or matters giving rise to the notice and, if applicable, amounts due from DB Team, and reminding DB Team of the implications of such notice, whenever there occurs any of the following:

17.2.1.1 Any DB Team Default under Article 17.1.1.1, 17.1.1.2, 17.1.1.7, 17.1.1.8, or 17.1.1.10;

17.2.1.2 Delay or failure to achieve any Milestone Deadline; or

17.2.1.3 Any other material DB Team Default.

17.2.2 Effect of Warning Notice on DB Team Cure Period

17.2.2.1 Any notice of a DB Team Default issued under Article 17.1 may, if it concerns a matter under Article 17.2.1, also be issued as a Warning Notice. In such case, the cure period available to DB Team, if any, shall be as set forth in Article 17.1.2.

17.2.2.2 If GDOT issues a Warning Notice under Article 17.2.1 for any DB Team Default after it issues a notice of such DB Team Default, then the cure period available to DB Team, if any, for such DB Team Default before GDOT may seek to appoint a receiver for DB Team, remove DB Team or terminate this Agreement on account of such DB Team Default shall be extended by the time period between the date the notice of such DB Team Default was issued and the date the Warning Notice is issued. No later issuance of a Warning Notice shall extend the time when GDOT may exercise any other remedy respecting such DB Team Default.

17.2.3 Other Effects of Warning Notice

17.2.3.1 The issuance of a Warning Notice shall entitle GDOT to increase the level of oversight as provided in Article 17.3.8.

17.2.3.2 The issuance of a Warning Notice may trigger a Default Termination Event as provided in Article 19.3.

17.3 Remedies for DB Team Default

17.3.1 Termination

In the event of any DB Team Default that is or becomes a Default Termination Event set forth in Article 19.3.1, GDOT may terminate this Agreement and GDOT thereupon may take control of the Work, which termination shall, among other things, automatically terminate all of DB Team's rights under Article 2, whereupon DB Team shall take all action required to be taken by DB Team under Article 19.5.

17.3.2 Remedies for Failure to Meet Safety Standards or Perform Safety Compliance

17.3.2.1 Subject to Article 17.3.2.4, if at any time DB Team fails to meet any Safety Standard or timely perform Safety Compliance or GDOT and DB Team cannot reach an agreement regarding the interpretation or application of a Safety Standard or the valid issuance of a Safety Compliance Order within a period of time acceptable to GDOT, acting reasonably, GDOT shall have the absolute right and entitlement to undertake or direct DB Team to undertake any work required to ensure implementation of and compliance with Safety Standards as interpreted or applied by GDOT or with the Safety Compliance Order.

17.3.2.2 To the extent that any work done pursuant to Article 17.3.2.1 is undertaken by GDOT and is reasonably necessary to comply with Safety Standards or perform validly issued Safety Compliance Orders, DB Team shall pay to GDOT on demand GDOT Recoverable Costs in connection with such work, and GDOT (whether it undertakes the work or has directed DB Team to undertake the work) shall have no obligation or liability to compensate DB Team for any Losses DB Team suffers or incurs as a result thereof.

17.3.2.3 To the extent that any work done pursuant to Article 17.3.2.1 is undertaken by GDOT and is not reasonably necessary to comply with Safety Standards or perform validly issued Safety Compliance Orders, GDOT shall compensate DB Team only for Losses DB Team suffers or incurs as a direct result thereof.

17.3.2.4 To the extent that any Safety Compliance Order work pursuant to Article 17.3.2.1 is undertaken by DB Team under written protest delivered prior to starting the work and it is finally determined that the Safety Compliance work was not necessary, the unnecessary work under the Safety Compliance Order shall be treated as a GDOT Change.

17.3.2.5 Notwithstanding anything to the contrary contained in the DB Documents, if in the good faith judgment of GDOT, DB Team has failed to meet any Safety Standards or perform Safety Compliance and the failure results in an Emergency or danger to persons or property, and if DB Team is not then diligently taking all necessary steps to rectify or deal with such Emergency or danger, GDOT may, without notice and without awaiting lapse of the period to cure any breach, and in addition and without prejudice to its other remedies, (but is not obligated to) (a) immediately take such action as may be reasonably necessary to rectify the

Emergency or danger, in which event DB Team shall pay to GDOT on demand the cost of such action, including GDOT Recoverable Costs, or (b) suspend Construction Work and/or close or cause to be closed any and all portions of the Project affected by the Emergency or danger. So long as GDOT undertakes such action in good faith, even if under a mistaken belief in the occurrence of such failure or existence of an Emergency or danger as a result thereof, such action shall not be deemed unlawful or a breach of this Agreement, shall not expose GDOT to any liability to DB Team and shall not entitle DB Team to any other remedy, it being acknowledged that GDOT has a high priority, paramount public interest in protecting public and worker safety at the Project and adjacent and connecting areas. GDOT's good faith determination of the existence of such a failure, Emergency or danger shall be deemed conclusive in the absence of clear and convincing evidence to the contrary. Immediately following rectification of such Emergency or danger, as determined by GDOT, acting reasonably, GDOT shall allow the Construction Work to continue or such portions of the Project to reopen, as the case may be. The foregoing shall not, however, protect GDOT from DB Team's lawful claims to indemnity or contribution for third party bodily injury or property damage arising out of any such GDOT action, if and to the extent (i) GDOT was mistaken in believing such a DB Team Default occurred, (ii) the third party liability is not insured and not required to be insured under the DB Documents, and (iii) such injury or property damage was caused by GDOT's negligence, recklessness or intentional misconduct.

17.3.3 Step-in Rights

Upon the occurrence of a DB Team Default and expiration, without full and complete cure, of the cure period, if any, available to DB Team, without necessity for a Warning Notice, and without waiving or releasing DB Team from any obligations, GDOT shall have the right, but not the obligation, for so long as such DB Team Default remains uncured by GDOT or DB Team, to pay and perform all or any portion of DB Team's obligations and the Work that are the subject of such DB Team Defaults, as well as any other then-existing breaches or failures to perform for which DB Team received prior written notice from GDOT but has not commenced diligent efforts to cure.

17.3.3.1 In connection with such action, GDOT may, to the extent and only to the extent reasonably required for or incident to curing the DB Team Default or such other breaches or failures to perform for which DB Team received prior written notice from GDOT but has not commenced and continued diligent efforts to cure:

(a) Employ security guards and other safeguards to protect the Project;

(b) Spend such sums as are reasonably necessary to employ and pay such architects, engineers, consultants and contractors and obtain materials and equipment as may be required, without obligation or liability to DB Team or any Contractors for loss of opportunity to perform the same Work or supply the same materials and equipment;

(c) Draw on and use proceeds from payment and performance bonds and other performance security to the extent available under the terms thereof to pay such sums;

(d) Execute all applications, certificates and other documents as may be required;

(e) Make decisions respecting, assume control over and continue Work as may be reasonably required;

(f) Meet with, coordinate with, direct and instruct contractors and suppliers, process invoices and applications for payment from contractors and suppliers, pay contractors and suppliers, and resolve claims of contractors, subcontractors and suppliers, and for this purpose DB Team irrevocably appoints GDOT as its attorney-in-fact with full power and authority to act for and bind DB Team in its place and stead;

(g) Take any and all other actions as may be reasonably required or incident to curing; and

(h) Prosecute and defend any action or proceeding incident to the Work undertaken.

17.3.3.2 DB Team shall reimburse GDOT on demand GDOT Recoverable Costs in connection with the performance of any act or Work authorized by this Article 17.3.3.

17.3.3.3 GDOT and any of their Authorized Representatives, contractors, subcontractors, vendor and employees shall not be liable to DB Team in any manner for any inconvenience or disturbance arising out of its entry onto the Project or Project Specific Locations in order to perform under this Article 17.3.3, unless caused by the gross negligence, recklessness, willful misconduct or bad faith of such Person. If any Person exercises any right to pay or perform under this Article 17.3.3, it nevertheless shall have no liability to DB Team for the sufficiency or adequacy of any such payment or performance, or for the manner or quality of design, or construction unless caused by the gross negligence, recklessness, willful misconduct or bad faith of such Person.

17.3.3.4 The rights under this Article 17.3.3 are subject to the right of any Surety under payment and performance bonds to assume performance and completion of all bonded work.

17.3.3.5 In the event GDOT takes action described in this Article 17.3.3 and it is later finally determined that GDOT lacked the right to do so because there did not occur a DB Team Default and expiration, without full and complete cure, of the cure period, if any, available to DB Team, then GDOT's action shall be treated as a Directive Letter for a GDOT Change.

17.3.4 Damages; Offset

17.3.4.1 Subject to Articles 17.3.10 and 17.3.11 and the provisions on Liquidated Damages set forth in Article 17.4, GDOT shall be entitled to recover any and all damages available at Law (subject to the duty at Law to mitigate damages and without duplicate recovery) on account of the occurrence of a DB Team Default, including, to the extent available at Law, (a) loss of any compensation due GDOT under the DB Documents proximately caused by the DB Team Default, (b) actual and projected costs to remedy any defective part of the Work, (c) actual and projected costs to rectify any breach or failure to perform by DB Team and/or to bring the condition of the Project to the standard it would have been in if DB Team had complied with its obligations to carry out and complete the Work in accordance with the DB Documents, (d) actual and projected costs to GDOT to terminate, take over the Project, re-procure and replace DB Team, and (e) actual and projected increases in costs to GDOT to complete the Project if not completed, together with interest thereon at the Default Interest Rate

commencing from the date any amount becomes due to GDOT until paid. DB Team shall owe any such damages that accrue after the occurrence of the DB Team Default and the delivery of notice thereof, if any, required by this Agreement regardless of whether the DB Team Default is subsequently cured.

17.3.4.2 GDOT may deduct and offset any Claim amount owing to it, provided such Claim amount has been liquidated under the process set forth under GDOT Standard Specification 105.13 "Claims for Adjustments and Disputes" or otherwise, from and against any amounts GDOT may owe to DB Team or any Affiliate pursuant to this DB Agreement; provided that GDOT shall first draw on all amounts held in respect of the Claim in the GDOT Claims Account.

17.3.4.3 If the Claim amount is not liquidated, GDOT may elect to exercise its right to direct a payment from DB Team up to the disputed portion of the Claim which payment shall be deposited into the GDOT Claims Account. Upon liquidation, the disputed portion of the Claim shall be satisfied first from the amounts held in the GDOT Claims Account, and then through GDOT's right of offset with respect to the liquidated Claim amounts.

17.3.5 Remedial Action Plan Delivery and Implementation

17.3.5.1 Upon the occurrence of a DB Team Default, GDOT shall have the right to demand that DB Team shall, within ten (10) days after written notice of such DB Team Default, be required to prepare and submit a remedial action plan for GDOT acceptance. The remedial action plan shall set forth a schedule and specific actions to be taken by DB Team to improve its performance and cure the DB Team Default. Such actions may include improvements to DB Team's quality management practices, plans and procedures, revising and restating components of the Management Plans, changes in organizational and management structure, increased monitoring and inspections, changes in Key Personnel and other important personnel, replacement of Contractors, corrective measures necessary to expedite the progress of construction and to demonstrate ability to achieve any Milestone Deadline including, without limitation, (i) working additional shifts or overtime and/or (ii) supplying additional manpower, equipment and facilities, and delivery of security to GDOT. Notwithstanding the aforementioned, GDOT shall have no obligation to make any demand as presented herein, nor shall DB Team be afforded the right to submit same prior to the exercise of any right or remedy by GDOT as a result of a DB Team Default. DB Team's failure to diligently prosecute the Work in accordance with any such accepted remedial action plan shall be deemed a further DB Team Default.

17.3.6 Performance Security

17.3.6.1 Upon the occurrence of a DB Team Default and expiration, without full and complete cure, of the applicable cure period, if any, under Article 17.1.2, without necessity for a Warning Notice, and without waiving or releasing DB Team from any obligations, and subject to Article 16.2.4 if applicable, GDOT shall be entitled to make demand upon and enforce any bond, and make demand upon, draw on and enforce and collect any guaranty or other payment or performance security available to GDOT under this Agreement with respect to the DB Team Default in question in any order in GDOT's sole discretion. Where access to a bond or other payment or performance security is to satisfy damages owing, GDOT shall be entitled to make demand, draw, enforce and collect regardless of whether the DB Team Default is cured subsequent to such draw. GDOT will apply the proceeds of any such action to the satisfaction

of DB Team's obligations under the DB Documents, including payment of amounts due GDOT. The foregoing does not limit or affect any other right of GDOT to make demand upon and enforce any bond, and make demand upon, draw on and enforce and collect any guaranty or other payment or performance security, immediately after GDOT are entitled to do so under the bond, guaranty or other payment or performance security.

17.3.7 Suspension of Work

17.3.7.1 Upon GDOT's delivery of notice of DB Team Default for any of the following breaches or failures to perform and DB Team's failure to fully cure and correct, within the applicable cure period, if any, available to DB Team under Article 17.1.2, GDOT shall have the right and authority to suspend any affected portion of the Work by written order to DB Team:

(a) Performance of Nonconforming Work;

(b) Failure to comply with any Law or Governmental Approval (including failure to handle, preserve and protect archeological, paleontological or historic resources, or failure to handle Hazardous Materials, in accordance with applicable Laws and Governmental Approvals);

(c) Certain failures to remove and replace personnel as set forth in Article 10.6.3;

(d) Failure to provide proof of required insurance coverage as set forth in Article 16.1.2.4(c);

(e) Failure to carry out and comply with Directive Letters;

(f) Failure to satisfy any condition to commencement of construction set forth in Article 7.6; and.

(g) Failure to maintain, extend or replace performance and payment security required under the Agreement, including any P&P Bonds, unless a drawing has been made under same in the amount of the required coverage provided for in Article 16.2 and the proceeds of such drawing are held by GDOT.

GDOT will lift the suspension order promptly after DB Team fully cures and corrects the applicable breach or failure to perform.

17.3.7.2 In addition, GDOT shall have the right and authority to suspend any affected portion of the Work by written notice to DB Team for the following reasons:

(a) To comply with any court order or judgment (although it may qualify as a Compensation Event under clause (g) of the definition of "Compensation Event" or a Relief Event under clause (m) of the definition of "Relief Event");

(b) GDOT's performance of data recovery respecting archeological, paleontological or cultural resources (although it may qualify as a Relief Event under clause (j) of the definition of "Relief Event");

(c) The existence of conditions unsafe for workers, other Project personnel or the general public, including certain failures to comply with Safety Standards or perform Safety Compliance as set forth in Article 17.3.2.5; or

(d) DB Team has failed to (i) pay in full when due sums owing any Contractor for services, materials or equipment, except only for retainage provided in the relevant Contract and amounts in dispute, or (ii) deliver any certificate, release, certified payroll or affidavit of wages paid required with any Payment Request or required under Article 16.2.5.1.

17.3.7.3 DB Team shall promptly comply with any such written suspension order, even if DB Team disputes the grounds for suspension. DB Team shall promptly recommence the Work upon receipt of written notice from GDOT directing DB Team to resume Work.

17.3.7.4 In addition to the protections from liability under Article 17.3.2.5, GDOT shall have any liability to DB Team, and DB Team shall have no right to a Relief Event or Compensation Event, in connection with any suspension properly founded on any of the other grounds set forth in this Article 17.3.7 (except potential Relief Events or Compensation Events in the case of suspensions under Articles 17.3.7.2(a) and 17.3.7.2(b)). If GDOT orders suspension of Work on one of the foregoing grounds but it is finally determined under the process set forth under GDOT Standard Specification 105.13 "Claims for Adjustments and Disputes" that such grounds did not exist, or if GDOT orders suspension of Work for any other reason, it shall be treated as a Directive Letter for a GDOT Change, except as provided in Article 17.3.2.5.

17.3.8 Increased Oversight, Testing, and Inspection

17.3.8.1 Upon GDOT's delivery of notice of DB Team Default for any of the following breaches or failures to perform and DB Team's failure to fully cure and correct, within the applicable cure period, if any, available to DB Team under Article 17.1.2, GDOT shall have the right and authority to suspend any affected portion of the Work by written order to DB Team.

17.3.8.2 If GDOT cannot confirm that: (a) a portion of the Design Work or the Construction Work is in accordance with the requirements of the DB Documents due to a lack of documented inspection or testing by DB Team as required under the DB Documents, or (b) DB Team is implementing, revising, or updating a testing and inspection plan in accordance with the DB Documents for the Design Work or the Construction Work, GDOT shall have the right but not the obligation to inform DB Team that increased monitoring, inspection, sampling, measuring, testing and oversight should be provided. If the increased monitoring, inspection, sampling, measuring, testing and oversight reveal: (i) a failure to perform such Work in accordance with the Quality Management Plan, (ii) that the Quality Management Plan does not comply with the DB Documents, or (iii) that such Work is not in accordance with the DB Documents, DB Team shall be responsible for the costs of such increased monitoring, inspection, sampling, measuring, testing and oversight as described in Article 17.3.8. DB Team shall correct such deficiencies and the increased monitoring, inspection, sampling, measuring, testing and oversight will continue until those deficiencies have been corrected. If such Work was performed, inspected and documented by DB Team in accordance with the DB Documents, the costs of the increased monitoring, inspection, sampling, measuring, testing and oversight shall be borne by GDOT.

17.3.8.3 If GDOT increases the level of monitoring, inspection, sampling, measuring, testing, auditing and oversight under Article 17.3.8.1 and Liquidated Damages are not provided for under this Agreement in connection with such action, then DB Team shall pay and reimburse GDOT within thirty (30) days after receipt of written demand and reasonable supporting documentation for all increased costs and fees GDOT incurs in connection with such action, including GDOT Recoverable Costs.

17.3.8.4 The foregoing does not preclude GDOT, at its sole discretion and expense, from increasing its level of monitoring, inspection, sampling, measuring, testing, auditing and oversight at other times.

17.3.9 Other Rights and Remedies

Subject to Articles 17.3.11, 17.4.5.2 and 19.9, GDOT shall also be entitled to exercise any other rights and remedies available under this Agreement or any other DB Documents, or available at law or in equity.

17.3.10 Cumulative, Non-Exclusive Remedies

Subject to Articles 17.3.11, 17.4.5.2 and 19.9, each right and remedy of GDOT hereunder shall be cumulative and shall be in addition to every other right or remedy provided herein or now or hereafter existing at Law or in equity or by statute or otherwise, and the exercise or beginning of the exercise by GDOT of any one or more of any of such rights or remedies shall not preclude the simultaneous or later exercise by GDOT of any or all other such rights or remedies.

17.3.11 Limitation on Consequential Damages

17.3.11.1 Notwithstanding any other provision of the DB Documents and except as set forth in Article 17.3.11.2, to the extent permitted by applicable Law, DB Team shall not be liable for punitive damages or special, indirect or incidental, or consequential damages, whether arising out of breach of this Agreement, tort (including negligence) or any other theory of liability, and GDOT releases DB Team from any such liability, other than for Liquidated Damages for delay, as provided pursuant to this Agreement or otherwise to the extent recoverable from insurance.

17.3.11.2 The foregoing limitation on DB Team's liability for consequential damages shall not apply to or limit any right of recovery GDOT may have respecting the following:

(a) Losses (including defense costs) to the extent (i) covered by the proceeds of insurance required to be carried pursuant to Article 16.1, (ii) covered by the proceeds of insurance actually carried by or insuring DB Team under policies solely with respect to the Project and the Work, regardless of whether required to be carried pursuant to Article 16.1, or (iii) DB Team is deemed to have self-insured the Loss pursuant to Article 16.1.4.3;

(b) Losses arising out of fraud, criminal conduct, intentional misconduct (which does not include any intentional DB Team Default), recklessness, bad faith or gross negligence on the part of DB Team or Design- Build Contractor or any Affiliate of either;

(c) DB Team's obligation to pay Liquidated Damages in accordance with Article 17.4 or any other provision of the DB Documents;

(d) Losses arising out of DB Team Releases of Hazardous Materials;

(e) Reserved;

(f) Amounts DB Team may be obligated to reimburse to GDOT or that are otherwise due from DB Team to GDOT under the express provisions of the DB Documents, including GDOT Recoverable Costs;

(g) Interest, late charges, fees, transaction fees and charges, penalties and similar charges that the DB Documents expressly state are due from DB Team to GDOT; and

(h) Any credits, deductions or offsets that the DB Documents expressly provide to GDOT against amounts owing DB Team.

17.4 Liquidated Damages

17.4.1 Liquidated Damages for Delayed Substantial Completion or Maintenance Acceptance

17.4.1.1 DB Team shall be liable for and pay to GDOT Liquidated Damages with respect to any failure to achieve Substantial Completion by the Substantial Completion Deadline, or any failure to achieve Maintenance Acceptance by the Maintenance Acceptance Deadline, as the same may be extended pursuant to this Agreement, or for any other breach of the requirements of the DB Documents as set forth pursuant to Section 1.2 of Exhibit 18. Such liability shall apply even though (a) a cure period remains available to DB Team under Article 17.1.2 or (b) cure occurs. The amounts of such Liquidated Damages are set forth in Exhibit 18. Such Liquidated Damages shall commence on the Substantial Completion Deadline or the Maintenance Acceptance Deadline, as applicable, or upon the date of breach for each such incident based default pursuant to Section 1.2 of Exhibit 18, as the same may be extended pursuant to this Agreement, and shall continue to accrue until the date of Substantial Completion, the date of Maintenance Acceptance, the cure of any such incident based breach, all as applicable, or until termination of this Agreement.

17.4.1.2 Reserved

17.4.2 Reserved.

17.4.3 Acknowledgements Regarding Liquidated Damages

DB Team further agrees and acknowledges that:

17.4.3.1 In the event that DB Team fails to achieve Substantial Completion by the Substantial Completion Deadline or Maintenance Acceptance by the Maintenance Acceptance Deadline, GDOT will incur substantial damages;

17.4.3.2 Such damages are incapable of accurate measurement and difficult to prove for the reasons stated in this Article 17.4;

17.4.3.3 As of the Effective Date, the amounts of Liquidated Damages under this Article 17.4 represent good faith estimates and evaluations by the Parties as to the actual potential damages that GDOT would incur as a result of late Substantial Completion or late Maintenance Acceptance, and do not constitute a penalty or to otherwise operate as a deterrent for the breach of any obligations of DB Team under this Agreement;

17.4.3.4 The Parties have agreed to such Liquidated Damages in order to fix and limit DB Team's costs and to avoid later Disputes over what amounts of damages are properly chargeable to DB Team;

17.4.3.5 Such sums are reasonable in light of the anticipated or actual harm caused by delayed Substantial Completion or delayed Maintenance Acceptance, the difficulties of the proof of loss, and the inconvenience or infeasibility of otherwise obtaining an adequate remedy;

17.4.3.6 DB Team acknowledges that such Liquidated Damages are reasonable, as determined as of the Effective Date, in light of the respective injuries and damages that may be caused by DB Team's breach and given that such injuries and damages, which include but shall not be limited to, public inconvenience, increased administration and oversight by GDOT (and any other related agencies), and other damages to the general public, GDOT (and other related agencies); and

17.4.3.7 Such Liquidated Damages are not intended to, and do not, liquidate DB Team's liability under the indemnification provisions of Article 16.5, even though third party claims against Indemnified Parties may arise out of the same event, breach or failure that gives rise to such Liquidated Damages.

17.4.4 Payment; Satisfaction; Waiver

17.4.4.1 DB Team shall pay any Liquidated Damages owing under this Article 17.4 within twenty (20) days after GDOT delivers to DB Team GDOT's invoice or demand therefor, such invoice or demand to be issued not more often than monthly. Liquidated damages shall be due and payable to GDOT without right of offset, deduction, reduction or other charge, except as provided in Article 17.6.3.

17.4.4.2 GDOT shall have the right to deduct and offset Liquidated Damages from any amounts owing DB Team to the extent provided in Article 17.3.4. GDOT also shall have the right to draw on any bond, certificate of deposit, or other security provided by DB Team pursuant to this Agreement, to satisfy Liquidated Damages not paid when due.

17.4.4.3 Permitting or requiring DB Team to continue and finish the Work or any part thereof after the Substantial Completion Deadline or Maintenance Acceptacne Deadline shall not act as a waiver of GDOT's right to receive Liquidated Damages hereunder or any rights or remedies otherwise available to GDOT.

17.4.5 Non-Exclusive Remedy

17.4.5.1 Each item of Liquidated Damages provided under this Article 17.4 is in addition to, and not in substitution for, any other item of Liquidated Damages assessed under this Article 17.4.

17.4.5.2 GDOT's right to, and imposition of, Liquidated Damages are in addition, and without prejudice, to any other rights and remedies available to GDOT under the DB Documents, at law or in equity respecting the breach, failure to perform or DB Team Default that is the basis for the Liquidated Damages or any other breach, failure to perform or DB Team Default, except for recovery of the monetary damage for delay that the Liquidated Damages are intended to compensate and for which Liquidated Damaged shall be the only amount recoverable on account of delay damages.

17.5 Default by GDOT; Cure Periods

17.5.1 GDOT Default

GDOT shall, subject to any applicable cure period as set forth in Article 17.5.2 below, be in breach under this Agreement upon the occurrence of any one or more of the following events or conditions (each a "GDOT Default"):

17.5.1.1 GDOT fails to make any payment due DB Team under this Agreement within thirty (30) days of the date that any such payment shall be due;

17.5.1.2 Any representation or covenant made by GDOT in this Agreement is false or materially misleading or materially inaccurate when made or omits material information when made;

17.5.1.3 GDOT fails to observe or perform any covenant, agreement, term or condition required to be observed or performed by GDOT under the DB Documents;

17.5.1.4 GDOT makes an assignment other than as permitted pursuant to Article 21.3; or

17.5.1.5 GDOT or other State Governmental Entity confiscates or appropriates the Project or any other material part of DB Team's Interest, excluding a Termination for Convenience or any other exercise of a right of termination set forth in this Agreement.

17.5.2 Cure Periods

GDOT shall have the following cure periods with respect to the any of the conditions set forth in Article 17.5.1 above:

17.5.2.1 Respecting a GDOT Default under Article 17.5.1.1, a period of thirty (30) days after DB Team delivers to GDOT written notice of the GDOT Default; and

17.5.2.2 Respecting a GDOT Default under Article 17.5.1.2, 17.5.1.3, or 17.5.1.5, a period of sixty (60) days after DB Team delivers to GDOT written notice of the GDOT Default; provided that (a) if the GDOT Default is of such a nature that the cure cannot with diligence be completed within such time period and GDOT has commenced meaningful steps to cure immediately after receiving the default notice, GDOT shall have such additional period of time, up to a maximum cure period of one hundred and eighty (180) days, as is reasonably necessary to diligently effect cure, and (b) as to Article 17.5.1.2, cure will be regarded as complete when the adverse effects of the breach are cured.

17.6 DB Team Remedies for GDOT Default

17.6.1 Termination and Suspension

Subject to Article 19.9, DB Team will have the right to suspend performance of the Work on account of a GDOT Default subject to any applicable notice and cure periods as set forth in Article 17.5.2. Further, DB Team may upon written notice of not less than fifteen (15) days to GDOT following expiration of such applicable cure period, where such GDOT Default is continuing, exercise the right to terminate this Agreement and recover termination damages as more particularly set forth in, and subject to the terms and conditions of, Article 19.4.

17.6.2 Damages and Other Remedies

DB Team shall have and may exercise the following remedies upon the occurrence of a GDOT Default and expiration, without cure, of the applicable cure period:

17.6.2.1 If DB Team does not terminate this Agreement, then, subject to Article 17.6.4, DB Team may treat the GDOT Default as a Compensation Event on the terms and conditions set forth in Article 13.2 and GDOT shall pay the full Compensation Amount and interest in accordance with Articles 13.2.6 and 13.2.7;

17.6.2.2 If the GDOT Default is a failure to pay when due any undisputed portion of a progress payment owing under a Supplemental Agreement and GDOT fails to cure such GDOT Default within thirty (30) days after receiving from DB Team written notice thereof, DB Team shall be entitled to suspend the Work under the Supplemental Agreement until the default is cured; and

17.6.2.3 Subject to Articles 17.6.4 and 19.9, DB Team also shall be entitled to exercise any other remedies available under this Agreement or at Law or in equity, including offset rights to the extent and only to the extent available under Article 17.6.3. Subject to Articles 17.6.4 and 19.9, each right and remedy of DB Team hereunder shall be cumulative and shall be in addition to every other right or remedy provided herein or now or hereafter existing at Law or in equity or by statute or otherwise, and the exercise or beginning of the exercise by DB Team of any one or more of any of such rights or remedies shall not preclude the simultaneous or later exercise by DB Team of any or all other such rights or remedies.

17.6.3 Offset Rights

DB Team may deduct and offset any Claim amount owing to it, provided such Claim amount has been liquidated through GDOT Standard Specification 105.13 “Claims for Adjustments and Disputes” as provided in Article 17.7 or otherwise, from and against any amounts DB Team may owe to GDOT pursuant hereto.

17.6.4 Limitations on Remedies

17.6.4.1 Notwithstanding any other provision of the DB Documents and except as forth in Article 17.6.4.2, to the extent permitted by applicable Law, GDOT shall not be liable for punitive damages or any indirect, incidental or consequential damages, whether arising out of breach of this Agreement or any DB Documents, tort (including negligence) or any other theory of liability, and DB Team releases GDOT from any such liability.

17.6.4.2 The foregoing limitation on GDOT's liability for consequential damages shall not apply to or limit any right of recovery DB Team may have respecting the following:

(a) Losses arising out of fraud, criminal conduct, intentional misconduct (which does not include any intentional GDOT Default), recklessness, bad faith or gross negligence on the part of GDOT;

(b) Losses arising out of GDOT Release(s) of Hazardous Materials or Pre-Existing Hazardous Materials;

(c) Any amounts GDOT may owe or be obligated to reimburse under the express provisions of this Agreement for Compensation Events or events of termination;

(d) Any other specified amounts GDOT may owe or be obligated to reimburse to DB Team under the express provisions of the DB Documents;

(e) Interest and charges that the DB Documents expressly state are due from GDOT to DB Team; and

(f) Any credits, deductions or offsets that the DB Documents expressly provide to DB Team against amounts owing GDOT.

17.6.4.3 The measure of compensation available to DB Team as set forth in this Agreement for a Compensation Event or an event of termination shall constitute the sole and exclusive monetary relief and damages available to DB Team from the State or GDOT arising out of or relating to such event; and DB Team irrevocably waives and releases any right to any other or additional damages or compensation from the State or GDOT. No award of compensation or damages shall be duplicative.

17.6.4.4 Without limiting the effect of Article 17.6.4.3, in the event GDOT wrongfully withholds an acceptance or consent required under this Agreement, or wrongfully issues an objection to or disapproval of a Submittal or other matter under this Agreement, DB Team's sole remedies against GDOT shall be extensions of time to the extent provided in Article 13.1 for a Relief Event and damages to the extent provided in Article 13.2 for a Compensation Event.

17.6.5 Procedure for Payment of Judgments

Promptly after any final, non-appealable order or judgment awarding compensation or damages to DB Team, GDOT shall institute payment procedures as set forth in applicable Law.

17.7 Reserved

Article 18 RESERVED

Article 19 TERMINATION

19.1 Termination for Convenience

19.1.1 GDOT may terminate this Agreement, if GDOT determines, in its sole discretion, that a termination is in GDOT's best interest (a "Termination for Convenience"). Termination of this Agreement shall not relieve DB Team or any Guarantor or Surety of its obligation for any claims arising prior to termination.

19.1.2 GDOT may exercise Termination for Convenience by delivering to DB Team a written notice of termination for Convenience specifying the election to terminate. Termination for Convenience shall be effective as and when provided in Exhibit 20.

19.1.3 In the event of a Termination for Convenience, DB Team will be entitled to compensation determined in accordance with Exhibit 20. Payment will be due and payable as and when provided in Exhibit 20.

19.1.4 If GDOT terminates this Agreement on grounds or in circumstances beyond GDOT's termination rights specifically set forth in this Agreement, such termination shall be deemed a Termination for Convenience for the purpose of determining the Termination Compensation due.

19.2 Reserved

19.3 Termination for DB Team Default

19.3.1 DB Team Defaults Triggering GDOT Termination Rights

The following DB Team Defaults (each a "Default Termination Event"), and no other DB Team Defaults, shall entitle GDOT, at its sole election, to terminate this Agreement, effective immediately upon delivery of written notice of termination to DB Team. DB Team agrees and acknowledges and stipulates that any of the following DB Team Defaults would result in material and substantial harm to GDOT's rights and interests under this Agreement and therefore constitute a material DB Team Default justifying termination if not cured within the applicable cure period, if any.

19.3.1.1 The DB Team fails to achieve Substantial Completion by the Substantial Completion Deadline, as the same may be extended pursuant to this Agreement;

19.3.1.2 There occurs any other DB Team Default for which GDOT issues a Warning Notice under Article 17.2 or 17.3, and such DB Team Default is not fully and completely cured within the applicable cure period, if any, set forth in Article 17.2.2.1 or 17.3;

19.3.1.3 There occurs any DB Team Default under Article 17.1.1.11 or 17.1.1.12; or

19.3.1.4 The DB Team fails to diligently prosecute and adhere to the requirements of any remedial action plan as provided and accepted by GDOT pursuant to Article 17.3.5.

19.3.2 Compensation to DB Team

If GDOT issues notice of termination of this Agreement due to a Default Termination Event, or if DB Team terminates this Agreement on grounds or in circumstances beyond DB Team's termination rights specifically set forth in this Agreement, DB Team will be entitled to

compensation to the extent, and only to the extent, provided in Exhibit 20. Payment shall be due and payable as and when provided in Exhibit 20.

19.3.3 Finality

If GDOT issues notice of termination of this Agreement due to a Default Termination Event, termination shall be effective and final immediately upon delivery of written notice as provided in Article 19.3.1 regardless of whether GDOT is correct in determining that GDOT has the right to terminate for DB Team Default. In the event it is determined that GDOT lacked such right, then such termination shall be treated as a Termination for Convenience as provided in Article 19.1.4 for the purpose of determining the Termination Compensation due.

19.4 Termination for GDOT Default, Suspension of Work, Force Majeure Event, or Materially Delayed Notice to Proceed

19.4.1 In the event of a material GDOT Default under Article 17.5.1.1 (failure to pay money due) that remains uncured following notice and expiration of the applicable cure period under Article 17.5.2, DB Team may deliver to GDOT a further written notice setting forth such GDOT Default and warning GDOT that DB Team may elect to terminate this Agreement and if GDOT does not cure such GDOT Default within sixty (60) days after the delivery of such notice with respect to a GDOT Default under Article 17.5.1.1. GDOT may avoid termination by effecting cure within such sixty (60) day period. Failing such cure, DB Team shall have the right to terminate this Agreement, effective immediately upon delivery of written notice of termination to GDOT. In the event of such termination, DB Team will be entitled to compensation determined in accordance with Exhibit 20. Payment shall be due and payable as and when provided in Exhibit 20. Any Dispute arising out of the determination of such compensation shall be resolved according to GDOT Standard Specification 105.13 “Claims for Adjustments and Disputes.”

19.4.2 In the event (i) GDOT orders DB Team to suspend Work on all or any material portion of the Project for a reason other than those set forth in Article 17.3.7.1, or (ii) as a result of a Force Majeure Event, and such suspension of Work continues for a period of one hundred and eighty (180) consecutive days or more, DB Team shall have the right to terminate this Agreement, effective immediately upon delivery of written notice of termination to GDOT. In the event of such termination, DB Team will be entitled to compensation determined in accordance with Exhibit 20. Payment shall be due and payable as and when provided in Exhibit 20. Any Dispute arising out of the determination of such compensation shall be resolved according to GDOT Standard Specification 105.13 “Claims for Adjustments and Disputes.”

19.4.3 In the event GDOT, due to no fault of a DB Team-Related Entity or other than because the NEPA Finality Date has not occurred, does not issue NTP 1, NTP 2, or NTP 3 within three hundred and sixty five (365) days after the anticipated issuance date set forth in Article 3.3, DB Team shall have the right to terminate this Agreement, effective immediately upon delivery of written notice of termination to GDOT. In the event of such termination, DB Team will be entitled to compensation determined in accordance with Exhibit 20. Payment shall be due and payable as and when provided in Exhibit 20. Any Dispute arising out of the determination of such compensation shall be resolved according to GDOT Standard Specification 105.13 “Claims for Adjustments and Disputes.”

19.4.4 If DB Team issues notice of termination of this Agreement due to a material GDOT Default under Article 17.5.1.1, termination shall be effective and final immediately upon delivery as provided in Article 19.4.1 regardless of whether DB Team is correct in determining that it has the right to terminate for such GDOT Default. In the event it is determined that DB Team lacked such right, then such termination shall be treated as a termination due to material DB Team Default and Article 19.3.2 shall govern the measure of the Termination Compensation.

19.5 Termination Procedures and Duties

Upon expiration of the Term or any earlier termination of this Agreement for any reason, including due to GDOT Default, the provisions of this Article 19.5 shall apply. DB Team shall timely comply with such provisions independently of, and without regard to, the timing for determining, adjusting, settling and paying any amounts due DB Team or GDOT on account of termination.

19.5.1 In any case where notice of termination precedes the effective Early Termination Date:

19.5.1.1 DB Team shall continue performing the Work in accordance with, and without excuse from, all the standards, requirements and provisions of the DB Documents, and without curtailment of services, quality and performance;

19.5.1.2 Reserved

19.5.1.3 Reserved.

19.5.1.4 Within three (3) days after receipt of a notice of termination, DB Team shall meet and confer with GDOT for the purpose of developing an interim transition plan for the orderly transition of Work, demobilization and transfer of the Project control to GDOT. The Parties shall use diligent efforts to complete preparation of the interim transition plan within fifteen (15) days after the date DB Team receives the notice of termination. The Parties shall use diligent efforts to complete a final transition plan within thirty (30) days after such date. The transition plan shall be in form and substance acceptable to GDOT in its good faith discretion and shall include and be consistent with the other provisions and procedures set forth in this Article 19.5, all of which procedures DB Team shall immediately follow, regardless of any delay in preparation or acceptance of the transition plan.

19.5.2 On the Termination Date, or as soon thereafter as is possible, DB Team shall relinquish and surrender full control and possession of the Project to GDOT, and shall cause all persons and entities claiming under or through DB Team to do likewise, in at least the condition required by the Termination Turnover Requirements.

19.5.3 On the later of the Termination Date or the date DB Team relinquishes full control and possession, GDOT shall assume responsibility, at its expense, for the Project, subject to any rights to damages that GDOT has against DB Team where the termination is due to a Default Termination Event.

19.5.4 Reserved.

19.5.5 Reserved.

19.5.6 Within thirty (30) days after notice of termination is delivered, DB Team shall provide GDOT with true and complete list of all materials, goods, machinery, equipment, parts, supplies and other property in inventory or storage (whether held by DB Team or any person or entity on behalf of or for the account of DB Team) for use in or respecting the Work or the Project, or on order or previously completed but not yet delivered from Suppliers for use in or respecting the Work or the Project. In addition, on or about the Termination Date, DB Team shall transfer title and deliver to GDOT or GDOT's Authorized Representative, through bills of sale or other documents of title, as directed by GDOT, all such materials, goods, machinery, equipment, parts, supplies and other property.

19.5.7 DB Team shall take all action that may be necessary, or that GDOT may direct, for the protection and preservation of the Project, the Work and such materials, goods, machinery, equipment, parts, supplies and other property.

19.5.8 On or about the Termination Date, DB Team shall execute and deliver to GDOT the following, together with an executed bill of sale or other written instrument, in form and substance acceptable to GDOT, acting reasonably, assigning and transferring to GDOT all of DB Team's right, title and interest in and to the following:

19.5.8.1 All completed or partially completed drawings (including plans, elevations, sections, details and diagrams), specifications, designs, design documents, as-built and record plans, surveys, and other documents and information pertaining to the design or construction of the Project or the Utility Adjustments;

19.5.8.2 All samples, borings, boring logs, geotechnical data and similar data and information relating to the Project;

19.5.8.3 All books, records, reports, test reports, studies and other documents of a similar nature relating to the Work, the Project;

19.5.8.4 All data and information relating to the use of the Project, including all studies, reports, and other information provided that the transfer of any Intellectual Property shall be subject to Articles 22.4; and

19.5.8.5 All other work product and Intellectual Property used or owned by DB Team or any Affiliate relating to the Work, the Project, provided that the transfer of any Intellectual Property shall be subject to Articles 22.4.

19.5.9 Reserved.

19.5.10 On or about the Termination Date, DB Team shall execute and deliver to GDOT a written assignment, in form and substance acceptable to GDOT, acting reasonably, of all DB Team's right, title and interest in and to all warranties, claims and causes of action held by DB Team against third parties in connection with the Project or the Work.

19.5.11 DB Team shall otherwise assist GDOT in such manner as GDOT may require prior to and for a reasonable period following the Termination Date to ensure the orderly transition of the Project and its management to GDOT.

19.6 Reserved

19.7 Contracts and Agreements

19.7.1 Regardless of GDOT's prior actual or constructive knowledge thereof, no contract or agreement to which DB Team is a party (unless GDOT is also a party thereto) as of the Termination Date shall bind GDOT, unless GDOT elects to assume such contract or agreement in writing. Except in the case of GDOT's express written assumption, no such contract or agreement shall entitle the contracting party to continue performance of work or services respecting the Project following DB Team's relinquishment to GDOT of possession and control of the Project, or to any claim, legal or equitable, against GDOT.

19.8 Liability After Termination; Final Release

19.8.1 No termination of this Agreement shall excuse either Party from any liability arising out of any default as provided in this Agreement that occurred prior to termination. Notwithstanding the foregoing, any termination of this Agreement shall automatically extinguish any Claim of DB Team to payment of Compensation Amounts for adverse cost and revenue impacts accruing after the Early Termination Date from Compensation Events that occurred prior to termination.

19.8.2 If this Agreement is terminated under Article 19.1, 19.3.1, 19.4, or 19.11, then GDOT's payment to DB Team of the amounts required thereunder (if any) shall constitute full and final satisfaction of, and upon payment GDOT shall be forever released and discharged from, any and all Claims, causes of action, suits, demands and Losses, known or unknown, suspected or unsuspected, that DB Team may have against GDOT arising out of or relating to this Agreement or termination thereof, or the Project, are unresolved at the time of such payment and are not related to termination or Termination Compensation. Upon such payment, DB Team shall execute and deliver to GDOT all such releases and discharges as GDOT may reasonably require to confirm the foregoing, but no such written release and discharge shall be necessary to give effect to the foregoing satisfaction and release.

19.9 Exclusive Termination Rights

This Article 19, together with the express provisions on termination set forth in Articles 17.3.1, and 17.6.1, contain the entire and exclusive provisions and rights of GDOT and DB Team regarding termination of this Agreement, and any and all other rights to terminate at law or in equity are hereby waived to the maximum extent permitted by Law.

19.10 Access to Information

DB Team shall conduct all discussions and negotiations to determine any Termination Compensation, and shall share with GDOT all data, documents and information pertaining thereto, on an Open Book Basis.

19.11 Termination by Court Ruling

19.11.1 Except in the circumstances described in Exhibit 20, Termination by Court Ruling means, and becomes effective upon, (a) issuance of a final order by a court of competent jurisdiction to the effect that this Agreement is void and/or unenforceable or impossible to perform in its entirety, (b) issuance of a final order by a court of competent jurisdiction upholding the binding effect on DB Team or GDOT of a Change in Law that causes impossibility of performance of a fundamental obligation by DB Team or GDOT under the DB

Documents or impossibility of exercising a fundamental right of DB Team or GDOT under the DB Documents, (c) occurrence of the circumstances described in Article 24.13.2, or (d) issuance of a final order by a court of competent jurisdiction to the effect that a material provision under the Estate for Years, Intergovernmental Agreement or the DB Documents is void and/or unenforceable so as to deprive DB Team of its ability to exercise a fundamental right granted to DB Team under the DB Documents and such inability resulting from such order cannot be otherwise remedied through a Compensation Event, Relief Event or other contractual remedy. The final court order shall be treated as the notice of termination.

19.11.2 Once Termination by Court Ruling becomes effective, GDOT and DB Team shall cooperate to implement Articles 19.5, 19.8, and 19.9.

19.11.3 Notwithstanding Article 19.11.2, if a Termination by Court Ruling occurs, DB Team shall be entitled to compensation to the extent, and only to the extent, provided in Exhibit 20. Payment shall be due and payable as and when provided in Exhibit 20. Any Dispute arising out of the determination of such compensation shall be resolved according to GDOT Standard Specification 105.13 "Claims for Adjustments and Disputes."

Article 20 RESERVED

Article 21 ASSIGNMENT AND TRANSFER

21.1 Restrictions on Assignment, Subletting and Other Transfers

21.1.1 DB Team shall not voluntarily or involuntarily sell, assign, convey transfer, pledge, mortgage or otherwise encumber the DB Team's Interest or any portion thereof without GDOT's prior written acceptance (including under any Direct Agreement), except:

21.1.1.1 To any entity that is under the same ultimate management control as DB Team.

21.1.2 DB Team shall not grant any other special occupancy or use of the Project to any other Person that is not in the ordinary course of DB Team performing the Work, without GDOT's prior written acceptance.

21.1.3 Any sale, assignment, conveyance, transfer, pledge, mortgage, encumbrance, or grant of other special occupancy or use in violation of this provision shall be null and void *ab initio* and GDOT may, by Warning Notice, declare any such attempted action to be a material DB Team Default.

21.2 Standards and Procedures for GDOT Acceptance

21.2.1 Where GDOT's prior acceptance is required for a proposed sale, assignment, conveyance, transfer, pledge, mortgage, encumbrance, sublease or grant of other special occupancy or use, or for any proposed Change of Control, GDOT may withhold or condition its acceptance in its sole discretion. Any such decision of GDOT to withhold consent shall be final, binding and not subject to GDOT Standard Specification 105.13 "Claims for Adjustments and Disputes."

21.2.2 Thereafter, GDOT shall not unreasonably withhold its acceptance thereto. Among other reasonable factors and considerations, it shall be reasonable for GDOT to withhold its acceptance if:

21.2.2.1 DB Team fails to demonstrate to GDOT's reasonable satisfaction that the proposed assignee, sublessee, grantee or transferee, or the proposed transferee of rights and/or equity interests that would amount to a Change of Control (for purposes of these Articles 21.2 through 21.5, collectively the "Transferee"), and its proposed contractors (a) have the financial resources, qualifications and experience to timely perform DB Team's obligations under the DB Documents and Principal Project Documents and (b) are in compliance with GDOT's rules, regulations and adopted written policies regarding organizational conflicts of interest;

21.2.2.2 Less than all of DB Team's Interest is proposed to be assigned, conveyed, transferred, pledged, mortgaged, encumbered, or granted; or

21.2.2.3 At the time of the proposed sale, assignment, conveyance, transfer, pledge, mortgage, encumbrance, sublease or grant of other special occupancy or use requiring GDOT's prior acceptance, or of any proposed Change of Control, there exists any uncured DB Team Default or any event or circumstance that with the lapse of time, the giving of notice or both would constitute a DB Team Default, unless GDOT receives from the proposed Transferee assurances of cure and performance acceptable to GDOT in its good faith discretion.

21.2.3 GDOT will accept or disapprove within thirty (30) days after it receives from DB Team a Submittal consisting of a request for acceptance together with (a) a reasonably detailed description of the proposed transaction, (b) such information, evidence and supporting documentation as GDOT may request concerning the identity, financial resources, qualifications, experience and potential conflicts of interest of the proposed Transferee and its proposed contractors and (c) such evidence of organization and authority, and such incumbency certificates, certificates regarding debarment or suspension, and other certificates, representations and warranties as GDOT may reasonably request. GDOT will evaluate the identity, financial resources, qualifications, experience and potential conflicts of interest using the same standards and criteria that it is then currently applying, or if there is no current application, then the same standards and criteria it most recently applied, to the evaluation of Persons responding to GDOT requests for qualifications for concession or similar agreements for comparable projects and facilities.

21.2.4 If for any reason GDOT does not act within such thirty (30) day period, or any extension thereof by mutual agreement of the Parties, then the provisions of Article 6.3.4.2 shall apply.

21.3 Assignment by GDOT

GDOT may assign all or any portion of its rights, title and interests in and to the DB Documents, payment and performance bond(s), guarantees, and other security for payment or performance, (a) without DB Team's consent, to any other Person that succeeds to the governmental powers and authority of GDOT, and (b) to others with the prior written consent of DB Team.

21.4 Notice and Assumption

21.4.1 Assignments and transfers of the DB Team's Interest permitted under this Article 21 (other than pursuant to Article 21.1.1.1) or otherwise accepted in writing by GDOT shall be effective only upon GDOT's receipt of written notice of the assignment or transfer and a written recordable instrument executed by the Transferee, in form and substance acceptable to GDOT, in which the Transferee, without condition or reservation, assumes all of DB Team's obligations, duties and liabilities under the DB Documents and agrees to perform and observe all provisions thereof applicable to DB Team.

21.4.2 Each Transferee, including any Person who acquires the DB Team's Interest pursuant to foreclosure, transfer in lieu of foreclosure or similar proceeding, shall take the DB Team's Interest subject to, and shall be bound by, the Project Management Plan, the Key Contracts, the Utility Agreements, all agreements between the transferor and railroads, the Governmental Approvals, and all agreements between the transferor and Governmental Entities with jurisdiction over the Project or the Work, except to the extent otherwise accepted by GDOT in writing in its good faith discretion.

21.4.3 Except with respect to assignments and transfers pursuant to foreclosure, transfer in lieu of foreclosure or similar proceeding, the transferor and Transferee shall give GDOT written notice of the assignment not less than thirty (30) days prior to the effective date thereof.

21.5 Change of Organization or Name

21.5.1 DB Team shall not change the legal form of its organization in a manner that adversely affects GDOT's rights, protections and remedies under the DB Documents without the prior written acceptance of GDOT, which consent may be granted or withheld in GDOT's sole discretion.

21.5.2 In the event either Party changes its name, such Party agrees to promptly furnish the other Party with written notice of change of name and appropriate supporting documentation.

Article 22 RECORDS AND AUDITS; INTELLECTUAL PROPERTY

22.1 Maintenance and Inspection of Records

22.1.1 DB Team shall keep and maintain at a single location all books, records and documents relating to the Project, Utility Adjustments or Work, including copies of all original documents delivered to GDOT. DB Team shall keep and maintain such books, records and documents in accordance with applicable provisions of the DB Documents, Section 2.3.8 of the Technical Provisions, and of the Project Management Plan, and in accordance with Good Industry Practice. DB Team shall notify GDOT where such records and documents are kept.

22.1.2 DB Team shall make all its books, records and documents available for inspection by GDOT, it representatives and legal counsel at DB Team's principal offices in Georgia, at all times during normal business hours, without charge. GDOT may conduct any such inspection upon 48 hours' prior written notice, or unannounced and without prior notice where there is good faith suspicion of fraud. The right of inspection includes the right to make extracts and take notes. The provisions of this Article 22.1.2 are subject to the following:

22.1.2.1 DB Team reserves the right to assert exemptions from disclosure for information that would be exempt under applicable State Law from discovery or introduction into evidence in legal actions; and

22.1.2.2 Unless otherwise lawfully required by the FHWA, federal Law or the Open Government Laws, DB Team may make available copies of books, records and documents containing trade secrets and confidential proprietary information with such information redacted. Unless otherwise lawfully required by the FHWA, federal Law or the Open Government Laws, GDOT shall have no right to make extracts of such trade secrets and confidential proprietary information except in connection with resolution of Claims and Disputes.

22.1.2.3 DB Team shall retain records and documents for a minimum of five (5) years after the date the record or document is generated; provided that if the DB Documents or applicable Law specify any longer time period for retention of particular records, such time period shall control. With respect to records and documents generated prior to Final Acceptance, the time period for retention shall commence upon Final Acceptance. Notwithstanding the foregoing, all records which relate to Claims being processed or actions brought forth under GDOT Standard Specification 105.13 "Claims for Adjustments and Disputes" shall be retained and made available until any later date that such Claims and actions are finally resolved. Refer to Attachment 1 to Exhibit 8 regarding applicable federal requirements.

22.2 Audits

22.2.1 GDOT shall have such rights to review and audit DB Team, its Contractors and their respective books and records as and when GDOT deems necessary for purposes of verifying compliance with the DB Documents and applicable Law. Without limiting the foregoing, GDOT shall have the right to audit DB Team's Project Management Plan and compliance therewith, including the right to inspect Work and/or activities and to verify the accuracy and adequacy of the Project Management Plan and its component parts, plans and other documentation. GDOT may conduct any such audit of books and records upon 48 hours' prior written notice, or unannounced and without prior notice where there is good faith suspicion of fraud.

22.2.2 All Claims filed against GDOT shall be subject to audit at any time following the filing of the Claim. The audit may be performed by employees of GDOT or by an auditor under contract with GDOT. Notice shall not be required before commencing any audit prior to sixty (60) days after the expiration of the term of this Agreement. Thereafter, GDOT shall provide twenty (20) days notice to DB Team, any Contractors or their respective agents before commencing an audit. DB Team, Contractors or their agents shall provide adequate facilities, acceptable to GDOT, for the audit during normal business hours. DB Team, Contractors or their agents shall cooperate with the auditors. Failure of DB Team, Contractors or their agents to maintain and retain sufficient books and records to allow the auditors to verify all or a portion of the Claim or to permit the auditor access to such books and records shall constitute a waiver of the Claim and shall bar any recovery thereunder. At a minimum, the auditors shall have available to them the following documents relating to the Claim:

22.2.2.1 Daily time sheets and supervisor's daily reports;

22.2.2.2 Union agreements;

22.2.2.3 Insurance, welfare, and benefits records;

22.2.2.4 Payroll registers;

22.2.2.5 Earnings records;

22.2.2.6 Payroll tax forms;

22.2.2.7 Material invoices and requisitions;

22.2.2.8 Material cost distribution work sheet;

22.2.2.9 Equipment records (list of company equipment, rates, etc.);

22.2.2.10 Contractors' (including Suppliers') invoices;

22.2.2.11 Contractors' and agents' payment certificates;

22.2.2.12 Canceled checks (payroll and Suppliers);

22.2.2.13 Job cost report;

22.2.2.14 Job payroll ledger;

22.2.2.15 General ledger;

22.2.2.16 Cash disbursements journal;

22.2.2.17 All documents that relate to each and every Claim together with all documents that support the amount of damages as to each Claim; and

22.2.2.18 Work sheets used to prepare the Claim establishing (a) the cost components of the Claim, including labor, benefits and insurance, materials, equipment, Contractors, all documents that establish the time periods, individuals involved, the hours for the individuals, and the rates for the individuals, and (b) the lost revenue components of the Claim.

22.2.3 Full compliance by DB Team with the provisions of this Article 22.2 is a contractual condition precedent to DB Team's right to seek relief on a Claim under Article 17.7.

22.2.4 Any rights of the FHWA to review and audit DB Team, its Contractors and their respective books and records are set forth in Attachment 1 to Exhibit 8.

22.2.5 GDOT's right of audit include the right to observe the business operations of DB Team and its Contractors to confirm the accuracy of books and records.

22.2.6 DB Team shall include in the Project Management Plan internal procedures to facilitate review and audit by GDOT and, if applicable, FHWA.

22.2.7 DB Team represents and warrants the completeness and accuracy in all material respects of all information it or its agents provides in connection with GDOT audits, and shall cause all Contractors other than Governmental Entities acting as Contractors to warrant the

completeness and accuracy in all material respects of all information such Contractors provide in connection with GDOT audits.

22.2.8 DB Team's internal and third party quality and compliance auditing responsibilities shall be set forth in the Project Management Plan.

22.2.9 Nothing in the DB Documents shall in any way limit the constitutional and statutory powers, duties and rights of elected State officials, including the independent rights of the State Auditor, in carrying out his or her legal authority. DB Team understands and acknowledges that (a) the State auditor may conduct an audit or investigation of any entity receiving funds from the State directly under this Agreement or indirectly through a Contract, (b) acceptance of funds directly under this Agreement or indirectly through a Contract acts as acceptance of the authority of the State auditor to conduct an audit or investigation in connection with those funds, and (c) an entity that is the subject of an audit or investigation must provide the State auditor with access to any information the State auditor considers relevant to the investigation or audit.

22.3 Open Government Laws and Freedom of Information Act

22.3.1 DB Team acknowledges and agrees that all Submittals, records, documents, drawings, plans, specifications and other materials in GDOT's possession, including materials submitted by DB Team to GDOT (whether directly or indirectly), are subject to the provisions of the Open Government Laws, subject only to certain exceptions and exemptions contained therein. DB Team also acknowledges that, pursuant to O.C.G.A. § 50-18-70(a), "[r]ecords received or maintained by a private person, firm, corporation, or other private entity in the performance of a service or function for or on behalf of an agency, a public agency, or a public office shall be subject to disclosure to the same extent that such records would be subject to disclosure if received or maintained by such agency, public agency, or public office." If DB Team believes information or materials submitted or otherwise made available to GDOT constitute trade secrets, proprietary information or other information that is not subject to the Open Government Laws or is excepted from disclosure under the Open Government Laws, DB Team shall be solely responsible for specifically and conspicuously designating that information by placing "CONFIDENTIAL" in the center header of each such document or page affected, as it determines to be appropriate. Any specific proprietary information, trade secrets or confidential commercial and financial information shall be clearly identified as such, and shall be accompanied by a concise statement of reasons supporting the claim. Nothing contained in this Article 22.3.1 shall modify or amend requirements and obligations imposed on GDOT by the Open Government Laws or other applicable Law, and the provisions of the Open Government Laws or other Laws shall control in the event of a conflict between the procedures described above and the applicable Law. DB Team is advised to contact legal counsel concerning such Law and its application to DB Team.

22.3.2 If GDOT receives a request for public disclosure of materials marked "CONFIDENTIAL," GDOT (as the case may be) will endeavor to notify DB Team of the request. DB Team may seek a protective order or other appropriate remedy. If GDOT determines in good faith that the materials identified as "CONFIDENTIAL" are not exempt from the Open Government Laws, GDOT will release the requested information within the applicable statutory time period, unless otherwise directed by an order of a court of competent jurisdiction. GDOT shall make the final determination regarding whether the requested information is to be disclosed or withheld.

22.3.3 In the event of any proceeding or litigation concerning the disclosure of any material submitted by DB Team to GDOT, DB Team shall be fully responsible for otherwise prosecuting or defending any action concerning the materials at its sole cost and risk; provided, however, that the Attorney General of the State shall represent GDOT who will participate in the litigation in such manner as they each may deem necessary or desirable. Except in the case of GDOT's voluntary intervention in litigation, DB Team shall pay and reimburse GDOT (as the case may be) within thirty (30) days after receipt of written demand and reasonable supporting documentation for all costs and fees, including attorneys' fees and costs, GDOT incurs in connection with any litigation, proceeding or request for disclosure.

22.3.4 DB Team further acknowledges and agrees that all Submittals, records, documents, drawings, plans, specifications and other materials in FHWA's possession may also be subject to disclosure under federal Law, including the Freedom of Information Act. DB Team's rights and obligations with respect to such disclosure shall be in accordance with such federal Law.

22.4 Intellectual Property

22.4.1 All Proprietary Intellectual Property, including with respect to Technology Enhancements, Source Code and Source Code Documentation, shall remain exclusively the property of DB Team or its Affiliates or Contractors that supply the same, notwithstanding any delivery of copies thereof to GDOT.

22.4.2 GDOT shall have and is hereby granted a nonexclusive, transferable, irrevocable, fully paid up right and license to use, reproduce, modify, adapt and disclose, and sublicense others to use, reproduce, modify, adapt and disclose, the Proprietary Intellectual Property of DB Team, including with respect to Technology Enhancements, Source Code and Source Code Documentation, solely in connection with the Project and any Highway, tolled or not tolled, owned and operated by GDOT or a State or regional Governmental Entity.

22.4.3 Subject to the license and rights granted to GDOT pursuant to Article 22.4.2, GDOT shall not at any time sell any Proprietary Intellectual Property of DB Team or use, reproduce, modify, adapt and disclose, or allow any party to use, reproduce, modify, adapt and disclose, any such Proprietary Intellectual Property for any other purpose not consistent with Article 22.4.2 above.

22.4.4 The right to transfer the license is limited to any Governmental Entity that succeeds to the power and authority of GDOT generally or with respect to the Project.

22.4.5 The right to sublicense is limited to State or regional Governmental Entities that own or operate a Highway or other road, tolled or not tolled, and to the concessionaires, contractors, subcontractors, employees, attorneys, consultants and agents that are retained by or on behalf of GDOT or any such State or regional Governmental Entity in connection with the Project or another Highway or other road, tolled or untolled. All such sublicenses shall be subject to Article 22.4.6.

22.4.6 Subject to Article 22.3, GDOT shall:

22.4.6.1 Not disclose any Proprietary Intellectual Property of DB Team to any Person other than authorized transferees and sublicensees who agree to be bound by any confidentiality obligations of GDOT relating thereto;

22.4.6.2 Enter into a commercially reasonable confidentiality agreement if requested by DB Team with respect to the licensed Proprietary Intellectual Property; and

22.4.6.3 Include, or where applicable require such State or regional Governmental Entity to include, in the contract with the sublicensee its covenant to employ sound business practices no less diligent than those used for its own confidential information, and no less diligent than required by commercially reasonable standards of confidentiality, to protect all Proprietary Intellectual Property of DB Team and other materials provided under the sublicense against disclosure to third parties not in receipt of a sublicense, and to use the sublicense only for the permitted purposes.

22.4.7 Notwithstanding any contrary provision of the DB Documents, in no event shall GDOT or any of their respective directors, officers, employees, consultants or agents be liable to DB Team, any Affiliate or any Contractor for any damages, including loss of profit, arising out of breach of the duty of confidentiality set forth in Article 22.4.6 if such breach is not the result of gross negligence or intentional misconduct or is required under the provisions of the Open Government Records Law or a court order or other legal requirement.

22.4.8 DB Team shall continue to have a full and complete right to use any and all duplicates or other originals of its Proprietary Intellectual Property in any manner it chooses.

22.4.9 With respect to any Proprietary Intellectual Property, including with respect to Technology Enhancements, Source Code and Source Code Documentation, owned by a Person other than DB Team, including any Affiliate, and other than GDOT or a Governmental Entity acting as a Contractor, DB Team shall obtain from such owner, concurrently with execution of any contract, subcontract or purchase order with such owner or with the first use or adaptation of the Proprietary Intellectual Property in connection with the Project, for DB Team, and GDOT, nonexclusive, transferable, irrevocable, fully paid up licenses to use, reproduce, modify, adapt and disclose such Proprietary Intellectual Property solely in connection with the Project and any Highway, tolled or not tolled, owned and operated by GDOT or a State or regional Governmental Entity, of at least identical scope, purpose, duration and applicability as the license granted under Article 22.4.1. The foregoing requirement shall not apply, however, to mass-marketed software products (sometimes referred to as “shrink wrap software”) owned by such a Person where such a license cannot be extended to GDOT using commercially reasonable efforts. The limitations on sale, transfer, sublicensing and disclosure by GDOT set forth in Articles 22.4.3 through 22.4.6 shall also apply to GDOT’s licenses in such Proprietary Intellectual Property.

22.5 Reserved

Article 23 FEDERAL REQUIREMENTS

23.1 Compliance with Federal Requirements

DB Team shall comply and require its Contractors to comply with all federal requirements applicable to transportation projects that receive federal credit or funds, including those set forth in Exhibit 8. In the event of any conflict between any applicable federal requirements and the other requirements of the DB Documents, the federal requirements shall prevail, take precedence and be in force over and against any such conflicting provisions.

23.2 Role of and Cooperation with FHWA

DB Team acknowledges and agrees that FHWA will have certain approval rights with respect to the Project, including the right to provide certain oversight and technical services with respect to the Work. DB Team shall cooperate with FHWA in the reasonable exercise of FHWA's duties and responsibilities in connection with the Project and shall provide such assistance and information as may be required by GDOT to comply with FHWA reporting requirements.

Article 24 MISCELLANEOUS

24.1 Taxes

DB Team shall pay, prior to delinquency, all applicable Taxes. DB Team shall have no right to a Compensation Event or any other Claim due to its misinterpretation of Laws respecting Taxes or incorrect assumptions regarding applicability of Taxes.

24.2 Amendments

The DB Documents may be amended only by a written instrument duly executed by the Parties or their respective successors or assigns, except to the extent expressly provided otherwise in this Agreement.

24.3 Waiver

24.3.1 No waiver of any term, covenant or condition of this Agreement or the other DB Documents shall be valid unless in writing and signed by the obligee Party.

24.3.2 The exercise by a Party of any right or remedy provided under this Agreement or the other DB Documents shall not waive or preclude any other or further exercise thereof or the exercise of any other right or remedy. No waiver by any Party of any right or remedy under this Agreement or the other DB Documents shall be deemed to be a waiver of any other or subsequent right or remedy under this Agreement or the other DB Documents. The consent by one Party to any act by the other Party requiring such consent shall not be deemed to render unnecessary the obtaining of consent to any subsequent act for which consent is required, regardless of whether similar to the act for which consent is given.

24.3.3 Except as provided otherwise in the DB Documents, no act, delay or omission done, suffered or permitted by one Party or its agents shall be deemed to waive, exhaust or impair any right, remedy or power of such Party hereunder, or to relieve the other Party from the full performance of its obligations under this Agreement or the other DB Documents.

24.3.4 Either Party's waiver of any breach or failure to enforce any of the terms, covenants, conditions or other provisions of the DB Documents at any time shall not in any way limit or waive that Party's right thereafter to enforce or compel strict compliance with every term, covenant, condition or other provision, any course of dealing or custom of the trade notwithstanding. Furthermore, if the Parties make and implement any interpretation of the DB Documents without documenting such interpretation by an instrument in writing signed by both Parties, such interpretation and implementation thereof will not be binding in the event of any future Disputes.

24.3.5 Subject to Article 13.2.8, the acceptance of any payment or reimbursement by a Party shall not waive any preceding or then-existing breach or default by the other Party of any

term, covenant or condition of this Agreement or the other DB Documents, other than the other Party's prior failure to pay the particular amount or part thereof so accepted, regardless of the paid party's knowledge of such preceding or then-existing breach or default at the time of acceptance of such payment or reimbursement. Nor shall such acceptance continue, extend or affect: (a) the service of any notice, any Claims or final judgment; (b) any time within which the other Party is required to perform any obligation; or (c) any other notice or demand.

24.4 Independent Contractor

24.4.1 DB Team is an independent contractor, and nothing contained in the DB Documents shall be construed as constituting any relationship with GDOT other than that of an independent contractor under this Agreement.

24.4.2 Nothing in the DB Documents is intended or shall be construed to create any partnership, joint venture or similar relationship between GDOT and DB Team; and in no event shall either Party take a position in any tax return or other writing of any kind that a partnership, joint venture or similar relationship exists. While the term "public-private partnership" may be used on occasion to refer to contractual relationships of the type hereby created, the Parties do not thereby express any intention to form or hold themselves out as a *de jure* or *de facto* partnership, joint venture or similar relationship, to share net profits or net losses, or to give GDOT control or joint control over DB Team's financial decisions or discretionary actions concerning the Project and Work.

24.4.3 In no event shall the relationship between GDOT and DB Team be construed as creating any relationship whatsoever between GDOT and DB Team's employees. Neither DB Team nor any of its employees is or shall be deemed to be an employee of GDOT. Except as otherwise specified in the DB Documents, DB Team has sole authority and responsibility to employ, discharge and otherwise control its employees and has complete and sole responsibility as a principal for its agents, for all Contractors and for all other Persons that DB Team or any Contractor hires to perform or assist in performing the Work.

24.5 Successors and Assigns

The DB Documents shall be binding upon and inure to the benefit of GDOT and DB Team and their permitted successors, assigns and legal representatives.

24.6 Designation of Representatives; Cooperation with Representatives

24.6.1 GDOT and DB Team shall each designate an individual or individuals who shall be authorized to make decisions and bind the Parties on matters relating to the DB Documents ("Authorized Representative"). In addition, for purposes of Project administration and oversight to be performed by GDOT as provided in this Agreement, GDOT shall designate an individual or individuals who shall be authorized to make decisions and bind GDOT and upon such person(s) direction DB Team may rely. Exhibit 22 provides the initial Authorized Representative designations. A Party may change such designations by a subsequent writing delivered to the other Party in accordance with Article 24.11. For purposes of this Agreement, the Parties, except where expressly stated to the contrary, all communications and deliveries, including submittals, shall be through the respective Authorized Representative for each party.

24.6.2 DB Team shall cooperate with GDOT and all representatives of GDOT designated as described above.

24.7 Survival

DB Team's and GDOT's representations, covenants, warranties, the express obligations of the Parties following termination, and all other provisions which by their inherent character should survive expiration or earlier termination of this Agreement and/or completion of the Work shall survive the expiration or earlier termination of this Agreement and/or the completion of the Work.

24.8 Limitation on Third Party Beneficiaries

24.8.1 It is not intended by any of the provisions of the DB Documents to create any third party beneficiary hereunder or to authorize anyone not a Party hereto to maintain a suit for personal injury or property damage pursuant to the terms or provisions hereof, except to the extent provided in Article 24.9.2 and other specific provisions (such as the warranty and indemnity provisions) that identify third parties and state that they are entitled to benefits hereunder. Except as otherwise provided in this Article 24.8, the duties, obligations and responsibilities of the Parties to the DB Documents with respect to third parties shall remain as imposed by Law. The DB Documents shall not be construed to create a contractual relationship of any kind between GDOT and a Contractor or any Person other than DB Team.

24.8.2 GDOT shall be a third party beneficiary, and entitled to the benefits, with respect to the rights under the DB Documents related to the following:

24.8.2.1 Oversight, review, inspection, testing, monitoring, acceptance, and enforcement of DB Team's obligations to perform the design and construction of the Project in accordance with the DB Documents and applicable Law.

24.8.2.2 Review, audit, inspection and copying of data, information, documents, books and records of DB Team and any other DB Team-Related Entity.

24.8.2.3 Step in rights upon the occurrence of a DB Team Default.

24.9 No Personal Liability of GDOT Employees; No Tort Liability

24.9.1 GDOT's officers, employees, representatives are acting solely as agents and representatives of such respective entities, as applicable, when carrying out the provisions of or exercising the power or authority granted to them under this Agreement and the DB Documents. They shall not be liable either personally or as employees of GDOT for actions in their ordinary course of employment.

24.9.2 The Parties agree to provide to each other with written notice of any claim which such Party may receive from any third party relating in any way to the matters addressed in this Agreement, and shall otherwise provide notice in such form and within such period as is required by Law.

24.10 Governing Law

The DB Documents shall be governed by and construed in accordance with the laws of the State of Georgia.

24.11 Notices and Communications

24.11.1 Notices under the DB Documents shall be in writing and: (a) delivered personally; (b) sent by certified mail, return receipt requested; (c) sent by a recognized overnight mail or courier service, with delivery receipt requested, or (d) sent by facsimile or email communication followed by a hard copy and with receipt confirmed by telephone, to the following addresses (or to such other address as may from time to time be specified in writing by such Person):

24.11.2 All notices, correspondence and other communications to DB Team shall be delivered to the following address or as otherwise directed by DB Team's Authorized Representative:

_____
_____
_____
Telephone: _____
Facsimile: _____
E-mail: _____

24.11.3 All notices, correspondence and other communications to GDOT shall be marked as regarding the "I-285 Ramps at CR 209/ Riverside Drive Project" and shall be delivered to the following address or as otherwise directed by GDOT's Authorized Representative:

_____.
Georgia Department of Transportation

_____

_____

In addition, copies of all notices regarding Disputes, and termination and default notices shall be delivered to the following person:

Georgia Department of Transportation
Office of General Counsel
600 West Peachtree Street, Suite 2300
Atlanta, Georgia 30308
Attention:
Telephone: (404) _____
Facsimile: (404) _____
E-mail: _____

24.11.4 Notices shall be deemed received when actually received in the office of the addressee (or by the addressee if personally delivered) or when delivery is refused, as shown on the receipt of the U.S. Postal Service, private carrier or other Person making the delivery. Notwithstanding the foregoing, notices sent by facsimile after 12:00 p.m. Eastern Standard or Daylight Time (as applicable) and all other notices received after 12:00 p.m. shall be deemed received on the first Business Day following delivery (that is, in order for a fax to be deemed received on the same day, at least the first page of the fax must have been received before 12:00 p.m.). Any technical or other communications pertaining to the Work shall be

conducted by DB Team's Authorized Representative and technical representatives designated by GDOT.

24.12 Integration of DB Documents

GDOT and DB Team agree and expressly intend that, subject to Article 24.13, this Agreement, and other DB Documents constitute a single, non-severable, integrated agreement whose terms are interdependent and non-divisible.

24.13 Severability

24.13.1 If any clause, provision, section or part of this Agreement or the other DB Documents or any other Principal Project Document (other than the Design-Build Contract) is ruled invalid (including invalid due to Change in Law) by a court having proper jurisdiction, then the Parties shall: (a) promptly meet and negotiate a substitute for such clause, provision, section or part, which shall, to the greatest extent legally permissible, effect the original intent of the Parties; and (b) if necessary or desirable, apply to the court or other decision maker (as applicable) which declared such invalidity for an interpretation of the invalidated portion to guide the negotiations. The invalidity or unenforceability of any such clause, provision, section or part shall not affect the validity or enforceability of the balance of the DB Documents or such other Principal Project Documents, which shall be construed and enforced as if the DB Documents or such other Principal Project Documents did not contain such invalid or unenforceable clause, provision, section or part.

24.13.2 If after the efforts required by Article 24.13.1, the Parties mutually agree that without the section or part of the DB Documents or such other Principal Project Documents that the court ruled to be invalid, there is no interpretation or reformation of the DB Documents or such other Principal Project Documents that can reasonably be adopted which will return the Parties to the benefits of their original bargain, the Parties can mutually agree to treat the court order as a Termination by Court Ruling pursuant to Article 19.11.

24.14 Headings

The captions of the sections of this Agreement and in the DB Documents are for convenience only and shall not be deemed part of this Agreement or the DB Documents or considered in construing this Agreement or the DB Documents.

24.15 Construction and Interpretation of the DB Documents

24.15.1 The language in all parts of the DB Documents shall in all cases be construed simply, as a whole and in accordance with its fair meaning and not strictly for or against any Party. The Parties hereto acknowledge and agree that the DB Documents are the product of an extensive and thorough, arm's length exchange of ideas, questions, answers, information and drafts during the Proposal preparation process, that each Party has been given the opportunity to independently review the DB Documents with legal counsel, and that each Party has the requisite experience and sophistication to negotiate, understand, interpret and agree to the particular language of the provisions of the DB Documents. Accordingly, in the event of an ambiguity in or Dispute regarding the interpretation of the DB Documents, the DB Documents shall not be interpreted or construed against the Party preparing it, and instead other rules of interpretation and construction shall be utilized. GDOT's final answers to the questions posed during the Proposal preparation process for this Agreement shall in no event

be deemed part of the DB Documents and shall not be relevant in interpreting the DB Documents except as they may clarify provisions otherwise considered ambiguous.

24.15.2 The captions of the articles, sections and subsections herein are inserted solely for convenience and under no circumstances are they or any of them to be treated or construed as part of this instrument.

24.15.3 References in this instrument to this "Agreement" mean, refer to and include this instrument as well as any riders, exhibits, addenda and attachments hereto (which are hereby incorporated herein by reference) or other documents expressly incorporated by reference in this instrument. Any references to any covenant, condition, obligation and/or undertaking "herein," "hereunder" or "pursuant hereto" (or language of like import) mean, refer to and include the covenants, conditions, obligations and undertakings existing pursuant to this instrument and any riders, exhibits, addenda, attachments or other documents affixed to or expressly incorporated by reference in this instrument. All terms defined in this instrument shall be deemed to have the same meanings in all riders, exhibits, addenda, attachments or other documents affixed to or expressly incorporated by reference in this instrument unless the context thereof clearly requires the contrary. Unless expressly provided otherwise, all references to exhibits, articles and sections refer to same as set forth in this Agreement. Where a specific section is referenced, such reference shall include all subsections thereunder. Unless otherwise stated in this Agreement or the other DB Documents, words that have well-known technical or construction industry meanings are used in this Agreement or the other DB Documents in accordance with such recognized meaning. All references to a subsection or clause "above" or "below" refer to the denoted subsection or clause within the section in which the reference appears. Wherever the word "including," "includes" or "include" is used in the DB Documents, it shall be deemed to be followed by the words "without limitation". Wherever reference is made in the DB Documents to a particular Governmental Entity, it includes any public agency succeeding to the powers and authority of such Governmental Entity.

24.15.4 As used in this Agreement and the other DB Documents and as the context may require, the singular includes the plural and vice versa, and the masculine gender includes the feminine and vice versa.

24.16 Usury Savings

The DB Documents are subject to the express condition that at no time shall either Party be obligated or required to pay interest on any amount due the other Party at a rate which could subject the other Party to either civil or criminal liability as a result of being in excess of the maximum non-usurious interest rate permitted by Georgia Law (the "maximum legal rate"), if any. If, by the terms of the DB Documents either Party at any time is obligated to pay interest on any amount due in excess of the maximum legal rate, then such interest shall be deemed to be immediately reduced to the maximum legal rate and all previous payments in excess of the maximum legal rate shall be deemed to have been payments in reduction of the principal amount due and not on account of the interest due. All sums paid or agreed to be paid to a Party for the use, forbearance, or detention of the sums due that Party under the DB Documents shall, to the extent permitted by applicable Georgia Law, be amortized, prorated, allocated, and spread throughout the full period over which the interest accrues until payment in full so that the rate or amount of interest on account of the amount due does not exceed the maximum legal rate in effect from time to time during such period. If after the foregoing adjustments a Party still

holds interest payments in excess of the maximum legal rate, it shall promptly refund the excess to the other Party.

24.17 Acceptance under DB Documents

24.17.1 Refer to Articles 6.3.3 and 6.3.4 regarding the standards for GDOT acceptance or consent.

24.17.2 In all cases where acceptance or consents are required to be provided under the DB Documents by DB Team and no particular standard for such acceptance or consents is expressly provided, such acceptance or consents shall not be unreasonably withheld or delayed. In cases where sole discretion is specified, DB Team's decision shall be final, binding and not subject to GDOT Standard Specification 105.13 "Claims for Adjustments and Disputes" hereunder.

24.18 Entire Agreement

This Agreement and the other DB Documents contain the entire understanding of the Parties with respect to the subject matter thereof and supersede all prior agreements, understandings, statements, representations and negotiations between the Parties with respect to their subject matter.

24.19 Counterparts

This instrument may be executed in two or more counterparts, each of which shall be deemed an original, but all of which together shall constitute one and the same instrument.

CALL ###

CONTRACT IDENTIFICATION NUMBER	DATE CONTRACT EXECUTED
XXXX	
PROJECT NUMBER(S)	COUNTY(IES)
0010925	Fulton County
CONTRACTOR	
Contractor Name	
DESCRIPTION OF IMPROVEMENTS AND FACILITY	
I-285 RAMPS AT CR 209/ RIVERSIDE DRIVE PROJECT	
AMOUNT OF CONTRACT	
$	

[Signature Page Immediately Follows]

IN WITNESS WHEREOF, the Parties, intending to be legally bound, have executed this Agreement, including the requirements of the DB Documents.

ALL REFERENCES in this document, which include all papers, writings, documents, drawings, or photographs used, or to be used, in connection with this document, to "State Highway Department of Georgia", "State Highway Department", "Georgia State Highway Department", "Highway Department", "Department", or "Department of Transportation" when the context thereof means that State Highway Department of Georgia, mean, and shall be deemed to mean, GDOT.

THIS AGREEMENT is being executed on the Date Contract Executed, specified above, in Fulton County, Georgia.

IN WITNESS WHEREOF THE PARTIES HAVE SET THEIR HANDS AND AFFIXED THEIR SEALS:

PARTY OF THE FIRST PART

DEPARTMENT OF TRANSPORTATION, STATE OF GEORGIA

WITNESS

ATTESTED BY TREASURER, GEORGIA DOT

WITNESS

BY COMMISSIONER

PARTY OF THE SECOND PART

I attest that the seal imprinted hereon is the corporate seal of the Contractor named above and that the signature which appears hereon is genuine and is that of the President (Vice President) of the corporation who is duly authorized to execute the foregoing document on behalf of the corporation; and that the execution of the foregoing document on behalf of the corporation has been duly authorized.

CORPORATE CONTRACTOR (1)

Company Name (1)

(SEAL)

BY PRESIDENT OR VICE PRESIDENT (1)

THIS DAY OF

BY SECRETARY OR ASSISTANT SECRETARY (1)

(SEAL)

(SEAL)

I attest that the seal imprinted hereon is the corporate seal of the Contractor named above and that the signature which appears hereon is genuine and is that of the President (Vice President) of the corporation who is duly authorized to execute the foregoing document on behalf of the corporation; and that the execution of the foregoing document on behalf of the corporation has been duly authorized.

CORPORATE CONTRACTOR (2)

Company Name (2)

(SEAL)

BY PRESIDENT OR VICE PRESIDENT (2)

THIS DAY OF

BY SECRETARY OR ASSISTANT SECRETARY (2)

(SEAL)

(SEAL)

WITNESS (1)

INDIVIDUAL OR PARTNERSHIP CONTRACTOR (1)

(SEAL)

(SEAL)

WITNESS (1)	BY OWNER OR PARTNER (1)
(SEAL)	(SEAL)
WITNESS (2)	INDIVIDUAL OR PARTNERSHIP CONTRACTOR (2)
(SEAL)	(SEAL)
WITNESS (2)	BY OWNER OR PARTNER (1)
(SEAL)	(SEAL)

EXHIBIT 1

ABBREVIATIONS AND DEFINITIONS

Unless otherwise specified, wherever the following abbreviations or terms are used in this Agreement and the Technical Provisions, they have the meanings set forth below:

AASHTO	American Association of State Highway and Transportation Officials
ADA	Americans with Disabilities Act
AGC	Associated General Contractors of America
AMRL	AASHTO Materials Reference Laboratory
ANSI	American National Standards Institute
APE	Area of Potential Effects
ARC	Atlanta Regional Commission
AREMA	American Railway Engineering and Maintenance of Way Association
ASTM	American Society of Testing and Materials
ATC	Alternative Technical Concept
AVI	Automatic Vehicle Identification
AWS	American Welders Society
BMP	Best Management Practice
CAD	Computer Aided Design
CCTV	Closed Circuit Television
CE	Categorical Exclusion
CFR	Code of Federal Regulations
CMS	Changeable Message Sign
CPI	Consumer Price Index
CSC	Customer Service Center
CSJ	Control Section Job
CWA	Clean Water Act
DB	Design-Build
DBE	Disadvantaged Business Enterprise, as set forth in 49 CFR Part 26
DEIS	Draft Environmental Impact Statement
DMS	Dynamic Message Signs
DNR	Georgia Department of Natural Resources
DSS	Decent, Safe and Sanitary
EA	Environmental Assessment
EP	Extraction Procedure (toxicity)
EPD	Georgia Department of Natural Resources, Environmental Protection Division
EPIC	Environmental Permits Issues and Commitments
ESA	Endangered Species Act of 1973, 16 U.S.C. §§ 1531 *et seq.*, as amended from time to time
ETCS	Electronic Toll Collection System
FAA	Federal Aviation Administration

FAPG	Federal-Aid Policy Guide
FEMA	Federal Emergency Management Agency
FHWA	U.S. Federal Highway Administration
FEIS	Final Environmental Impact Statement
FONSI	Finding of No Significant Impact
FTP	File Transfer Protocol
FWCA	Fish and Wildlife Coordination Act, 16 U.S.C. §§661 *et seq*., as amended from time to time
GDOT	Georgia Department of Transportation
GEPA	Georgia Environmental Policy Act, Section 12-16-1, et seq. of the Official Code of Georgia Annotated
GIS	Geographical Information System
GP	General Purpose
HEC-FFA	Hydraulic Engineering Circular – Flood Frequency Analysis
HCR	Highway Conditions Report
HOT	High Occupancy/Toll
HOV	High Occupancy Vehicle
ICD	Interface Control Document
ID	Form of Identification
IH	Interstate Highway
IRI	International Roughness Index
ISO	International Organization for Standardization
ITS	Intelligent Transportation System
IVHS	Intelligent Vehicle Highway System
IWP	Investigative Work Plan
LCS	Lane Control System
MARTA	Metropolitan Atlanta Rapid Transit Authority
MDS	Microwave Detection System
MOA	Memorandum of Agreement
MOT	Maintenance of Traffic
MOU	Memorandum of Understanding
MPH	Miles Per Hour
MPO	Metropolitan Planning Organization
MS4	Municipal Separate Storm Sewer System
MSDS	Materials Safety Data Sheets
MSE	Mechanically Stabilized Earth
MUTCD	Manual of Traffic Control Devices
NAVD	North American Vertical Datum
NBIS	National Bridge Inspection Standards
NCHRP	National Cooperative Highway Research Program
NEPA	National Environmental Policy Act, 42 U.S.C. § 4321 *et seq*., as amended

	from time to time
NFIP	National Flood Insurance Program
NOI	Notice of Intent
NPDES	National Pollutant Discharge Elimination System
NRCS	Natural Resource Conservation Service
NRHP	National Register of Historic Places
NTP	Notice to Proceed
OCGA	Official Code of Georgia Annotated
OCR	Optical Character Recognition
ORT	Open Road Toll
OSAH	Georgia Office of State Administrative Hearings
OSHA	Occupational Safety and Health Administration
OVT	Owner Verification Tests
PA	Programmatic Agreement
PACES	Pavement Condition Evaluation System
PICP	Public Information and Communications Plan
PLS (or RPLS)	Registered Professional Land Surveyor
PMP	Project Management Plan
PUA	Possession and Use Agreement
QMP	Quality Management Plan
RFC	Release for Construction
RFI	Request for Information
RFQ	Request for Qualifications
RFP	Request for Proposals
RLM	Residual Life Methodology
ROD	Record of Decision
ROW	Right of Way
ROW AM	Right of Way Acquisition Manager
ROWIS	Right of Way Information System
RTF	Related Transportation Facilities
SDPP	Special Deposit and Possession Procedure
SDEIS	Supplemental Draft Environmental Impact Statement
SH	State Highway
SHPO	State Historic Preservation Officer
SOQ	Statement of Qualifications
SOV	Single Occupancy Vehicle
SSTR	Single Slope Traffic Railing
SRTA	State Road and Tollway Authority
STA	State Transportation Agency
SUE	Subsurface Utility Engineering

TCLP	Toxicity Characteristic Leaching Procedure
TMC	Traffic Management Center
TMP	Transportation Management Plan
TOC	Toll Operations Center
UAM	Utility Accommodation Manual
UCS	User Classification Subsystem
UDC	Utility Design Coordinator
UJUA	Utility Joint Use Acknowledgment or Utility Joint Use Agreement
UM	Utility Manager
US	United States Highway
USACE	United States Army Corps of Engineers
U.S. DOT	United States Department of Transportation
USFWS	United States Fish and Wildlife Service
U.S. GAAP	U.S. Generally Accepted Accounting Principles
USPAP	Uniform Standard of Professional Appraisal Practices
UTM	Universal Transverse Mercator
VDS	Video Detection System
VES	Video Exception Sub-system
WBS	Work Breakdown Structure
WECS	Worksite Erosion Control Supervisor
WTCS	Worksite Traffic Control Supervisor
WUCS	Worksite Utility Coordination Supervisor

Abandonment means that Design-Build Team abandons all or a material part of the Project, which abandonment shall have occurred if (a) Design-Build Team demonstrates through acts or omissions an intent not to continue, for any reason other than a Relief Event that materially interferes with ability to continue, to construct or operate all or a material part of the Project and (b) no significant Work (taking into account the Project Baseline Schedule, if applicable, and any Relief Event) on the Project or a material part thereof is performed for a continuous period of more than forty five (45) days.

Addenda/Addendum means supplemental additions, deletions, and modifications to the provisions of the RFP after the release of the draft RFP.

Additional Properties means those parcels or portions of property proposed by Design-Build Team in addition to the ROW, including with respect to an approved ATC or otherwise contiguous to the Property and to be used for Project or in connection with the construction thereof, all as expressly designated as "Additional Properties" within the Right of Way Acquisition Plan. Additional Properties shall not include any Project Specific Locations.

Adjust means to perform a Utility Adjustment.

Administrative Information Submittals means those submittals Proposers are required to submit with their respective Proposal.

Adjustment means a Utility Adjustment.

Adjustment Standards means the standard specifications, standards of practice, and construction methods that a Utility Owner customarily applies to facilities (comparable to those being Adjusted on account of the Project) constructed by the Utility Owner (or for the Utility Owner by its contractors), at its own expense. Unless the context requires otherwise, references in the DB Documents to a Utility Owner's "applicable Adjustment Standards" refer to those that are applicable pursuant to Article 7.5.3 of the Agreement.

Affiliate means:

(a) any shareholder, member, partner or joint venture member of Design-Build Team,

(b) any Person which directly or indirectly through one or more intermediaries controls, or is controlled by, or is under common control with, Design-Build Team or any of its shareholders, members, partners or joint venture members; and

(c) any Person for which ten percent (10%) or more of the equity interest in such Person is held directly or indirectly, beneficially or of record by (i) Design-Build Team, (ii) any of Design-Build Team's shareholders, members, partners or joint venture members or (iii) any Affiliate of Design-Build Team under clause (b) of this definition.

For purposes of this definition the term "control" means the possession, directly or indirectly, of the power to cause the direction of the management of a Person, whether through voting securities, by contract, family relationship or otherwise.

Affidavit of Property Interest means the form of documentation of Existing Utility Property Interests described in Section 6.2.4 of the Technical Provisions.

Age means the elapsed time since an Element was first constructed or installed or, if applicable, last reconstructed, rehabilitated, restored, renewed or replaced.

Agreement, **DBA**, or **DB Agreement** means this certain Design-Build Agreement executed by GDOT and Design-Build Team, including any and all exhibits, attachments, riders, and amendments thereto.

Alternative Technical Concept ("ATC") means an alternative technical concept proposed by Design-Build Team pursuant to the terms set forth in the RFP.

Apparent Successful Proposer" means the Proposer with the apparent Successful Proposeral, taking into consideration the evaluation criteria and procedures.

Area of Potential Effects means the geographic area or areas within which an undertaking may directly or indirectly cause alterations in the character or use of Historic Properties, if such properties exist.

Authorized Representative has the meaning set forth in Article 24.6.1 of the Agreement, and shall be applicable person(s) and/or party(ies) authorized to act on behalf of each of GDOT and the Design-Build Team respectively, as initially set forth pursuant to Exhibit 22 of the Agreement. All notices, deliveries, responses, approvals, and other communications among GDOT and/or the Design-Build Team shall be directed to the respective Authorized Representative for each of the aforementioned, unless expressly provided to the contrary in this Agreement.

Best Management Practices (BMP) has the meaning set forth in *Storm Water Management For Construction Activities: Developing Pollution Prevention Plans and Best Management Practices* (EPA Document 832 R 92-005).

Best Value Proposal means the Proposal meeting the standards set by the RFP that GDOT determines, through the evaluation process and evaluation criteria described in this ITP, to present the best value and to be in the best interest of GDOT and the State.

Betterment has, with respect to a given Utility being Adjusted, the meaning (if any) set forth in the Utility Agreement(s) applicable to the Utility; in all other cases, "Betterment" means any upgrading of the Utility in the course of such Utility Adjustment that is not attributable to the construction of the Project and is made solely for the benefit of and at the election of the Utility Owner, including an increase in the capacity, capability, efficiency or function of an Adjusted Utility over that which was provided by the existing Utility. Notwithstanding the foregoing, the following are not considered Betterments unless otherwise provided in the applicable Utility Agreement(s):

(a) any upgrading which is required for accommodation of the Project;

(b) replacement devices or materials that are of equivalent standards although not identical;

(c) replacement of devices or materials no longer regularly manufactured with an equivalent or next higher grade or size;

(d) any upgrading required by applicable Law;

(e) replacement devices or materials that are used for reasons of economy (e.g., non-stocked items may be uneconomical to purchase); and

(f) any upgrading required by the Utility Owner's applicable Adjustment Standards.

With respect to any Replacement Utility Property Interest, "**Betterment**" has the meaning (if any) set forth in the applicable Utility Agreement(s). In all other cases, a Replacement Utility Property Interest shall be considered a Betterment, except to the extent that reinstallation of a Utility in the Replacement Utility Property Interest (i) is necessary in order to meet the requirements of the DB Documents, or (ii) is called for by Design-Build Team in the interest of overall economy for the Project.

Business Day means any day on which GDOT is officially open for business.

Change in Law means (a) the adoption of any Law after the date that is ninety (90) days prior to the Proposal Due Date, or (b) any change, amendment to, repeal or revocation of any Law or in the interpretation or application thereof by any Governmental Entity after the date that is ninety (90) days prior to the Proposal Due Date, in each case that is materially inconsistent with Laws in effect ninety (90) days prior to the Proposal Due Date; excluding, however, any such Change in or new Law that also constitutes or causes a change in or new Adjustment Standards, as well as any change in or new Law passed or adopted but not yet effective as of the date that is ninety (90) days prior to the Proposal Due Date.

Change of Control means any assignment, sale, financing, grant of security interest, transfer of interest or other transaction of any type or description, including by or through voting securities, asset transfer, contract, merger, acquisition, succession, dissolution, liquidation or otherwise, that results, directly or indirectly, in a change in possession of the power to direct or control or cause the direction or control of the management of Design-Build Team or a material aspect of its business. A change in the power to direct or control or cause the direction or control of the management of a shareholder, member, partner or joint venture member of Design-Build Team may constitute a Change of Control of Design-Build Team if such shareholder, member, partner or joint venture member possesses the power to direct or control or cause the direction or control of the management of Design-Build Team. Notwithstanding the foregoing, the following shall not constitute a Change of Control:

(a) A change in possession of the power to direct or control the management of Design-Build Team or a material aspect of its business due solely to a bona fide open market transactions in securities effected on a recognized public stock exchange, including such transactions involving an initial public offering;

(b) A change in possession of the power to direct or control the management of Design-Build Team or a material aspect of its business due solely to a bona fide transaction involving beneficial interests in the ultimate parent organization of a shareholder, member, partner or joint venture member of Design-Build Team, (but not if the shareholder, member, partner or joint venture member is the ultimate parent organization), unless the transferee in such transaction is at the time of the transaction suspended or debarred or subject to a proceeding to suspend or debar from bidding, proposing or contracting with any federal or State department or agency;

(c) An upstream reorganization or transfer of direct or indirect interests in Design-Build Team so long as there occurs no change in the entity with ultimate power to direct or control or cause the direction or control of the management of Design-Build Team;

(d) A transfer of interests between managed funds that are under common ownership or control other than a change in the management or control of a fund that manages or controls Design-Build Team;

(e) The exercise of minority veto or voting rights (whether provided by applicable Law, by Design-Build Team's organizational documents or by related member or shareholder agreements or similar agreements) over major business decisions of Design-Build Team, provided that if such minority veto or voting rights are provided by shareholder or similar agreements, GDOT has received copies of such agreements; or

Change Order means a written approval by GDOT, counter-signed by Design-Build Team, with respect to a GDOT Change or Change Request, which shall set forth any adjustments to the DB Contract Sum and/or the Contract Time, including on account of a Relief Event or Compensation Event, as provided in the Agreement.

Change Request means a written request from Design-Build Team seeking to change the character, quantity, quality, description, scope or location of any part of the Work, to modify the DB Documents.

Chief Executive Officer of Design-Build Team means the chief executive officer, president or other senior officer of Design-Build Team, or the governing body of Design-Build Team, in each case having authority to negotiate and resolve a Dispute with the Commissioner and bind Design-Build Team by his or her decision in regard to such Dispute.

Claim means (a) a demand by Design-Build Team, which is or potentially could be disputed by GDOT, for a time extension under the DB Documents, payment of money or damages from GDOTto Design-Build Team, or for payment from GDOTof a Compensation Amount or Termination Compensation, or (b) a demand by GDOT, which is or potentially could be disputed by Design-Build Team, for payment of money or damages from Design-Build Team to GDOT.

Claimant means any Person that would be entitled to protection of payment bond under Code Section 13-10-63, including any P&P Bonds.

Code has the meaning set forth in Recital C of the Agreement.

Commissioner means the Commissioner of GDOT appointed by the State Transportation Board and any successor thereto having substantially similar powers and authority.

Comparable Limited Access Highways means Highways that have full control of access, are divided, have grade separations at intersections and are in other respects substantially similar to the Project and associated facilities, as applicable. For purposes of this definition, determination of what portions of the Limited Access Highway system are substantially similar to the Project shall be based on any one or more of similar age, design, engineering, construction, topographical features, operating systems and features, or other features or situations, and/or based on a geographical area in which Highways have been or are

susceptible to being affected by a common event (such as but not limited to hurricane or tornado). The presence or absence of tolling and tolling facilities shall not be a factor in determining whether a Highway is substantially similar to the Project.

Compensation Amount means the amount of compensation to be paid to Design-Build Team for a Compensation Event as set forth and subject to the limitations of the Agreement, including Article 13.2 therein.

Compensation Event means any of the following events, subject to any limitations, claims submission requirements and other conditions set forth in the Agreement, provided that no relief will be available to the extent that (i) the events are within Design-Build Team's control, or are due to any wrongful act, wrongful omission, negligence, recklessness, willful misconduct, breach of contract or Law or violation of a Governmental Approval of any of the Design-Build Team-Related Entities; (ii) the events (or the effects of such events) could have been avoided by the exercise of reasonable caution, due diligence, or other reasonable efforts by Design-Build Team:

(a) Change in Law;

(b) Discriminatory Action;

(c) Material breach by GDOT of its material obligations under the Agreement or other DB Documents, including unreasonable failure to issue a certificate of Substantial Completion or a certificate of satisfaction of conditions precedent to Final Acceptance after Design-Build Team satisfies all applicable conditions and requirements for obtaining such a certificate;

(d) GDOT-Caused Delay, other than with respect to GDOT's failure to provide response to Design-Build Team Submittals as provided under clause (d) of the definition of a GDOT-Caused Delay;

(e) GDOT Change;

(f) A GDOT Release of Hazardous Material or remediation of Pre-Existing Hazardous Materials, but excluding the extent of any Design-Build Team Release of Hazardous Materials;

(g) Issuance by a court in a legal proceeding challenging any NEPA Approval or a temporary restraining order or other form of temporary injunction that prohibits prosecution of any material portion of the Work;

(h) Any change in the design concept of the Project or any portion thereof resulting from judicial or administrative action taken with respect to a legal challenge to any NEPA Approval as compared to the design concept indicated in the alternative that was the subject of the NEPA Approval, except to the extent the change in design concept had already been incorporated into Design-Build Team's design schematics as approved pursuant to this Agreement;

(i) Subject to clause (n) of this definition, failure to obtain, or unreasonable and unjustified delay in obtaining or otherwise maintaining once issued, a Governmental Approval from any Governmental Entity, except to the extent that such failure or delay results from failure

by any Design-Build Team-Related Entity to locate or design the Project or carry out the work in accordance with the NEPA Approval or other Governmental Approval (which failure may include (i) modification by or on behalf of Design-Build Team of the design concept included in the NEPA Approval, (ii) means or methods used by any Design-Build Team-Related Entity for carrying out the Work, or (iii) decision or action by or on behalf of Design-Build Team to use or acquire Additional Property);

(j) Latent defects in Existing Improvements, resulting in costs in excess of such amounts for which Design-Build Team is responsible including as set forth in Article 7.12 of the Agreement;

(k) GDOT's (i) lack of good and sufficient title to any parcel in the Existing Right of Way or the Property, to the extent it interferes with or adversely affects performance of Work (ii) inability or failure to obtain an interest (including by easement or other right of access) to real property not identified in the Proposed Right of Way and required for construction of the Project as demonstrated by Design-Build Team, exclusive of any Additional Properties, Project Specific Locations, or parcels that are solely for the convenience of Design-Build Team, to the extent it interferes with or adversely affects performance of Work, or (iii) the existence at any time following issuance of NTP 3 of any title reservation, condition, easement or encumbrance on any parcel in the Existing Right of Way or Property owned by GDOT, of record or not of record, to the extent it interferes with or adversely affects performance of Work, except any title reservations, conditions, easements or encumbrances (A) concerning Utilities or (B) caused, permitted or suffered by a Design-Build Team-Related Entity;

(l) Discovery of subsurface or latent physical conditions at the actual boring holes identified in the geotechnical reports included in the Reference Information Documents that differ materially from the subsurface conditions indicated in such geotechnical reports at such boring holes, excluding any such conditions known to Design-Build Team prior to the Proposal Due Date;

(m) Failure to obtain, or unreasonable and unjustified delay in obtaining, an approval from GDOT with respect to a Permitted Design Exception, except to the extent that such failure or delay in obtaining the GDOT approval results from failure by any Design-Build Team-Related Entity to carry out the Work in accordance with the DB Documents; or

(n) Failure to obtain, or unreasonable and unjustified delay in obtaining, a Governmental Approval required for a re-evaluation of a NEPA Approval due to an approved ATC; provided that Design-Build Team shall only be entitled to compensation for such failure or delay after expiration of the applicable GDOT Re-evaluation Period;

(o) Performance of work in or directly adjacent to the Construction Maintenance Limits or Operations and Maintenance Limits, as well as any work by Separate Contractors within the ROW, carried out by or on behalf of GDOT or a Governmental Entity, excluding any Utility Adjustment Work by a Utility Owner, that directly disrupts Design-Build Team's onsite Work, or other documented delays to the Critical Path of the Work directly caused a Separate Contractor working on behalf of GDOT or a Governmental Entitiy, all being subject to Article 17.4.2 of the Agreement; or

(p) Material modifications to the NEPA Approval as set forth pursuant to subpart (a) of the definition of NEPA Approval as provided in Exhibit 1 hereto, as a result of the NEPA Approval, and all approved supplements and re-evaluations pertaining to the Project as of the

Effective Date as provided in subpart (b) of such definition, provided that any such modifications are not the result of an ATC, Additional Properties, or attributable to Design-Build Team's design.

Compensation Event Notice means the written notice submitted by Design-Build Team in accordance with Article 13.2 of the Agreement.

Completed Payment Activity means a Payment Activity that Design-Build Team has certified as acceptable and ready for the following activity to begin.

Construction Commencement Date means for the date on which Design-Build Team first commences construction of the Project or such relative phase thereof.

Construction Documents means all shop drawings, working drawings, fabrication plans, material and hardware descriptions, specifications, construction quality control reports, construction quality assurance reports and samples necessary or desirable for construction of the Project and/or the Utility Adjustments included in the Construction Work, in accordance with the DB Documents.

Construction Maintenance Limits means the physical boundaries of Design-Build Team's maintenance responsibilities for the Construction Work, as identified in the Construction Maintenance Limits Plan.

Construction Maintenance Limits Plan has the meaning set forth in Section ~~2.7.1~~19.2 of the Technical Provisions.

Construction Work means all portions of the all Work necessary to build or construct, make, form, manufacture, furnish, install, supply, deliver or equip the Project and/or the Utility Adjustments. Construction Work includes landscaping.

Construction Phase has the meaning set forth in Section 23.1 of the Technical Provisions.

Construction Phasing Plan has the meaning set forth in Section 23.1 of the Technical Provisions.

Contract means any agreement, and any supplement or amendment thereto, by either (a) Design-Build Team with any other Person or Contractor, or (b) any Contractor with any Person or Subcontractor, to perform any part of the Work or provide any materials, equipment or supplies for any part of the Work, or any such agreement, supplement or amendment at a lower tier, between a Subcontractor and its lower tier sub-subcontractor or supplier. The term "Contract" excludes Utility Agreements and any agreement with SRTA or GDOT.

Contract Time means the time period provided for Design-Build Team's completion of the Work as provided in Article 3.3.1 of the Agreement.

Contractor means any Person, including any Subcontractor with whom Design-Build Team has entered into any Contract to perform any part of the Work or provide any materials, equipment or supplies for the Project and/or the Utility Adjustments included in the Construction Work, on behalf of Design-Build Team. The term "Contractor" excludes GDOT.

Cost to Cure means an appraisal method applied to estimate a proper adjustment for damages to a property that can be physically and economically corrected, as described in further detail in the GDOT ROW Manual.

Critical Path means the sequence of activities that must be completed on schedule for the entire Project to be completed on in accordance with the Milestone Deadlines. This is the longest duration path through the work plan, in terms of time, of logically connected activities on the Project Baseline Schedule ending with the relative Milestone Deadline in respect thereof.

CSC Host means the central computer system of SRTA or its contractor that supports customer service center account management functions for the Project.

Customer Groups means groups, Persons and entities having a perceived stake or interest in the Project, including: the media, elected officials, Governmental Entities, general public residing or working within the general vicinity of the Project or traveling within or across the limits of the Project, business owners within or adjacent to the Project corridor, Utility Owners, railroads, transportation authorities and providers, community groups, local groups (neighborhood associations, business groups, chambers of commerce, convention and visitors bureaus, contractors, etc.) and other Persons or entities affected by the Project, including those identified in Section 3.2 of the Technical Provisions.

Customer Service Center (CSC) means the facility used to service Users, including a database system that enables registration and maintenance of customer accounts.

Day or **day** means calendar day unless otherwise expressly specified.

DBE Performance Plan means Design-Build Team's plan for meeting the DBE participation goals set forth in Article 10.9.2 of the Agreement. The DBE Performance Plan is Exhibit 14 to the Agreement.

Decent, Safe and Sanitary (DSS) means the condition of a dwelling such that it meets applicable housing and occupancy codes.

Default Interest Rate means the statutory interest rate applicable to GDOT for contract payment defaults.

Default Termination Event means each of the Design-Build Team Defaults listed in Article 19.3.1 of the Agreement.

Defect means any Work that does not otherwise conform with the DB Documents, or otherwise is a defect, whether by design, construction, installation, affecting the condition, use, functionality or operation of any portion of the Work which, ordinary wear and tear excepted, would cause or have the potential to cause one or more of the following:

(a) a hazard, nuisance or other risk to public or worker health or safety, including the health and safety of Users;

(b) a structural deterioration of the affected Element or any other part of the Project;

(c) damage to a third party's property or equipment;

(d) damage to the Environment;

(e) failure of the affected Element or any other part of the Project to meet a Performance Requirement; or

(f) failure of an Element to meet the Target for a measurement record as set forth in the columns headed "Target" and "Measurement Record" in the Performance and Measurement Table Baseline.

Design-Build Agreement or **DB Agreement** means the agreement between the Proposer and GDOT requiring the Design-Build Team to design and construct the Project during the construction period.

Desin-Build Contract or **DB Contract Sum** means the total contract sum to be paid to Design-Build Team on account of the fully and properly performed Work as set forth in the Agreement, as adjusted pursuant to Supplemental Agreements (including to reflect adjustments for Compensation Events or Change Orders as provided in the Agreement), including without limitation all of Design-Build Team's profit, fees, financing costs and interest expense for Design-Build Team Debt, all costs of work and services, materials, equipment, supplies, general conditions costs, overhead and administrative expenses, professional fees and subconsultant costs, acquisition and other costs associated with acquisition of any Approved Properties, insurance and bond premiums, sales taxes, assessments, tariffs, permit, license and registration fees, and all other related costs and expenses.

Design-Build Documents or **DB Documents** means those documents as set forth in Article 1.2 of the Agreement and all such other agreements entered into by GDOT and Design-Build Team or any Design-Build Team-Related Entity, or otherwise executed by Design-Build Team or a Design-Build Team-Related Entity and delivered to SRTA, with respect to or in connection with this Agreement, including without limitation Supplemental Agreements, the Design-Build Guaranty, or any Master Utility Adjustment Agreement.

Design-Build Period means the period commencing with NTP 1 and ending when Design-Build Team achieves Final Acceptance.

Design-Build Team or **DB Team** means the party identified as such in the opening paragraph of this Agreement, together with its permitted successors and assigns.

Design-Build Team Default or **DB Team Default** has the meaning set forth in Article 17.1.1 of the Agreement.

Design-Build Team's Interest or **DB Team's Interest** means all right, title, and interest of Design-Build Team in, to, under or derived from the Agreement and the other DB Documents.

Design-Build Team-Related Entities or **DB Team Team-Related Entities** means (a) Design-Build Team, (b) Design-Build Team's shareholders, partners, joint venture members and/or members, (c) the Contractor and all other Subcontractors (including Suppliers), (d) any other Persons performing any of the Work, (e) any other Persons for whom Design-Build Team may be legally or contractually responsible, and (f) the employees, agents, officers, directors, shareholders, representatives, consultants, successors and assign of any of the foregoing; provided, however, that GDOT shall be considered a Design-Build Team-Related Entity.

Design-Build Team Release(s) of Hazardous Material or **DB Team Release(s) of Hazardous Material** means (a) Release(s) of Hazardous Material, or the exacerbation of any such release(s), attributable to the culpable actions, culpable omissions, negligence, willful misconduct, or breach of applicable Law or contract by any Design-Build Team-Related Entity; (b) Release(s) of Hazardous Materials arranged to be brought onto the Site or elsewhere by any Design-Build Team-Related Entity; regardless of cause, or (c) use, containment, storage, management, handling, transport and disposal of any Hazardous Materials by any Design-Build Team-Related Entity in violation of the requirements of the DB Documents or any applicable Law or Governmental Approval

Design-Build Team Vehicle or **DB Team Vehicle** means any vehicle authorized by Design-Build Team performing construction, maintenance or operation of the Project, or other related activity.

Design Documents means all drawings (including plans, profiles, cross-sections, notes, elevations, typical sections, details and diagrams), specifications, reports, studies, calculations, electronic files, records and submittals necessary for, or related to, the design of the Project and/or the Utility Adjustments included in the Design Work and/or the Construction Work.

Design Speed means the speed used to determine the various geometric design features of the roadway.

Design Submittal Guide shall have the meaning set forth in Section 23.1 of the Techncial Provisions.

Design Work means all Work of design, engineering or architecture for the Project or Utility Adjustments.

Deviation means any proposed or actual change, deviation, modification, alteration or exception from this Agreement, the Technical Provisions, Technical Documents or Governmental Approvals.

Directive Letter means the letter described in Article 14.3 of the Agreement.

Disadvantaged Business Enterprise or **DBE** has the meaning set forth 49 CFR 23 and further described in Attachment 6 to Exhibit 8 to the Agreement.

Discipline Groups has the meaning set forth in Section 23.3 of the Technical Provisions.

Discriminatory or **Discriminatory Action** means (a) materially more onerous application to Design-Build Team or the Project of changes or additions to Technical Provisions or Technical Documents than the application thereof to other Comparable Limited Access Highways, or (b) selective application of changes or additions to Technical Provisions or Technical Documents to Design-Build Team or the Project and not to other Comparable Limited Access Highways. Notwithstanding the foregoing, the following actions are not Discriminatory or Discriminatory Actions: (i) any such application in response to any act or omission by or on behalf of Design-Build Team in violation of Law or the DB Documents; (ii) Safety Compliance; (iii) any such application in response to a directive by the U.S. Department of Homeland Security or comparable State agency, unless such directive is directed solely at or solely affects the Project and such application requires specific changes in Design-Build Team's normal

design, construction, operation or maintenance procedures in order to comply; and (iv) any other actions necessary to address potential safety concerns arising from a specific condition or feature peculiar to the Project.

Dispute means any Claim, dispute, disagreement or controversy between GDOT and Design-Build Team concerning their respective rights and obligations under the DB Documents, including concerning any alleged breach or failure to perform and remedies.

Dispute Resolution Procedures means the procedures for resolving Disputes set forth in Article 17.7 of the Agreement.

Early Adjustment means a Utility identified as such in Section 6 of the Technical Provisions.

Early Termination Date means the effective date of termination of the Agreement for any reason prior to the stated expiration Final Acceptance Deadline, as specified in the relevant provisions of Article 19.

Effective Date means the date of the Agreement or such other date as shall be mutually agreed upon in writing by GDOT and Design-Build Team.

Electronic Toll Collection System or **ETCS** means the electronic toll collection system used for the collection of tolls based on the automatic identification and classification of vehicles using electronic systems, including its components, systems and subsystems, the hardware and physical infrastructure, and the software to be incorporated into the Project.

Element means an individual component, system or subsystem of the Work, included as an independent line item as provided on the approved Schedule of Values.

Emergency means an unforeseen event affecting the Project whether directly or indirectly which (a) causes or has the potential to cause disruption to the free flow of traffic on the Project or a threat to the safety of the public; (b) is an immediate or imminent threat to the long term integrity of any part of the infrastructure of the Project, to the Environment, to property adjacent to the Project or to the safety of Users or the traveling public; or (c) is recognized by the Georgia Department of Public Safety as an emergency.

Environment means air, soils, surface waters, groundwater, land, stream sediments, surface or subsurface strata, biological resources, including endangered, threatened and sensitive species, natural systems, including ecosystems, and historic, archeological and paleontological resources.

Environmental Approvals means all Governmental Approvals arising from or required by any Environmental Law in connection with development of the Project, including approvals and permits required under NEPA.

Environmental Commitment (also Environmental Permits, Issues and Commitments) means an environmental requirement that must be fulfilled before, during or after construction. Environmental Commitments include commitments to avoid impacts in specified areas, complete environmental investigations before construction impacts, or to perform specified actions after completion of construction.

Environmental Law means any Law applicable to the Project or the Work regulating or imposing liability or standards of conduct that pertains to the Environment, Hazardous Materials, contamination of any type whatsoever, or environmental health and safety matters, and any lawful requirements and standards that pertain to the Environment, Hazardous Materials, contamination of any type whatsoever, or environmental health and safety matters, set forth in any permits, licenses, approvals, plans, rules, regulations or ordinances adopted, or other criteria and guidelines promulgated, pursuant to Laws applicable to the Project or the Work, as such have been or are amended, modified, or supplemented from time to time (including any present and future amendments thereto and reauthorizations thereof) including those relating to:

(a) The manufacture, processing, use, distribution, existence, treatment, storage, disposal, generation, and transportation of Hazardous Materials;

(b) Air, soil, surface and subsurface strata, stream sediments, surface water, and groundwater;

(c) Releases of Hazardous Materials;

(d) Protection of wildlife, Threatened or Endangered Species, sensitive species, wetlands, water courses and water bodies, historical, archeological, and paleontological resources, and natural resources;

(e) The operation and closure of underground storage tanks;

(f) and safety of employees and other persons; and

(g) Notification, documentation, and record keeping requirements relating to the foregoing.

Without limiting the above, the term “Environmental Laws” shall also include the following:

(i) The National Environmental Policy Act (42 U.S.C. §§ 4321 *et seq.*), as amended;

(ii) The Comprehensive Environmental Response, Compensation, and Liability Act (42 U.S.C. §§ 9601 *et seq.*), as amended;

(iii) The Solid Waste Disposal Act, as amended by the Resource Conservation and Recovery Act (42 U.S.C. §§ 6901 *et seq.*);

(iv) The Emergency Planning and Community Right to Know Act of 1986 (42 U.S.C. §§ 11001 *et seq.*), as amended;

(v) The Clean Air Act (42 U.S.C. §§ 7401 *et seq.*), as amended;

(vi) The Federal Water Pollution Control Act, as amended by the Clean Water Act (33 U.S.C. §§ 1251 *et seq.*);

(vii) The Resource Conservation and Recovery Act (42 U.S.C. §§ 6901, *et seq.*), as amended;

(viii) The Toxic Substances Control Act (15 U.S.C. §§ 2601 *et seq.*), as amended;

(ix) The Hazardous Materials Transportation Act (49 U.S.C. §§ 1801 *et seq.*), as amended;

(x) The Oil Pollution Act (33 U.S.C. §§ 2701, *et. seq.*), as amended;

(xi) The Federal Insecticide, Fungicide and Rodenticide Act (7 U.S.C. §§ 136 *et seq.*), as amended;

(xii) The Federal Safe Drinking Water Act (42 U.S.C. §§ 300 *et seq.*), as amended;

(xiii) The Federal Radon and Indoor Air Quality Research Act (42 U.S.C. §§ 7401 *et seq.*), as amended;

(xiv) The Occupational Safety and Health Act (29 U.S.C. §§ 651 *et seq.*);

(xv) The Endangered Species Act (16 U.S.C. §§ 1531 *et seq.*), as amended;

(xvi) The Fish and Wildlife Coordination Act (16 U.S.C. §§ 661 *et seq.*), as amended;

(xvii) The National Historic Preservation Act (16 U.S.C. §§ 470 *et seq.*), as amended;

(xviii) The Coastal Zone Management Act (33 U.S.C. §§ 1451 *et seq.*), as amended;

(xix) Georgia Water Quality Act (O.C.G.A. § 12-5-20);

(xx) Georgia Erosion and Sedimentation Act (O.C.G.A. § 12-7-1), as amended;

(xxi) Best Management Practices (O.C.G.A. § 12-7-6(b)(15)); and

(xxii) Georgia Underground Storage Act (O.C.G.A. § 12-13-1)).

Escrow Agent has the meaning set forth in Article 22.5.2 of the Agreement.

Estate for Years has the meaning set forth in Recital C of the Agreement.

Exhibits means all exhibits, riders, and other attachments to the DB Documents, including without limitation Volume 1, Volume 2, and Volume 3, as well as, any of the aforementioned, which are incorporated into any DB Documents by reference, and all amendments, modifications, and supplements thereto.

Existing Improvements means the existing highway, bridge, and related improvements as of the date that is ninety (90) days prior to the Proposal Due Date within the Construction Maintenance Limits.

Existing Right of Way or **Existing ROW** means any real property (which term is inclusive of all estates and interests in real property), improvements and fixtures (i) as provided in Article 2.2.1.1(a) of the Agreement and more specifically described and identified as "Existing ROW" within Exhibit 4, in which GDOT has a property right or interest, and (ii) any Proposed Right of Way, which GDOT at any time after the Effective Date, shall acquire a leasehold estate or other property interest. The term specifically includes all air space, surface rights and subsurface rights within the limits of the Existing Right of Way.

Existing Utility Property Interest means any right, title or interest in real property (e.g., a fee or an easement) claimed by a Utility Owner as the source of its right to maintain an existing Utility in such real property, which is compensable in eminent domain.

Evaluation Score means the numerical score resulting from the adjectival evaluation and numerical conversion of a particular portion of the Proposals.

Federal Requirements means the provisions required to be part of federal-aid construction contracts, including the provisions set forth in Exhibit 8 to the Agreement.

Final Acceptance means the occurrence of all the events and satisfaction of all the conditions set forth in GDOT Standard Specification 105.16.

Final Acceptance Date means the date upon which Design-Build Team has satisfied all conditions of and for Final Acceptance and GDOT has certified same.

Final Design shall have the meaning set forth in Article 3.3.1.2 of the DB Agreement.

Final Plans means the Design Documents which provide the complete and final documents necessary for the related to construction, operations, and maintenance of the Project or any portion thereof including any Utility Adjustments required by the Project.

Final ROW Lines means the final location of all Right of Way within the project limits.

Fiscal Year means the twelve (12) month fiscal year used by GDOT for budgeting purposes.

Float means the amount of time that any given activity or logically connected sequence of activities shown on the Preliminary Baseline Schedule and Project Baseline Schedule, as the case may be, may be delayed before it will affect completion of any Work as required to achieve any Milestone Schedule Deadline, including the Substantial Completion Deadline and Final Acceptance Deadline.

Force Majeure Event means the occurrence of any of the following events that materially and adversely affects performance of Design-Build Team's obligations, provided that such events (or the effects of such events) could not have been avoided by the exercise of caution, due diligence, or reasonable efforts by Design-Build Team: (a) war (including civil war and revolution), invasion, armed conflict, violent act of foreign enemy, military or armed blockade, or military or armed takeover of the Project, in each case occurring within the State; (b) any act of terrorism or sabotage that causes direct physical damage to the Project; (c) nuclear explosion or contamination, in each case occurring within the State; (d) riot and civil commotion on or in the immediate vicinity of the Project; (e) fire, explosion, flood, earthquake, hurricane, or tornado, in each case that causes direct physical damage to the Project; or (f) national or statewide (i.e. State of Georgia) strike that has a direct adverse impact on Design-Build Team's ability to obtain materials, equipment or labor for the Project.

Formal Consultation means any discussions or correspondence about listed species that takes place subsequent to FHWA submitting a written request for consultation and USFWS submitting a written response acknowledging initiation or consultation.

GDOT means the Georgia Department of Transportation, as set forth in the recitals of the Agreement, and any entity succeeding to the powers, authorities and responsibilities of GDOT invoked by or under the DB Documents.

GDOT-Caused Delay means any of the following events, to the extent they result in a material delay or interruption in performance of any material obligation under the Agreement, and provided such events are beyond Design-Build Team's control and are not due to any act, omission, negligence, recklessness, willful misconduct, breach of contract or Law of any of the Design-Build Team-Related Entities, solely to the extent not concurrent or overlapping with any delay attributable to Design-Build Team, and further provided that such events (or the effects of such events) could not have been avoided by the exercise of caution, due diligence, or reasonable efforts by Design-Build Team, and with respect to any Compensation Event, solely to the extent that the cumulative effect of any such delays as set forth below have or shall result in delays, after taking into account any available Float, in excess of ninety (90) days:

(a) Failure of GDOT to issue NTP 1 as provided pursuant to Article 3.3.1.1 of the Agreement and/or failure to issue NTP 2 or NTP 3 as provided pursuant to Article 3.3.1.2 and Article 3.3.1.3 of the Agreement;

(b) GDOT Changes;

(c) Failure of GDOT to provide the GDOT-Provided Approvals within the time periods set forth in Section 4.2.2 of the Technical Provisions, subject to Article 6.2.1 of the Agreement; or

(d) Failure of GDOT to provide responses to proposed schedules, plans, Design Documents, condemnation and acquisition packages, and other Submittals and matters submitted to GDOT after the Effective Date for which response is required under the DB Documents as an express prerequisite to Design-Build Team's right to proceed or act, within the time periods (if any) indicated in the DB Documents, or if no time period is indicated, within a reasonable time, taking into consideration the nature, importance and complexity of the submittal or matter, following delivery of written notice from Design-Build Team requesting such action in accordance with the terms and requirements of the DB Documents;

(e) Failure of GDOT to provide Design-Build Team with access to the Right of Way as required; or

(f) The occurrence of a GDOT Release of Hazardous Materials.

Any proper suspension of Work pursuant to Article 17.3.7 of the Agreement shall not be considered a GDOT -Caused Delay.

GDOT Change means:

(a) Any change in the scope of the Work or terms and conditions of the Technical Provisions or Technical Documents (including changes in the standards applicable to the Work) that GDOT has directed Design-Build Team to perform through a Supplemental Agreement as described in Article 14.1 of the Agreement or a Directive Letter pursuant to Article 14.3 of the Agreement; and

(b) Any other event that the DB Documents expressly state shall be treated as a GDOT Change.

GDOT Claims Account means the designated account for the benefit of GDOT and Design-Build Team to be administered and maintained by GDOT for payments on account of Claims as required by GDOT pursuant to Article 17.3.4.3 of the Agreement.

GDOT Default has the meaning set forth in Article 17.5.1 of the Agreement.

GDOT Re-evaluation Period means the specified amount of time set forth as a condition in an approved ATC for GDOT to obtain the applicable Governmental Approval required for a re-evaluation of the NEPA Approval, prior to Design-Build Team being entitled to a Relief Event or Compensation Event; provided, however, that such time shall commence upon the date that GDOT has received a full and complete document package from Design-Build Team required for GDOT to process such re-evaluation.

GDOT Recoverable Costs means:

(a) The costs of any assistance, action, activity or Work undertaken by GDOT which Design-Build Team is liable for or is to reimburse under the terms of the DB Documents, including the charges of third party contractors, and reasonably allocated wages, salaries, compensation and overhead of GDOT staff and employees, performing such action, activity or Work (exclusive or ordinary and customary administration and review activities by GDOT employees or consultants (except for such consultant fees and expenses as expressly reserved in the Agreement); plus

(b) Third-party costs GDOT incurs to publicly procure any such third party contractors; plus

(c) Reasonable fees and costs of attorneys (including the reasonably allocable fees and costs of the Georgia Attorney General's Office), financial advisors, engineers, architects, insurance brokers and advisors, investigators, traffic and revenue consultants, risk management consultants, other consultants, and expert witnesses, as well as court costs and other litigation costs, in connection with any such assistance, action, activity or Work, including in connection with defending claims by and resolving disputes with third party contractors; plus

(d) Any expense or cost for which GDOT is to be reimbursed by Design-Build Team pursuant to the express terms of the Agreement; including without limitation Articles 2.2.3.2, 6.2.5, 7.5.7.2, 16.1.2.4, 16.6.7, 17.3.3.2, 17.3.8.3, 17.3.11.2, and 22.3.3; plus

(e) Interest on all the foregoing sums at the Default Interest Rate from the date due under the applicable terms of the DBA Documents and continuing until paid.

GDOT Release(s) of Hazardous Materials means, except as provided below, the introduction in, on or under the Construction Maintenance Limits or Operation and Maintenance Limits of Hazardous Material directly by GDOT, and their respective agents and contractors (excluding Design-Build Team). GDOT Release(s) of Hazardous Material excludes, however, (i) any Hazardous Materials so introduced that are in or part of construction materials and equipment incorporated into the Project and (ii) any Hazardous Materials identified in the phase 1 investigation and report described in clause (i) of the definition of Pre-Existing Hazardous Materials.

GDOT Standard Specifications means the Georgia Department of Transportation Standard Specifications, Construction of Transportation Systems.

General Purpose Lanes means Limited Access Highway lanes within the Existing Right of Way other than the Managed Lanes.

Geotechnical Engineering Reports means the reports which meet the requirements described in Section 8.2 of the Technical Provisions.

GEPA Approval means the (a) GEPA document as approved by Georgia EPD including any studies, reports, Environmental Commitments, and all other procedural requirements and documents required for Georgia EPD approval for the Project or a portion of the Project, as (b) may be modified pursuant to all approved supplements and re-evaluations pertaining to the Project.

Good Industry Practice means the exercise of the degree of skill, diligence, prudence and foresight which would reasonably and ordinarily be expected from time to time from a skilled and experienced designer, engineer, or constructor, seeking in good faith to comply with its contractual obligations, complying with the DB Documents, all applicable Laws and Governmental Approvals, and engaged in the same type of undertaking in the United States under similar circumstances and conditions.

Governmental Approval means any permit, license, consent, concession, grant, franchise, authorization, waiver, variance or other approval, guidance, protocol, mitigation agreement, special provision, or memoranda of agreement/understanding, and any amendment or modification of any of them provided by Governmental Entities including State, local, or federal regulatory agencies, agents, or employees, which authorize or pertain to the Project or the Work.

Governmental Entity means any federal, State or local government and any political subdivision or any governmental, quasi-governmental, judicial, public or statutory instrumentality, administrative agency, authority, body or entity other than GDOT.

Guarantor means any Person that is the obligor under any guaranty in favor of GDOT required under the Agreement, including any Design-Build Guaranty.

Hazardous Materials means any element, chemical, compound, material or substance, whether solid, liquid or gaseous, which at any time is defined, listed, classified or otherwise regulated in any way under any Environmental Laws, or any other such substances or conditions (including mold and other mycotoxins or fungi) which may create any unsafe or hazardous condition or pose any threat to human health and safety. "Hazardous Materials" includes the following:

(a) Hazardous wastes, hazardous material, hazardous substances, hazardous constituents, and toxic substances or related materials, whether solid, liquid, or gas, including substances defined as or included in the definition of "hazardous substance", "hazardous waste", "hazardous material", "extremely hazardous waste", "acutely hazardous waste", "radioactive waste", "radioactive materials", "bio-hazardous waste", "pollutant", "toxic pollutant", "contaminant", "restricted hazardous waste", "infectious waste", "toxic substance", "toxic waste", "toxic material", or any other term or expression intended to define, list or classify substances by reason of properties harmful to health, safety or the indoor or outdoor environment (including

harmful properties such as ignitability, corrosivity, reactivity, carcinogenicity, toxicity, reproductive toxicity, "TCLP" toxicity" or "EP toxicity" or words of similar import under any applicable Environmental Laws);

(b) Any petroleum, including crude oil and any fraction thereof, and including any refined petroleum product or any additive thereto or fraction thereof or other petroleum derived substance; and any waste oil or waste petroleum byproduct or fraction thereof or additive thereto;

(c) Any drilling fluids, produced waters and other wastes associated with the exploration, development or production of crude oil, natural gas or geothermal resources;

(d) Any flammable substances or explosives;

(e) Any radioactive materials;

(f) Any asbestos or asbestos-containing materials;

(g) Any lead and lead-based paint;

(h) Any radon or radon gas;

(i) Any methane gas or similar gaseous materials;

(j) Any urea formaldehyde foam insulation;

(k) Electrical equipment which contains any oil or dielectric fluid containing regulated levels of polychlorinated biphenyls;

(l) Pesticides;

(m) Any other chemical, material or substance, exposure to which is prohibited, limited or regulated by any Governmental Entity or which may or could pose a hazard to the health and safety of the owners, operators, Users or any Persons in the vicinity of the Project or to the indoor or outdoor Environment; and

(n) Soil, or surface water or ground water, contaminated with Hazardous Materials as defined above.

Hazardous Materials Management means procedures, practices and activities to address and comply with Environmental Laws and Environmental Approvals with respect to Hazardous Materials encountered, impacted, caused by or occurring in connection with the Project or the Work, as well as investigation and remediation of such Hazardous Materials. Hazardous Materials Management may include sampling, stock-piling, storage, backfilling in place, asphalt batching, recycling, treatment, clean-up, remediation, transportation and/or off-site disposal of Hazardous Materials, whichever approach is effective, most cost-efficient and authorized under applicable Law.

Highway means a travel way for vehicular traffic that is included in the State or federal highway system.

Highway Service Systems means GDOT's or a Governmental Entity's lighting and electrical systems, traffic control systems, communications systems and irrigation systems serving street or highway purposes (including ITS and Intelligent Vehicle Highway System facilities).

Historic Property means any prehistoric or historic district, site, building, structure or object included in, or eligible for inclusion in, the National Register or Historic Places.

HOV means a passenger vehicle carrying a specified minimum number of passengers. HOVs include carpools, vanpools and buses.

Immigration Act means the Georgia Immigration & Compliance Act, O.C.G.A. § 13-10-90, *et seq.* as set forth in Article 10.6.4 of the Agreement.

Incident means any unplanned event during the course of construction.

Incident Management Plan means Design-Build Team's plan for detection and response to Incidents or Emergencies, as part of the PMP.

Indemnified Parties means GDOT, the State, the State Transportation Board, and their respective successors, assigns, officeholders, officers, directors, commissioners, agents, representatives, consultants and employees. Indemnified Party shall mean any of the aforementioned.

Informal Consultations means any discussions or correspondence about listed species that take place before the beginning of Formal Consultations.

ITP or **Instructions to Proposers** means the document that provides instructions to be followed by Proposers in their responses to the RFP.

Insurance Policies means all of the insurance policies Design-Build Team is required to carry pursuant to Article 16.1 and Exhibit 17 of the Agreement.

Intellectual Property means all current and future legal and/or equitable rights and interests in know-how, patents (including applications), copyrights (including moral rights), trade marks (registered and unregistered), service marks, trade secrets, designs (registered and unregistered), utility models, circuit layouts, plant varieties, business and domain names, inventions, solutions embodied in technology, and other intellectual activity, and applications of or for any of the foregoing, subsisting in or relating to the Project, Project design data or Project traffic data. Intellectual Property includes toll-setting and traffic management algorithms, and software used in connection with the Project (including but not limited to software used for management of traffic on the Project), and Source Code. Intellectual Property also includes the trade secret information contained in proprietary pricing information. Intellectual Property is distinguished from physical construction and equipment itself and from drawings, plans, specifications, layouts, depictions, manuals and other documentation that disclose Intellectual Property.

Intelligent Transportation System (ITS) has the meaning set forth in Section 17 of the Technical Provisions.

Intelligent Vehicle Highway System (IVHS) means smart vehicle and smart highway technologies to improve the safety, efficiency and environmental impact of highway facilities.

Interim Design means any submittal of Design Documents after the Preliminary Plans have been accepted but prior to submittal of Final Plans for the entire Project or any approved Project segment. Interim Designs are intended to resolve conflicts and unresolved comments from the Preliminary Plans submittal.

Key Contract means any one of the following Contracts for Work that Design-Build Team or Design-Build Team's Contractor's causes to be performed:

(a) All prime construction Contracts;

(b) All project or program management services, architectural design, or engineering Contracts; and

(c) All other Contracts with a single Contractor or Subcontractor which individually or in the aggregate total in excess of $25 million.

Key Contractor means any Contractor or Subcontractor, as the case may be, under any Key Contract.

Key Personnel means those individuals appointed by Design-Build Team and approved by GDOT from time to time to fill the "Key Personnel" positions. The specific individuals appointed by Design-Build Team and approved by GDOT to initially fill certain of the Key Personnel positions are identified in Exhibit 2 to the Agreement.

Landscape Enhancement Plan has the meaning set forth in Section 15.2.2 of the Technical Provisions.

Latent Defects Deductible has the meaning set forth in Article 7.12.2.1 of the Agreement.

Law or **Laws** means (a) any statute, law, code, regulation, ordinance, rule or common law, (b) any binding judgment (other than regarding a Claim or Dispute), (c) any binding judicial or administrative order or decree (other than regarding a Claim or Dispute), (d) any written directive, guideline, policy requirement or other governmental restriction (including those resulting from the initiative or referendum process, but excluding those by GDOT within the scope of its administration of the DBA Documents or in the normal course of its adoption of new or revised technical standards pursuant to Article 7.2.5 of the Agreement) or (e) any similar form of decision of or determination by, or any written interpretation or administration of any of the foregoing by, any Governmental Entity, in each case which is applicable to or has an impact on the Project or the Work, whether taking effect before or after the Effective Date, including Environmental Laws. "Laws", however, excludes Governmental Approvals.

Lead Contractor shall mean the entity designated as a Proposer's "Lead Contractor" in its SOQ. There may only be one Lead Contractor per Proposer team.

Lead Engineering Firm shall mean the entity designated as a Proposer's "Lead Engineering Firm" in its SOQ. There may only be one Lead Engineering Firm per Proposer team.

Line or **line** means, in the context of Utilities or Highway Service Systems, a line, pipeline, conduit or cable used for utility purposes, including underground, surface or overhead facilities.

Liquidated Damages means such liquidated damages as may accrue and be due and payable by Design-Build Team to GDOT as set forth under Article 17.4 of the Agreement and as set forth under Exhibit 18 thereto.

Loss or **Losses** means any loss, damage, injury, liability, obligation, cost, response cost, expense (including attorneys', accountants' and expert witnesses' fees and expenses (including those incurred in connection with the enforcement of any indemnity or other provision of the Agreement)), fee, charge, judgment, penalty or fine. Losses include injury to or death of persons, damage or loss of property, and harm or damage to natural resources.

Maintenance Acceptance means the occurrence of all the events and satisfaction of all the conditions set forth in Article 7.7.3.

Maintenance Acceptance Deadline means the deadline for achieving Maintenance Acceptance, as set forth in the Milestone Schedule, as such deadline may be extended for any Relief Event or Change Order as and to the extend provided in the Agreement.

Major Culvert means a culvert that provides an opening of more than 35 square feet in a single or multiple installations. A major culvert may consist of a single round pipe, pipe arch, open or closed-bottom box, bottomless arch, or multiple installations of these structures placed adjacent or contiguous as a unit. Certain major culverts are classified as bridges when they provide an opening of more than 20 feet, measured parallel to the roadway; such culverts may be included in the bridge inventory.

Major Non-Participating Member means a Proposer's Lead Contractor and Lead Engineering Firm. If any of these entities qualify as a Participating Member, then that entity shall not be treated as a Major Non-Participating Member. Major Non-Participating Members are not considered Contractors to Proposer regardless of their role in the performance of Project-related services.

Major River Crossing means a crossing with a 100-year storm event flow in excess of 10,000 cubic feet per second (cfs).

Managed Lanes means Limited Access Highway lanes located within the Property that increase traffic efficiency by using various design and operational strategies (including congestion priced tolls), including the Electronic Toll Collection System for such lanes.

Management Plans means all of the management plans identified in Section 2 of the Technical Provisions.

Memorandum of Understanding (MOU) means a formal agreement between GDOT and one or more agencies, organizations or providers.

Milestone Deadline shall have the same meaning as any Milestone Schedule Deadline.

Milestone Schedule means the schedule of deadlines set forth in Exhibit 9 to the Agreement, as may be adjusted upon approval of the Project Baseline Schedule as set forth in

Article 3.3 of the Agreement and as may be further adjusted pursuant to any Supplemental Agreement, including on account of any Relief Events.

Milestone Schedule Deadline means the critical milestones for commencement and/or completion of the Work as set forth in Exhibit 9 to the Agreement, including without limitation the Substantial Completion Deadline, Final Acceptance Deadline, as may be adjusted upon approval of the Project Baseline Schedule as set forth in Article 3.3 of the Agreement, and as further adjusted pursuant to any Supplemental Agreement, including on account of any Relief Events.

Minor Culvert means any culvert not classified as a Major Culvert.

Mobilization means Work to establish and remove offices, plants, and facilities; and to move personnel, equipment, and supplies to and from the Project site to begin Work or complete Work.

NaviGAtor Contractor means that certain Separate Contractor engaged by GDOT to provide the NaviGAtor System to be included and integrated into the ITS to be incorporated into the Project.

NaviGAtor Integration Deadline means that certain Milestone Schedule Deadline, as set forth in the Milestone Schedule, as may be adjusted by the Project Baseline Schedule, for completion of such portions of the Work as necessary and required to allow the NaviGAtor Contractor to commence the NaviGAtor Work.

NaviGAtor System means the "NaviGAtor" advanced transportation management system to be included as a part of the ITS as set forth pursuant to Section 17.1.3 of the Technical Provisions.

NaviGAtor Work means the work to be provided by the NaviGAtor Contractor, coordinated with the Work, for completion of the NaviGAtor System for the Project.

NEPA means the National Environmental Policy Act, 42 U.S.C. § 4321 *et seq.*, as amended and as it may be amended from time to time.

NEPA Approval means the (a) NEPA document as approved by FHWA including any studies, reports, Environmental Commitments, and all other procedural requirements and documents required for FHWA approval for the Project or a portion of the Project, as (b) may be modified pursuant to all approved supplements and re-evaluations pertaining to the Project.

NEPA Finality Date means the date NEPA Approval becomes final and non-appealable and the federal statute of limitations for commencing legal action to challenge the validity of any NEPA Approval has expired.

Nonconforming Work means Work that does not conform to the requirements of the DB Documents, the Governmental Approvals, applicable Law or the Design Documents.

Notice of Termination for Convenience means written notice issued by GDOT to Design-Build Team terminating the Agreement in whole or in part for convenience.

NTP means a written notice issued by GDOT to Design-Build Team authorizing Design-Build Team to proceed with the portion or phase of the Work as being designated as subject to such notice to proceed in the Preliminary Baseline Schedule, the Project Baseline Schedule, or otherwise in the DBA Documents, including without limitation NTP 1, NTP 2, and NTP 3.

NTP 1 means a written notice issued by GDOT to Design-Build Team authorizing Design-Build Team to proceed with the portion of the Work described in Article 3.3.1.1 of the Agreement.

NTP 2 means a written notice issued by GDOT to Design-Build Team authorizing Design-Build Team to proceed with the portion of the Work described in Article 3.3.1.2 of the Agreement.

NTP 3 means a written notice issued by GDOT to Design-Build Team pursuant to Article 3.3.1.3 of the Agreement authorizing Design-Build Team to proceed with the remaining Work and other activities pertaining to the Project.

NTP 1 Conditions Deadline means the outside date set forth in the Milestone Schedule (or the Project Baseline Schedule as to the extent such outside date is adjusted thereby) by which Design-Build Team is obligated under the Agreement to satisfy all conditions to issuance of NTP 1, as such deadline may be extended for Relief Events from time to time pursuant to the Agreement.

NTP 2 Conditions Deadline means the outside date set forth in the Milestone Schedule (or the Project Baseline Schedule as to the extent such outside date is adjusted thereby) by which Design-Build Team is obligated under the Agreement to satisfy all conditions to issuance of NTP 2, as such deadline may be extended for Relief Events from time to time pursuant to the Agreement.

NTP 3 Conditions Deadline means the outside date set forth in the Milestone Schedule (or the Project Baseline Schedule as to the extent such outside date is adjusted thereby) by which Design-Build Team is obligated under the Agreement to satisfy all conditions to issuance of NTP 3, as such deadline may be extended for Relief Events from time to time pursuant to the Agreement.

Open Book Basis means allowing the relevant Party to review all underlying assumptions and data associated with the issue in question, including, but not limited to, assumptions as to costs of the Work, schedule, composition of equipment spreads, equipment rates, labor rates, productivity, estimating factors, design and productivity allowance, contingency and indirect costs, risk pricing, discount rates, interest rates, inflation and deflation rates, and other items reasonably required by the relevant Party.

Open Government Laws mean, collectively, the Georgia Open Records Act, Ga. Code Ann. §§ 50-18-70 *et seq.*, Section 32-2-80(a)(40) of the Code and Section 672-17.06 of the Rules, as amended from time to time.

Open Road Toll (ORT) means toll collection conducted (a) exclusively via vehicle identification with transponders and/or video capture of the license plate and (b) in an open multilane free-flow highway environment with no constraints on speed, vehicle type or vehicle location.

Optical Character Recognition (OCR) means the process of converting an image to text.

Owner Verification Tests (OVT) means the material tests performed in accordance with the applicable GDOT test method to verify the accuracy of the tests performed by Design-Build Team and pursuant to the approved Quality Management Plan to ensure that only materials of specified quality or better are accepted and incorporated into the Project.

P&P Bonds means the bonds meeting the requirements of Article 16.2.1 of the Agreement.

P&P Obligor means the Person identified as the obligor or account party in the P&P Bonds, as applicable.

Participating Agency means a public, quasi-public, or private agency that has agreed to cooperate with and assist Design-Build Team during an Emergency.

Participating Member means (a) if the Proposer is a joint venture, partnership, or limited liability company, each member of the joint venture, partnership or limited liability company; or (b) if the Proposer is a corporation or other corporate entity, the Proposer.

Party means Design-Build Team or GDOT, as the context may require, and "**Parties**" means Design-Build Team andGDOT, collectively.

Payment Activity means completion of an Element of the Work for which payment on account of the DB Contract Sum shall be due, subject to the terms of this Agreement and as follows:

(a) The first Payment Request (after NTP 1) may include the Payment and Perforamnce Bond amounts;

(b) The first Payment Request (after NTP 3) may include up to 50% of the amount for Mobilization set forth in the Proposal, or 3% of the of the construction cost set forth in the Schedule of Values, whichever is less;

(c) When 5% of the construction cost set forth in the approved Schedule of Values is incurred, the next Payment Request may include up to 100% of the amount of Mobilization set forth in the Proposal, or 3% of the construction cost set forth in the approved Schedule of Values, whichever is less, minus any previous payments;

(d) Design-Build Team's indirect costs such as administration, design, contingencies, site cleanup and maintenance, access, off site access roads and security costs related to design-build costs shall be prorated through all Payment Activities.

Payment for Work Product means the partial compensation to be paid to Design-Build **Payment Request** means the request for payment on account of the Work all in accordance with the terms and conditions set forth in GDOT Standard Specification 109.03.

Performance and Measurement Table Baseline means the table setting forth Performance Requirements, time periods for response to Defects, inspection and measurement

methods, measurement records and Targets, as submitted by Design-Build Team annually for GDOT approval described in Table 19-1 of the Technical Provisions.

Performance Requirements means, for each Element of the Project during the Term, the requirements set forth in Table 19-1 of the Technical Provisions in the Column headed "Performance Requirement."

Permitted Design Exceptions means design exceptions identified in Section 11.2 Technical Provisions that are allowed to be implemented on the Project.

Person means any individual, corporation, joint venture, limited liability company, company, voluntary association, partnership, trust, unincorporated organization, Governmental Entity, or GDOT.

Phase 1 Hazardous Materials Investigation means an environmental assessment conducted in accordance with the DB Documents and ASTM E-1527-05, or any future revision or replacement thereof, to identify Recognized Environmental Conditions and potential Recognized Environmental Conditions.

Plans means (only where capitalized) contract drawings, working drawings, supplemental drawings, detail sheets or exact reproductions thereof, which show the location, character, dimensions and details of the Construction Work to be done.

Pre-existing Hazardous Materials means Hazardous Materials that meet all the following criteria:

(a) The Hazardous Materials are in, on or under the Right of Way as of the date SRTA or GDOT makes available to Design-Build Team the affected parcel; or

(b) The Hazardous Materials are not located in, on or under any Project Specific Locations or Additional Properties, except Additional Properties required due to GDOT Changes (including GDOT Changes regarding the initial construction).

For purposes of determining whether Hazardous Materials were in, on or under the Right of Way or any Additional Properties required by GDOT to be included in the Property as a result of GDOT Changes, as of the date on which GDOT makes available to Design-Build Team the affected parcel, Design-Build Team shall have the burden of proof to demonstrate it was not a Design-Build Team Release of Hazardous Materials:

(i) As to any Hazardous Materials not identified as being present as of such date in the following: The phase 1 investigations of the Project conducted by GDOT prior to the Effective Date or any Phase 1 Hazardous Materials Investigation or Phase 2 Hazardous Materials Investigation supplementing the foregoing report prepared as and when set forth in Article 7.8.2 of the Agreement; and

(ii) As to any Additional Properties required by GDOT to be included in the Property as a result of GDOT Changes, any Phase 1 Hazardous Materials Investigation thereof prepared and delivered as and when set forth in Article 7.8.2 of the Agreement.

For the purpose of this definition, "makes available" means:

(x) The Effective Date, except for parcels not yet acquired as of the Effective Date; and

(y) As to parcels not yet acquired as of the Effective Date and as to Additional Properties required by GDOT to be included in the Property as a result of GDOT Changes, the date Design-Build Team first receives the right to take and maintain possession of the parcel for all purposes for the remainder of the Term in accordance with the DB Documents, including commencement of construction, as the result of GDOT's having secured title or right of possession by contract or title instrument or by a special commissioners' award through the

Preliminary Baseline Schedule means the high level, logic based, critical path schedule representing Design-Build Team's plan to complete performance of the Work beginning on the date of NTP 1 to Final Acceptance of the Work, submitted with the Proposal, as set forth on Exhibit 10 to the Agreement. The Preliminary Baseline Schedule shall not mean the Project Status Schedule Updates as set forth in Section 2.3.4 of the Technical Provisions, nor shall such Project Status Schedule Updates constitute revisions or amendments to the Preliminary Baseline Schedule.

Preliminary Plans means the Design Documents which provide the preliminary design necessary for the related to construction, operations, and maintenance of the entire Project including any Utility Adjustments required by the Project.

Presidential Disaster Declaration means a declaration of a major disaster by the President of the United States triggering assistance from FEMA pursuant to the Disaster Relief Act of 1974 (Pub.L. No. 93-288, as amended).

Price Proposal means the price component of the Proposal evaluation as described ITP.

Price Proposal Score means the score calculated in accordance projects evaluation criteria.

Principal Project Documents means the Security Instruments and the Design-Build Contract.

Project means the Project as defined in the RFP, that is the subject of this Agreement, and which shall include the transportation facilities and all related structures, and improvements, including integration of the ITS, and communications systems used in connection with operation of such transportation facilities, to be designed and constructed pursuant to the terms of the DB Documents.

Project Baseline Schedule means the logic-based critical path schedule for all Work from commencement of the Work leading up to and including, without limitation, each Milestone Schedule Deadline, Substantial Completion and Final Acceptance, to be prepared by Design-Build Team consistent with and taking into account the Milestone Schedule, as and to the extent such schedule has been approved by GDOT, all as more particularly described in Section 2.3 of the Technical Provisions, and all revisions to such schedule as provided in the DB Documents. The Project Baseline Schedule shall not mean the Project Status Schedule Updates as set forth in Section 2.3.4 of the Technical Provisions, nor shall such Project Status Schedule Updates constitute revisions or amendments to the Project Baseline Schedule.

Project Extension means a linear addition to the original Project by Design-Build Team, including any at either terminus of the original Project and any linear improvement that interconnects with the original Project.

Project Information Coordinator means the person designated by Design-Build Team to manage Design-Build Team's public information activities as more particularly described in Section 3.2.2 of the Technical Provisions.

Project Management Plan means the document approved by GDOT, describing quality assurance and quality control activities necessary to manage the design and construction of the Project, containing the GDOT-approved component parts, plans and documentation described in Section 2 to the Technical Provisions.

Project Manager means the individual designated by Design-Build Team and approved in writing by GDOT in the position to take full responsibility for the prosecution of the Work and will act as a single point of contact on all matters on behalf of Design-Build Team as described in the approved Project Management Plan.

Project Phase shall have the meaning set forth in Section 2.1.4 of the Techncial Provisions.

Project Schedule shall mean the Preliminary Baseline Schedule or Project Baseline Schedule, as applicable, as controlled by the Milestone Schedule, pursuant to Article 3.3.4 of the Agreement, as may be further adjusted pursuant to any Supplemental Agreement, including on account of any Relief Events.

Project Specific Locations means any additional temporary property interests or rights, other than ROW or Additional Properties, which are not contiguous to the Property, that Design-Build Team may require for performance of the Work, including for temporary activities in connection with the Construction Work, such as construction work sites, temporary work areas, staging areas, storage areas, and earthwork material borrow sites.

Project Status Schedule Update means the logic-based critical path schedule submitted monthly containing progress status and enabling comparison to the Project Baseline Schedule.

Property has the meaning set forth in Article 2.2.1 of the Agreement and shall include only such property as identified in the NEPA Approval.

Proposal has the meaning set forth in Recital F of the Agreement.

Proposal Bond means the security that Proposers submit to GDOT with their Proposals

Proposal Revisions" has the meaning set forth in Section 5.4 of the ITP.

Proposal Due Date means the deadline for submission of the Proposal to GDOT as defined in the ITP Section 1.4.

Proposed Right of Way or **Proposed ROW** means any real property (which term is inclusive of all estates and interests in real property), improvements and fixtures within the lines established in and designated as "Proposed ROW" within Exhibit 4 to the Agreement for which

GDOT is obligated to provide access to Design-Build Team and/or acquire a leasehold estate or other similar property interest or rights pursuant to Article 2.2.1.1(b) of the Agreement. The term specifically includes all air space, surface rights and subsurface rights within the limits of the Proposed Right of Way and specifically excludes any Additional Properties. All portions of the Proposed Right of Way, as and to the extent of any property interests in same acquired by GDOT, shall thereafter and without further amendment to Exhibit 4 be deemed Existing Right of Way.

Proposer" or "**Proposers**" has the meaning set forth in Section 1.1 in the ITP.

Proprietary Intellectual Property means Intellectual Property created, used, applied or reduced to practice in connection with the Project or the Work that derives commercial value from its protection as a trade secret under applicable Law or from its protection under patent law.

Protection in Place means any action taken to avoid damaging a Utility which does not involve removing or relocating that Utility, including staking the location of a Utility, exposing the Utility, avoidance of a Utility's location by construction equipment, installing steel plating or concrete slabs, encasement in concrete, temporarily de-energizing power lines, and installing physical barriers. The term includes both temporary measures and permanent installations meeting the foregoing definition.

Provided Approvals means the Governmental Approvals for the Project obtained or to be obtained by GDOT, as specifically listed in Section 4.2 of the Technical Provisions (including any such approvals as may be required from GDOT independent of GDOT's Project administration pursuant to Article 6.2 of the Agreement).

Public Information and Communications Plan (PICP) has the meaning set forth in Section 3.2 of the Technical Provisions.

Punch List means an itemized list of Construction Work that remains to be completed following Substantial Completion but as a condition to Final Acceptance, provided that the nature of any such incomplete Work, and the correction and completion of same, will have no material or adverse effect on the normal and safe use and operation of the Project.

Punch List Period means the time provided for Design-Build Team's completion of Punch List Work, which shall be the time between Substantial Completion and Final Acceptance as provided in the Project Baseline Schedule.

QA/QC Proposal Revisions has the meaning set forth in Section 5.4 of the ITP.

QA/QC means quality assurance and quality control.

Quality Management Plan (QMP) means the set of GDOT-approved plans for quality management and control of the Project and Work, as set forth in Section 2.3.9 of the Technical Provisions.

Quality Manager means the individual retained by Design-Build Team as the Key Personnel with the authority and responsibility for ensuring establishment and maintenance of, and compliance with, the Quality Management Plan.

Quitclaim Deed means a quitclaim deed to be executed by a Utility Owner relinquishing its rights to maintain a Utility in a particular location, as more particularly described in Section 6.2.4.4 of the Technical Provisions.

Railroad Right of Entry Agreement has the meaning described in Section 14.3.1.3 of the Technical Provisions.

Recognized Environmental Condition has the meaning set forth in ASTM E-1527-00.

Record Drawings means construction drawings and related documentation revised to show as-built changes to the Project at Final Acceptance. Interim marked-in-the-field or red-lined drawings to be provided during the progress of the Work as required pursuant to the Technical Provisions shall not constitute the final Record Drawings.

Reference Information Documents (RIDs) means the collection of information, data, documents and other materials that GDOT has provided to Design-Build Team for general or reference information only.

Registered Professional Engineer means a person who is duly licensed and registered by the Georgia State Board of Registration for Professional Engineers and Land Surveyors to engage in the practice of engineering in the State of Georgia.

Registered Professional Land Surveyor means a person registered by the Georgia State Board of Registration for Professional Engineers and Land Surveyors to practice the profession of land, boundary, or property surveying or other similar professional practices.

Related Transportation Facility(ies) means all existing and future highways, streets and roads, including upgrades and expansions thereof, that is/are or will be adjacent to, connecting with or crossing under or over the Project, as specifically identified in the Technical Provisions.

Release of Hazardous Materials means any spill, leak, emission, release, discharge, injection, escape, leaching, dumping or disposal of Hazardous Materials into the soil, air, water, groundwater or environment, including any exacerbation of an existing release or condition of Hazardous Materials contamination.

Release for Construction or **RFC** means the written authorization by GDOT to proceed with any designated phase of the Construction Work based on the approved Released for Construction Documents.

Relief Event means any of the following events, subject to any limitations, claims submission requirements and other conditions set forth in the Agreement, provided that no relief will be available to the extent that (i) the events are within Design-Build Team's control, or are due to any wrongful act, wrongful omission, negligence, recklessness, willful misconduct, breach of contract or Law or violation of a Governmental Approval of any of the Design-Build Team-Related Entities; (ii) the events (or the effects of such events) could have been avoided by the exercise of reasonable caution, due diligence, or other reasonable efforts by Design-Build Team:

(a) Force Majeure Event;

(b) Latent defects in Existing Improvements;

(c) Change in Law;

(d) Discriminatory Action;

(e) GDOT's failure to perform or observe any of the covenants or obligations of GDOT under the Agreement or other DB Documents;

(f) GDOT Change;

(g) GDOT -Caused Delay;

(h) Performance of work in or directly adjacent to the Construction Maintenance Limits or Operations and Maintenance Limits, as well as any work by Separate Contractors within the ROW, carried out by or on behalf of GDOT or a Governmental Entity, excluding any Utility Adjustment Work by a Utility Owner, that directly disrupts Design-Build Team's onsite Work, or other documented delays to the Critical Path of the Work directly caused a Separate Contractor working on behalf of GDOT or a Governmental Entitiy;

(i) Discovery at, near or on the Existing Right of Way or Property of (a) any Pre-existing Hazardous Materials or Hazardous Materials not otherwise constituting a Design-Build Team Release of Hazardous Materials, provided that where such condition was identified in the existing Phase 1 Hazardous Materials Investigation included in the RIDs, Design-Build Team shall account for same in the Project Schedule and impacts shall be limited to such conditions not identified therein (whether in type or quantity), or (b) any archeological, paleontological or cultural resources not known to Design-Build Team prior to the Proposal Due Date;

(j) Discovery of (i) subsurface or latent physical conditions at the actual boring holes identified in the geotechnical reports included in the Reference Information Documents that differ materially from the subsurface conditions indicated in such geotechnical reports at such boring holes, excluding any such conditions known to Design-Build Team prior to the Proposal Due Date, or (ii) physical conditions within the Existing Right of Way or Property of an unusual nature, differing materially from those ordinarily encountered in the area and generally recognized as inherent in the type of work provided for in the Agreement, excluding any such conditions known to Design-Build Team prior to the Proposal Due Date or that would become known to Design-Build Team by undertaking reasonable investigation prior to the Proposal Due Date (for avoidance of doubt, conditions away from the actual boring holes that differ from conditions extrapolated from such boring data and that are not within clause (ii) above are not a Relief Event);

(k) Discovery at, near or on the Existing Right of Way or Property of any Threatened or Endangered Species (regardless of whether the species is listed as threatened or endangered as of the Proposal Due Date), excluding any such presence of species known to Design-Build Team prior to the Proposal Due Date or that would become known to Design-Build Team by undertaking reasonable investigation prior to the Proposal Due Date;

(l) Any spill of Hazardous Material by a third party who is not acting in the capacity of a Design-Build Team-Related Entity which (i) occurs after the Proposal Due Date, (ii) is required to be reported to a Governmental Entity and (iii) renders use of the roadway or

construction area unsafe or potentially unsafe absent assessment, containment and/or remediation;

(m) Issuance of a temporary restraining order or other form of injunction by a court that prohibits prosecution of any material portion of the Work;

(n) Suspension, termination or interruption of a NEPA Approval, except to the extent that such suspension, termination or interruption results from failure by any Design-Build Team-Related Entity to locate or design the Project or carry out the work in accordance with the NEPA Approval or other Governmental Approval (which failure may include (i) modification by or on behalf of Design-Build Team of the design concept included in the NEPA Approval, (ii) means or methods used by any Design-Build Team-Related Entity for carrying out the Work, or (iii) decision or action by or on behalf of Design-Build Team to use or acquire Additional Property);

(o) Any change in the design concept of the Project or any portion thereof resulting from judicial or administrative action taken with respect to a legal challenge to any NEPA Approval as compared to the design concept indicated in the alternative that was the subject of the NEPA Approval, except to the extent the change in design concept had already been incorporated into Design-Build Team's design schematics assumed in connection with the DB Contract Sum;

(p) Subject to clause (t) of this definition, failure to obtain, or unreasonable and unjustified delay in obtaining or otherwise maintaining once issued, a Governmental Approval from any Governmental Entity, except to the extent that such failure or delay results from failure by any Design-Build Team-Related Entity to locate or design the Project or carry out the work in accordance with the NEPA Approval or other Governmental Approval (which failure may include (i) modification by or on behalf of Design-Build Team of the design concept included in the NEPA Approval, (ii) means or methods used by any Design-Build Team-Related Entity for carrying out the Work, or (iii) decision or action by or on behalf of Design-Build Team to use or acquire Additional Property);

(q) GDOT's (i) lack of good and sufficient title to any parcel in the Existing Right of Way or the Property, to the extent it interferes with or adversely affects performance of Work, (ii) inability or failure to obtain an interest (including by easement or other right of access) to real property not identified in the Proposed Right of Way and required for construction of the Project as demonstrated by Design-Build Team, exclusive of any Additional Properties, Project Specific Locations, or parcels that are solely for the convenience of Design-Build Team, to the extent it interferes with or adversely affects performance of Work, or (iii) the existence at any time following issuance of NTP 3 of any title reservation, condition, easement or encumbrance on any parcel in the Existing Right of Way or Property owned by GDOT, of record or not of record, to the extent it interferes with or adversely affects performance of Work, except any title reservations, conditions, easements or encumbrances concerning Utilities or otherwise caused, permitted or suffered by a Design-Build Team-Related Entity;

(r) Unreasonable and unjustified delay by a Utility Owner with whom Design-Build Team has been unable to enter into a Utility Agreement in connection with a Utility Adjustment, or failure or delay of any Utility in obtaining any required easement, right of way or other property interest as may be required, provided that all of the "conditions to assistance" described in Article 7.5.7.2 of the Agreement have been satisfied;

(s) Failure to obtain, or unreasonable and unjustified delay in obtaining, an approval from GDOT with respect to a Permitted Design Exception, except to the extent that such failure or delay in obtaining the GDOT approval results from failure by any Design-Build Team-Related Entity to carry out the Work in accordance with the DB Documents;

(t) Failure to obtain, or unreasonable and unjustified delay in obtaining, a Governmental Approval required for a re-evaluation of a NEPA Approval due to an approved ATC; provided that Design-Build Team shall only be entitled to relief for such failure or delay after expiration of the applicable GDOT Re-evaluation Period; or

(u) Material delays as a result of any modification to the NEPA Approval as set forth pursuant to subpart (a) of the definition of NEPA Approval as provided in Exhibit 1 hereto, as a result of the ROD, and all approved supplements and re-evaluations pertaining to the Project as of the Effective Date as provided in subpart (b) of such definition, provided that any such modifications are not the result of an ATC, Additional Properties, or attributable to Design-Build Team's design.

Relief Event Determination has the meaning set forth in Article 13.1 of the Agreement.

Relief Event Notice means the written notice required to be provided by Design-Build Team under Article 13.1.1 of the Agreement.

Replacement Housing Calculation means the opportunity to provide the displaced person with the financial assistance to purchase or rent and occupy a comparable replacement dwelling without involuntarily incurring additional financial means due to the displacement.

Replacement Utility Property Interest means any permanent right, title or interest in real property outside of the Property (e.g., a fee or an easement) that is acquired for a Utility being reinstalled in a new location as a part of the Utility Adjustment Work. The term specifically excludes any statutory right of occupancy or permit granted by a Governmental Entity for occupancy of its real property by a Utility.

Request for Change Proposal means a written notice issued by GDOT to Design-Build Team setting forth a proposed GDOT Change and requesting Design-Build Team's assessment of cost, and schedule impacts thereof, as set forth in Article 14.1.2 of the Agreement.

Request for Information means a written request by the DB Team to GDOT requesting clarification of the DB Document requirements.

Request for Proposals (RFP) means all documents, whether attached or incorporated by reference, utilized for soliciting proposals. The RFP is the only solicitation utilized by the Department in the One Phase Low Bid selection method. The RFP is the second phase utilized by the Department for the Two Phase Low Bid and Best Value selection methods.

Request for Qualifications (RFQ) means all documents, whether attached or incorporated by reference, utilized by the Department for soliciting interested Proposers to apply for prequalification including instruction for submitting a Statement of Qualification (SOQ), evaluation criteria and minimum qualifications required of a Design-Build Team. The RFQ is the first phase of a two phase process utilized by the Department for the Two Phase Low Bid and Best Value selection methods.

Reserved means a section of the DB Documents (Design-Build Agreement, Technical Provisions, or Programmatic Provisions) that is not being utilized for this contract. Sections marked Reseved have no requirements and references to sections marked Reserved shall mean that there are no additional requirements beyond the reference point.

Right of Way or **ROW** means the Existing Right of Way and Proposed Right of Way.

Right of Way Acquisition Plan or **ROW Acquisition Plan** has the meaning set forth in Section 5 of Volume 3.

Rules have the meaning set forth in Recital C of the Agreement.

Safety Compliance means any and all improvements, repair, reconstruction, rehabilitation, restoration, renewal, replacement and changes in configuration or procedures respecting the Project to correct a specific safety condition or risk of the Project that GDOT has reasonably determined to exist by investigation or analysis and that is in violation of the requirements of the DB Documents.

Safety Compliance Order means a written order or directive from GDOT to Design-Build Team to implement Safety Compliance measures.

Safety Standards means those provisions of the Technical Provisions or Technical Documents that GDOT, FHWA, OSHA, or AASHTO considers to be important measures to protect public safety or worker safety. As a matter of clarification, provisions of Technical Provisions or Technical Documents primarily directed at durability of materials or equipment, where the durability is primarily a matter of life cycle cost rather than protecting public or worker safety, are not Safety Standards.

Schedule of Values means a detailed line item valuations for all Elements of the Work which lists all Payment Activities in a format that provides a sufficiently breakdown of the Pay Items. Include the Schedule of Values a rational basis for partial payments of the Lump Sum bid based on the completed portion of the item and definitive activities. Payment will not be made for individual construction activities. No payments will be made until the schedule of values is accepted. Mobilization, and Payment and Performance Bonds may be included as separate line items in the Schedule of Values. Any amount for Mobilization set forth in the Schedule of Values shall not exceed 2.5%. of the total construction cost.

Schematic Plan of Project means Design-Build Team's schematic plan specific to the preliminary roadway plans showing the concept and technical solutions in accordance with the provisions of the Instructions to Proposers, Exhibit C.3.4.1.

Security Document means any mortgage, deed of trust, pledge, lien, indenture, trust agreement, hypothecation, assignment, collateral assignment, financing statement under the Uniform Commercial Code of any jurisdiction, security instrument or other charge or encumbrance of any kind, including any lease in the nature of a security instrument, given to any Person as security for Design-Build Team Debt or Design-Build Team's obligations pertaining to Design-Build Team Debt and encumbering the Design-Build Team's Interest.

Selection Recommendation Committee means the group of individuals authorized by GDOT (if any) to recommend the Best Value Proposer to the Steering Committee.

Separate Contractor(s) means each and any separate contractor or vendor engaged by GDOT or any other governmental authority or agency of the State to perform, provide, and/or supply work, services, labor or materials for the Project that is expressly excluded from Design-Build Team's Work pursuant to the DB Documents.

Service Line means a Utility line, the function of which is to directly connect the improvements on an individual property to another Utility line located off such property, which other Utility line connects more than one such individual line to a larger system. However, unless otherwise noted in the Technical Provisions, the term "Service Line" excludes any line that supplies an active feed from a Utility Owner's facilities to supply, activate or energize GDOT's or a Governmental Entity's Highway Service System. Such line, including its actual connection to the Utility facility, shall instead be considered to be part of the applicable Highway Service System.

Site means the Property and any temporary rights or interests that Design-Build Team may acquire in connection with the Project or the Utility Adjustments included in the Construction Work, including Project Specific Locations.

Source Code and **Source Code Documentation** mean software written in programming languages, such as C++ and Fortran, including all comments and procedural code, such as job control language statements, in a form intelligible to trained programmers and capable of being translated into object or machine readable code for operation on computer equipment through assembly or compiling, and accompanied by documentation, including flow charts, schematics, statements of principles of operations, architectural standards, and commentary, explanations and instructions for compiling, describing the data flows, data structures, and control logic of the software in sufficient detail to enable a trained programmer through study of such documentation to maintain and/or modify the software without undue experimentation. Source Code and Source Code Documentation also include all modifications, additions, substitutions, updates, upgrades and corrections made to the foregoing items.

SRTA means the State Road and Tollway Authority.

Staged Design Subittals shall have the meaning set forth in Section 23.2.1 in the Techncial Provisions.

State means the State of Georgia.

State and Local Government Series (SLGS) Index means the State and Local Government Series (SLGS) Index published and maintained by the United States Department of the Treasury.

State Highway means a highway designated as part of the state highway system under Code 32-4-21.

Statement of Qualifications or **SOQ** has the meaning set forth in Section 1.1 of the ITP.

Stipulated Fee means the amount GDOT will pay unsuccessful responsive Proposers for their Work Product.

Subcontractor means any other Person, including any Supplier with whom any Contractor has further subcontracted, purchased or procured any part of the Work, at all tiers.

Submittal means any document, work product or other written or electronic end product or item required under the DB Documents to be delivered or submitted to GDOT, as applicable.

Substantial Completion means satisfaction of the criteria for completion of Construction Work as set forth in Article 7.7 of the Agreement, as and when confirmed by GDOT's issuance of a certificate in accordance with the procedures and within the time frame established in Article 7.7.1 of the Agreement.

Substantial Completion Date means the date upon which Design-Build Team has satisfied all conditions of and for Substantial Completion.

Substantial Completion Deadline means the deadline and required date for Substantial Completion of the Project as set forth in the Milestone Schedule, as such deadline may be extended for Relief Events from time to time pursuant to the Agreement, time being of the essence.

Substitute has the meaning set forth in the Direct Agreement.

Subsurface Utility Engineering (SUE) means an engineering process for accurately identifying the quality of subsurface utility information needed for highway plans, and for acquiring and managing that level of information during the development of a highway project, as more particularly described at the FHWA website http://www.fhwa.dot.gov/programadmin/sueindex.cfm.

Supplemental Agreement means a mutual agreement between GDOT and Design-Build Team for changes in the Work under Article 14 of the Agreement, including on account of any Relief Event Determination and/or Compensation Event Determination as set forth under Article 14.4 of the Agreement.

Supplier means any Person not performing work at or on the Site that supplies machinery, equipment, materials, hardware, software, systems or any other appurtenance to the Project to Design-Build Team or to any Contractor in connection with the performance of the Work. Persons who merely transport, pick up, deliver or carry materials, personnel, parts or equipment or any other similar items or persons to or from the Site shall not be deemed to be performing Work at the Site.

Surety means each properly licensed surety company, insurance company or other Person approved by GDOT, which has issued any of the P&P Bonds.

Taxes means federal, State, local or foreign income, margin, gross receipts, sales, use, excise, transfer, consumer, license, payroll, employment, severance, stamp, business, occupation, premium, windfall profits, environmental (including taxes under Section 59A of the Internal Revenue Code of 1986, as amended), customs, permit, capital stock, franchise, profits, withholding, social security (or similar), unemployment, disability, real property, personal property, registration, value added, alternative or add-on minimum, estimated or other taxes, levies, imposts, duties, fees or charges imposed, levied, collected, withheld or assessed at any time, whether direct or indirect, relating to, or incurred in connection with, the Project, the performance of the Work, or act, business, status or transaction of Design-Build Team,

including any interest, penalty or addition thereto, and including utility rates or rents, in all cases whether disputed or undisputed.

Technical Documents means all the standards, criteria, requirements, conditions, procedures, specifications and other provisions set forth in the manuals and documents identified in the DB Documents, as such provisions may (a) have been generally revised from time to time up the RFP advertisement date, or (b) be changed, added to or replaced pursuant to the Agreement.

Technical Provisions means Volume 2 and Volume 3; as such documents may (a) have been generally revised from time to time up to ninety (90) days prior to the Proposal Due Date, or (b) be changed, added to or replaced pursuant to the Agreement.

Technical Proposal means the technical component of the Proposal evaluation as described ITP.

Technology Enhancements means modifications, additions, refinements, substitutions, revisions, replacements and upgrades made to or in place of electronic toll collection and enforcement systems deployed on or for the Project or to any other computer systems or other technology used for the operation of the Project, or to any related documentation, that accomplish incidental, performance, structural, or functional improvements. The term specifically includes modifications, updates, revisions, replacements and upgrades made to or in place of software or any related documentation that correct errors or safety hazards or support new models of computer hardware with which the software is designed to operate. Technology Enhancements also include such new models of computer hardware.

Term has the meaning set forth in Article 3.1.1 of the Agreement.

Termination by Court Ruling has the meaning set forth in Article 19.11 of the Agreement.

Termination Compensation means each of the measure of compensation owing from GDOT to Design-Build Team upon termination of the Agreement prior to the stated expiration of the Term, pursuant to Article 19, and as set forth in Exhibit 20 to the Agreement.

Termination Date means (a) the date of expiration of the Term or (b) if applicable, the Early Termination Date.

Termination for Convenience has the meaning set forth in Article 19.1.1 of the Agreement.

Third Party Claims means, subject to Article 16.5.4 of the Agreement, any and all claims, disputes, disagreements, causes of action, demands, suits, actions, investigations, or legal or administrative proceedings asserted, initiated or brought by a Person that is not an Indemnified Party or Design-Build Team with respect to any Third Party Loss.

Third Party Loss means, subject to Article 16.5.4 of the Agreement, any actual or alleged Loss sustained or incurred by a Person that is not an Indemnified Party or Design-Build Team.

Threatened or Endangered Species means any species listed by the USFWS as threatened or endangered pursuant to the Endangered Species Act, as amended, 16 U.S.C. §§ 1531, *et seq*.

Tolling Integration Deadline means each certain Milestone Schedule Deadline, as set forth in the Milestone Schedule, as may be adjusted by the Project Baseline Schedule, for completion of such portions of the Work as necessary and required to allow the Tolling Integration Contractor to commence and complete the Tolling Integration Work.

Traffic Management Center is a center for the management and distribution of information to Users on a regional or statewide basis.

Transferee means any party as defined pursuant to Article 21.2.2.1 of the Agreement, solely for purposes of Articles 21.2 through 21.5 of the Agreement.

Transponder means the in-vehicle device that permits Users to communicate, identify, and conduct an electronic toll transaction with Design-Build Team's ETCS.

Transportation Management Plan means Design-Build Team's plan for transportation management throughout the Term, as more particularly described in Article 9.2.2 the Agreement and Section 18.2.1 of the Technical Provisions.

Travel Lane means the portion of roadway for the movement of vehiles, exclusive of shoulders.

Uniform Act means the Federal Uniform Relocation Assistance and Real Property Acquisition Policies Act, P.L. 91-646, as amended.

Uninsurable Risk means a risk, or any component of a risk, against which Design-Build Team or a Contractor is required to insure pursuant to the Agreement and for which, at any time after the Effective Date, either:

(a) the insurance coverage required under the Agreement is not available in relation to that risk from insurers that meet the qualifications set forth in Article 16.1.2.1 of the Agreement; or

(b) the terms and conditions for insuring that risk are such that the risk is not generally being insured against in the insurance market under commercially reasonable terms from insurers that meet the qualifications set forth in Article 16.1.2.1 of the Agreement.

Utility or **utility** means any of the following:

(a) a public, private, cooperative, municipal and/or government line, facility or system used for the carriage, transmission and/or distribution of cable television, electric power, telephone, telegraph, water, gas, oil, petroleum products, steam, chemicals, hydrocarbons, telecommunications, sewage, and similar commodities, that directly or indirectly serves the public;

(b) a line, facility or system which (i) carries or transmits a commodity referenced in clause (a) above but does not directly or indirectly serve the public, and (ii) is designated in

Volume 1 or Volume 2 to be treated, for purposes of the DB Documents only, in the same manner as a line, facility or system that qualifies as a Utility under clause (a) above; and

(c) a radio tower or transmission tower (including cellular) that directly or indirectly serve the public.

Notwithstanding the foregoing, the term "Utility" or "utility" excludes:

(a) all storm water lines, facilities, and systems that are part of the drainage system for the Property or connect to that system; and

(b) GDOT's or a Governmental Entity's Highway Service Systems.

The necessary appurtenances to each Utility facility shall be considered part of such Utility. Any Service Line connecting directly to a Utility shall be considered an appurtenance to that Utility, regardless of the ownership of such Service Line.

Utility Accommodation Manual (UAM) means the Utility Accommodation Manual issued by GDOT, at Ga. Comp. R. & Regs. r. 672-11-.01 through -.04, as the same may be amended, supplemented or replaced by GDOT from time to time.

Utility Adjustment Field Modification means any horizontal or vertical design change to a Utility Adjustment required by Design-Build Team or proposed by a Utility Owner due either to roadway design or to conditions not accurately reflected in the corresponding Utility Work Plan for which the review and comment/approval process has been completed, that alters the design included in the approved Utility Work Plan. An example would be shifting the alignment of an 8" water line to miss a roadway drainage structure. A minor change (e.g., an additional water valve, an added Utility marker at ROW line, a change in vertical bend, etc.) will not be considered a Utility Adjustment Field Modification, but shall be shown in the Record Drawings.

Utility Adjustment means each relocation (temporary or permanent), abandonment, Protection in Place, removal (of previously abandoned Utilities as well as of newly abandoned Utilities), replacement, reinstallation, and/or modification of existing Utilities necessary to accommodate construction, operation, maintenance and/or use of the Project; provided, however, that the term "Utility Adjustment" shall not refer to any of the work associated with facilities owned by any railroad. For any Utility crossing the Property, the Utility Adjustment Work for each crossing of the Property by that Utility shall be considered a separate Utility Adjustment. For any Utility installed longitudinally within the Property, the Utility Adjustment Work for each continuous segment of that Utility located within the Property shall be considered a separate Utility Adjustment.

Utility Adjustment Work means all efforts and costs necessary to accomplish the required Utility Adjustments, including all coordination, design, design review, permitting, construction, inspection, maintenance of records, relinquishment of Existing Utility Property Interests, preparation of Utility Joint Use Acknowledgements, and acquisition of Replacement Utility Property Interests, whether provided by Design-Build Team or by the Utility Owners. The term also includes any reimbursement of Utility Owners which is Design-Build Team's responsibility pursuant to Article 7.5 of the Agreement. Any Utility Adjustment Work furnished or performed by Design-Build Team is part of the Work; any Utility Adjustment Work furnished or performed by a Utility Owner is not part of the Work.

Utility Agreement means a MUAA and/or MUAAA, as the context may require.

Utility Enhancement means a Betterment or a Utility Owner Project, as referenced in Article 7.5.6 of the Agreement.

Utility Joint Use Acknowledgment or **Utility Joint Use Agreement** means an agreement between GDOT and a Utility Owner that establishes the rights and obligations of GDOT and the Utility Owner with respect to occupancy of the Property by such Utility Owner's Utility.

Utility Manager (UM) means the senior staff person designated by Design-Build Team to be responsible for coordination and oversight of Utility Adjustment operations during the planning, design, and construction phases of the Work, as more particularly described in Section 6.2.3 of the Technical Provisions.

Utility Owner means the owner or operator of any Utility (including both privately held and publicly held entities, cooperative utilities, and municipalities and other governmental agencies).

Utility Owner Project means the design and construction by or at the direction of a Utility Owner (or by Design-Build Team) of a new Utility other than (a) as part of a Utility Adjustment or (b) to provide service to the Project. Betterments are not Utility Owner Projects. Utility Owner Projects are entirely the financial obligation of the Utility Owner.

Utility Tracking Report means the report regarding Utilities likely to be impacted by the Project, which Design-Build Team shall maintain on a current basis, as more particularly described in Section 6.5.1 of the Technical Provisions.

Utility Work Plan means the collection of agreements, plans and other information and materials which Design-Build Team is required to submit to GDOT in connection with each Utility Adjustment (or group of Utility Adjustments subject to the same original Master Utility Adjustment Agreement), as more particularly described in Section 6.3.4.5 of the Technical Provisions. Depending on the context, the term also refers to Supplemental Utility Work Plans and Utility Work Plan Retention Requests (both also described in Section 6.3.4.5 of the Technical Provisions).

Utility Work Plan Checklist means a checklist listing the required components of a Utility Work Plan, as referenced in Section 6.3.4.5 of the Technical Provisions.

Utility Work Plan Retention Request means the collection of plans and other information and materials which Design-Build Team is required to submit to GDOT in connection with each Utility proposed to remain at its original location within the Existing Right of Way or Property, as more particularly described in Section 6.3.4.5 of the Technical Provisions; a single Utility Work Plan Retention Request may address more than one such Utility.

Volume 1 means the DB Agreement.

Volume 2 means the project-specific technical provisions entitled "Technical Provisions for DB Agreement - Volume 2".

Volume 3 means GDOT's technical provisions entitled "Programmatic Technical Provisions for DB Agreement - Volume 3".

Warning Notice means a written notice that GDOT delivers to Design-Build Team pursuant to Article 17.2 of the Agreement.

Work means all of the work required to be furnished and provided by Design-Build Team under the DB Documents for the Project, including without limitation, all administrative, design, engineering, construction, Utility Adjustment, utility accommodation, support services, ECTS and software integration, and coordination, except for those efforts which such DB Documents expressly specify will be performed by Persons other than Design-Build Team-Related Entities, all as required and as may reasonably inferred for full and proper completion of the Project in accordance with this Agreement and the DB Documents.

Work Breakdown Structure means a deliverable-oriented hierarchical structure that breaks the Work into elements that have distinct identification and that contain specific scope characteristics. Each descending WBS level represents an increasingly detailed delineation of elements of the total Project scope. The WBS will contain elements of Design Work and Construction Work. There shall be clearly identifiable linkage between the WBS, the elements of the Work, and Project Schedule. The WBS numbering convention shall be compatible with Project Baseline Schedule coding and may be compatible with document control coding.

Work Product means any design files, concepts, ideas, technology, techniques, methods, processes, drawings, reports, plans and specifications used in the development of the bid and technical proposal including any ATCs being acquired by the GDOT.

FHWA-1273 -- Revised May 1, 2012

REQUIRED CONTRACT PROVISIONS
FEDERAL-AID CONSTRUCTION CONTRACTS

I. General
II. Nondiscrimination
III. Nonsegregated Facilities
IV. Davis-Bacon and Related Act Provisions
V. Contract Work Hours and Safety Standards Act Provisions
VI. Subletting or Assigning the Contract
VII. Safety: Accident Prevention
VIII. False Statements Concerning Highway Projects
IX. Implementation of Clean Air Act and Federal Water Pollution Control Act
X. Compliance with Governmentwide Suspension and Debarment Requirements
XI. Certification Regarding Use of Contract Funds for Lobbying

ATTACHMENTS

A. Employment and Materials Preference for Appalachian Development Highway System or Appalachian Local Access Road Contracts (included in Appalachian contracts only)

I. GENERAL

1. Form FHWA-1273 must be physically incorporated in each construction contract funded under Title 23 (excluding emergency contracts solely intended for debris removal). The contractor (or subcontractor) must insert this form in each subcontract and further require its inclusion in all lower tier subcontracts (excluding purchase orders, rental agreements and other agreements for supplies or services).

The applicable requirements of Form FHWA-1273 are incorporated by reference for work done under any purchase order, rental agreement or agreement for other services. The prime contractor shall be responsible for compliance by any subcontractor, lower-tier subcontractor or service provider.

Form FHWA-1273 must be included in all Federal-aid design-build contracts, in all subcontracts and in lower tier subcontracts (excluding subcontracts for design services, purchase orders, rental agreements and other agreements for supplies or services). The design-builder shall be responsible for compliance by any subcontractor, lower-tier subcontractor or service provider.

Contracting agencies may reference Form FHWA-1273 in bid proposal or request for proposal documents, however, the Form FHWA-1273 must be physically incorporated (not referenced) in all contracts, subcontracts and lower-tier subcontracts (excluding purchase orders, rental agreements and other agreements for supplies or services related to a construction contract).

2. Subject to the applicability criteria noted in the following sections, these contract provisions shall apply to all work performed on the contract by the contractor's own organization and with the assistance of workers under the contractor's immediate superintendence and to all work performed on the contract by piecework, station work, or by subcontract.

3. A breach of any of the stipulations contained in these Required Contract Provisions may be sufficient grounds for withholding of progress payments, withholding of final payment, termination of the contract, suspension / debarment or any other action determined to be appropriate by the contracting agency and FHWA.

4. Selection of Labor: During the performance of this contract, the contractor shall not use convict labor for any purpose within the limits of a construction project on a Federal-aid highway unless it is labor performed by convicts who are on parole, supervised release, or probation. The term Federal-aid highway does not include roadways functionally classified as local roads or rural minor collectors.

II. NONDISCRIMINATION

The provisions of this section related to 23 CFR Part 230 are applicable to all Federal-aid construction contracts and to all related construction subcontracts of $10,000 or more. The provisions of 23 CFR Part 230 are not applicable to material supply, engineering, or architectural service contracts.

In addition, the contractor and all subcontractors must comply with the following policies: Executive Order 11246, 41 CFR 60, 29 CFR 1625-1627, Title 23 USC Section 140, the Rehabilitation Act of 1973, as amended (29 USC 794), Title VI of the Civil Rights Act of 1964, as amended, and related regulations including 49 CFR Parts 21, 26 and 27; and 23 CFR Parts 200, 230, and 633.

The contractor and all subcontractors must comply with: the requirements of the Equal Opportunity Clause in 41 CFR 60-1.4(b) and, for all construction contracts exceeding $10,000, the Standard Federal Equal Employment Opportunity Construction Contract Specifications in 41 CFR 60-4.3.

Note: The U.S. Department of Labor has exclusive authority to determine compliance with Executive Order 11246 and the policies of the Secretary of Labor including 41 CFR 60, and 29 CFR 1625-1627. The contracting agency and the FHWA have the authority and the responsibility to ensure compliance with Title 23 USC Section 140, the Rehabilitation Act of 1973, as amended (29 USC 794), and Title VI of the Civil Rights Act of 1964, as amended, and related regulations including 49 CFR Parts 21, 26 and 27; and 23 CFR Parts 200, 230, and 633.

The following provision is adopted from 23 CFR 230, Appendix A, with appropriate revisions to conform to the U.S. Department of Labor (US DOL) and FHWA requirements.

1. Equal Employment Opportunity: Equal employment opportunity (EEO) requirements not to discriminate and to take affirmative action to assure equal opportunity as set forth under laws, executive orders, rules, regulations (28 CFR 35, 29 CFR 1630, 29 CFR 1625-1627, 41 CFR 60 and 49 CFR 27) and orders of the Secretary of Labor as modified by the provisions prescribed herein, and imposed pursuant to 23 U.S.C. 140 shall constitute the EEO and specific affirmative action standards for the contractor's project activities under

this contract. The provisions of the Americans with Disabilities Act of 1990 (42 U.S.C. 12101 et seq.) set forth under 28 CFR 35 and 29 CFR 1630 are incorporated by reference in this contract. In the execution of this contract, the contractor agrees to comply with the following minimum specific requirement activities of EEO:

a. The contractor will work with the contracting agency and the Federal Government to ensure that it has made every good faith effort to provide equal opportunity with respect to all of its terms and conditions of employment and in their review of activities under the contract.

b. The contractor will accept as its operating policy the following statement:

"It is the policy of this Company to assure that applicants are employed, and that employees are treated during employment, without regard to their race, religion, sex, color, national origin, age or disability. Such action shall include: employment, upgrading, demotion, or transfer; recruitment or recruitment advertising; layoff or termination; rates of pay or other forms of compensation; and selection for training, including apprenticeship, pre-apprenticeship, and/or on-the-job training."

2. EEO Officer: The contractor will designate and make known to the contracting officers an EEO Officer who will have the responsibility for and must be capable of effectively administering and promoting an active EEO program and who must be assigned adequate authority and responsibility to do so.

3. Dissemination of Policy: All members of the contractor's staff who are authorized to hire, supervise, promote, and discharge employees, or who recommend such action, or who are substantially involved in such action, will be made fully cognizant of, and will implement, the contractor's EEO policy and contractual responsibilities to provide EEO in each grade and classification of employment. To ensure that the above agreement will be met, the following actions will be taken as a minimum:

a. Periodic meetings of supervisory and personnel office employees will be conducted before the start of work and then not less often than once every six months, at which time the contractor's EEO policy and its implementation will be reviewed and explained. The meetings will be conducted by the EEO Officer.

b. All new supervisory or personnel office employees will be given a thorough indoctrination by the EEO Officer, covering all major aspects of the contractor's EEO obligations within thirty days following their reporting for duty with the contractor.

c. All personnel who are engaged in direct recruitment for the project will be instructed by the EEO Officer in the contractor's procedures for locating and hiring minorities and women.

d. Notices and posters setting forth the contractor's EEO policy will be placed in areas readily accessible to employees, applicants for employment and potential employees.

e. The contractor's EEO policy and the procedures to implement such policy will be brought to the attention of employees by means of meetings, employee handbooks, or other appropriate means.

4. Recruitment: When advertising for employees, the contractor will include in all advertisements for employees the notation: "An Equal Opportunity Employer." All such advertisements will be placed in publications having a large circulation among minorities and women in the area from which the project work force would normally be derived.

a. The contractor will, unless precluded by a valid bargaining agreement, conduct systematic and direct recruitment through public and private employee referral sources likely to yield qualified minorities and women. To meet this requirement, the contractor will identify sources of potential minority group employees, and establish with such identified sources procedures whereby minority and women applicants may be referred to the contractor for employment consideration.

b. In the event the contractor has a valid bargaining agreement providing for exclusive hiring hall referrals, the contractor is expected to observe the provisions of that agreement to the extent that the system meets the contractor's compliance with EEO contract provisions. Where implementation of such an agreement has the effect of discriminating against minorities or women, or obligates the contractor to do the same, such implementation violates Federal nondiscrimination provisions.

c. The contractor will encourage its present employees to refer minorities and women as applicants for employment. Information and procedures with regard to referring such applicants will be discussed with employees.

5. Personnel Actions: Wages, working conditions, and employee benefits shall be established and administered, and personnel actions of every type, including hiring, upgrading, promotion, transfer, demotion, layoff, and termination, shall be taken without regard to race, color, religion, sex, national origin, age or disability. The following procedures shall be followed:

a. The contractor will conduct periodic inspections of project sites to insure that working conditions and employee facilities do not indicate discriminatory treatment of project site personnel.

b. The contractor will periodically evaluate the spread of wages paid within each classification to determine any evidence of discriminatory wage practices.

c. The contractor will periodically review selected personnel actions in depth to determine whether there is evidence of discrimination. Where evidence is found, the contractor will promptly take corrective action. If the review indicates that the discrimination may extend beyond the actions reviewed, such corrective action shall include all affected persons.

d. The contractor will promptly investigate all complaints of alleged discrimination made to the contractor in connection with its obligations under this contract, will attempt to resolve such complaints, and will take appropriate corrective action within a reasonable time. If the investigation indicates that the discrimination may affect persons other than the complainant, such corrective action shall include such other persons. Upon completion of each investigation, the contractor will inform every complainant of all of their avenues of appeal.

6. Training and Promotion:

a. The contractor will assist in locating, qualifying, and increasing the skills of minorities and women who are

applicants for employment or current employees. Such efforts should be aimed at developing full journey level status employees in the type of trade or job classification involved.

b. Consistent with the contractor's work force requirements and as permissible under Federal and State regulations, the contractor shall make full use of training programs, i.e., apprenticeship, and on-the-job training programs for the geographical area of contract performance. In the event a special provision for training is provided under this contract, this subparagraph will be superseded as indicated in the special provision. The contracting agency may reserve training positions for persons who receive welfare assistance in accordance with 23 U.S.C. 140(a).

c. The contractor will advise employees and applicants for employment of available training programs and entrance requirements for each.

d. The contractor will periodically review the training and promotion potential of employees who are minorities and women and will encourage eligible employees to apply for such training and promotion.

7. Unions: If the contractor relies in whole or in part upon unions as a source of employees, the contractor will use good faith efforts to obtain the cooperation of such unions to increase opportunities for minorities and women. Actions by the contractor, either directly or through a contractor's association acting as agent, will include the procedures set forth below:

a. The contractor will use good faith efforts to develop, in cooperation with the unions, joint training programs aimed toward qualifying more minorities and women for membership in the unions and increasing the skills of minorities and women so that they may qualify for higher paying employment.

b. The contractor will use good faith efforts to incorporate an EEO clause into each union agreement to the end that such union will be contractually bound to refer applicants without regard to their race, color, religion, sex, national origin, age or disability.

c. The contractor is to obtain information as to the referral practices and policies of the labor union except that to the extent such information is within the exclusive possession of the labor union and such labor union refuses to furnish such information to the contractor, the contractor shall so certify to the contracting agency and shall set forth what efforts have been made to obtain such information.

d. In the event the union is unable to provide the contractor with a reasonable flow of referrals within the time limit set forth in the collective bargaining agreement, the contractor will, through independent recruitment efforts, fill the employment vacancies without regard to race, color, religion, sex, national origin, age or disability; making full efforts to obtain qualified and/or qualifiable minorities and women. The failure of a union to provide sufficient referrals (even though it is obligated to provide exclusive referrals under the terms of a collective bargaining agreement) does not relieve the contractor from the requirements of this paragraph. In the event the union referral practice prevents the contractor from meeting the obligations pursuant to Executive Order 11246, as amended, and these special provisions, such contractor shall immediately notify the contracting agency.

8. Reasonable Accommodation for Applicants / Employees with Disabilities: The contractor must be familiar with the requirements for and comply with the Americans with Disabilities Act and all rules and regulations established there under. Employers must provide reasonable accommodation in all employment activities unless to do so would cause an undue hardship.

9. Selection of Subcontractors, Procurement of Materials and Leasing of Equipment: The contractor shall not discriminate on the grounds of race, color, religion, sex, national origin, age or disability in the selection and retention of subcontractors, including procurement of materials and leases of equipment. The contractor shall take all necessary and reasonable steps to ensure nondiscrimination in the administration of this contract.

a. The contractor shall notify all potential subcontractors and suppliers and lessors of their EEO obligations under this contract.

b. The contractor will use good faith efforts to ensure subcontractor compliance with their EEO obligations.

10. Assurance Required by 49 CFR 26.13(b):

a. The requirements of 49 CFR Part 26 and the State DOT's U.S. DOT-approved DBE program are incorporated by reference.

b. The contractor or subcontractor shall not discriminate on the basis of race, color, national origin, or sex in the performance of this contract. The contractor shall carry out applicable requirements of 49 CFR Part 26 in the award and administration of DOT-assisted contracts. Failure by the contractor to carry out these requirements is a material breach of this contract, which may result in the termination of this contract or such other remedy as the contracting agency deems appropriate.

11. Records and Reports: The contractor shall keep such records as necessary to document compliance with the EEO requirements. Such records shall be retained for a period of three years following the date of the final payment to the contractor for all contract work and shall be available at reasonable times and places for inspection by authorized representatives of the contracting agency and the FHWA.

a. The records kept by the contractor shall document the following:

(1) The number and work hours of minority and non-minority group members and women employed in each work classification on the project;

(2) The progress and efforts being made in cooperation with unions, when applicable, to increase employment opportunities for minorities and women; and

(3) The progress and efforts being made in locating, hiring, training, qualifying, and upgrading minorities and women;

b. The contractors and subcontractors will submit an annual report to the contracting agency each July for the duration of the project, indicating the number of minority, women, and non-minority group employees currently engaged in each work classification required by the contract work. This information is to be reported on Form FHWA-1391. The staffing data should represent the project work force on board in all or any part of the last payroll period preceding the end of July. If on-the-job training is being required by special provision, the contractor

will be required to collect and report training data. The employment data should reflect the work force on board during all or any part of the last payroll period preceding the end of July.

III. NONSEGREGATED FACILITIES

This provision is applicable to all Federal-aid construction contracts and to all related construction subcontracts of $10,000 or more.

The contractor must ensure that facilities provided for employees are provided in such a manner that segregation on the basis of race, color, religion, sex, or national origin cannot result. The contractor may neither require such segregated use by written or oral policies nor tolerate such use by employee custom. The contractor's obligation extends further to ensure that its employees are not assigned to perform their services at any location, under the contractor's control, where the facilities are segregated. The term "facilities" includes waiting rooms, work areas, restaurants and other eating areas, time clocks, restrooms, washrooms, locker rooms, and other storage or dressing areas, parking lots, drinking fountains, recreation or entertainment areas, transportation, and housing provided for employees. The contractor shall provide separate or single-user restrooms and necessary dressing or sleeping areas to assure privacy between sexes.

IV. DAVIS-BACON AND RELATED ACT PROVISIONS

This section is applicable to all Federal-aid construction projects exceeding $2,000 and to all related subcontracts and lower-tier subcontracts (regardless of subcontract size). The requirements apply to all projects located within the right-of-way of a roadway that is functionally classified as Federal-aid highway. This excludes roadways functionally classified as local roads or rural minor collectors, which are exempt. Contracting agencies may elect to apply these requirements to other projects.

The following provisions are from the U.S. Department of Labor regulations in 29 CFR 5.5 “Contract provisions and related matters” with minor revisions to conform to the FHWA-1273 format and FHWA program requirements.

1. Minimum wages

a. All laborers and mechanics employed or working upon the site of the work, will be paid unconditionally and not less often than once a week, and without subsequent deduction or rebate on any account (except such payroll deductions as are permitted by regulations issued by the Secretary of Labor under the Copeland Act (29 CFR part 3)), the full amount of wages and bona fide fringe benefits (or cash equivalents thereof) due at time of payment computed at rates not less than those contained in the wage determination of the Secretary of Labor which is attached hereto and made a part hereof, regardless of any contractual relationship which may be alleged to exist between the contractor and such laborers and mechanics.

Contributions made or costs reasonably anticipated for bona fide fringe benefits under section 1(b)(2) of the Davis-Bacon Act on behalf of laborers or mechanics are considered wages paid to such laborers or mechanics, subject to the provisions of paragraph 1.d. of this section; also, regular contributions made or costs incurred for more than a weekly period (but not less often than quarterly) under plans, funds, or programs which cover the particular weekly period, are deemed to be constructively made or incurred during such weekly period. Such laborers and mechanics shall be paid the appropriate wage rate and fringe benefits on the wage determination for the classification of work actually performed, without regard to skill, except as provided in 29 CFR 5.5(a)(4). Laborers or mechanics performing work in more than one classification may be compensated at the rate specified for each classification for the time actually worked therein: Provided, That the employer's payroll records accurately set forth the time spent in each classification in which work is performed. The wage determination (including any additional classification and wage rates conformed under paragraph 1.b. of this section) and the Davis-Bacon poster (WH–1321) shall be posted at all times by the contractor and its subcontractors at the site of the work in a prominent and accessible place where it can be easily seen by the workers.

b.(1) The contracting officer shall require that any class of laborers or mechanics, including helpers, which is not listed in the wage determination and which is to be employed under the contract shall be classified in conformance with the wage determination. The contracting officer shall approve an additional classification and wage rate and fringe benefits therefore only when the following criteria have been met:

(i) The work to be performed by the classification requested is not performed by a classification in the wage determination; and

(ii) The classification is utilized in the area by the construction industry; and

(iii) The proposed wage rate, including any bona fide fringe benefits, bears a reasonable relationship to the wage rates contained in the wage determination.

(2) If the contractor and the laborers and mechanics to be employed in the classification (if known), or their representatives, and the contracting officer agree on the classification and wage rate (including the amount designated for fringe benefits where appropriate), a report of the action taken shall be sent by the contracting officer to the Administrator of the Wage and Hour Division, Employment Standards Administration, U.S. Department of Labor, Washington, DC 20210. The Administrator, or an authorized representative, will approve, modify, or disapprove every additional classification action within 30 days of receipt and so advise the contracting officer or will notify the contracting officer within the 30-day period that additional time is necessary.

(3) In the event the contractor, the laborers or mechanics to be employed in the classification or their representatives, and the contracting officer do not agree on the proposed classification and wage rate (including the amount designated for fringe benefits, where appropriate), the contracting officer shall refer the questions, including the views of all interested parties and the recommendation of the contracting officer, to the Wage and Hour Administrator for determination. The Wage and Hour Administrator, or an authorized representative, will issue a determination within 30 days of receipt and so advise the contracting officer or

will notify the contracting officer within the 30-day period that additional time is necessary.

(4) The wage rate (including fringe benefits where appropriate) determined pursuant to paragraphs 1.b.(2) or 1.b.(3) of this section, shall be paid to all workers performing work in the classification under this contract from the first day on which work is performed in the classification.

c. Whenever the minimum wage rate prescribed in the contract for a class of laborers or mechanics includes a fringe benefit which is not expressed as an hourly rate, the contractor shall either pay the benefit as stated in the wage determination or shall pay another bona fide fringe benefit or an hourly cash equivalent thereof.

d. If the contractor does not make payments to a trustee or other third person, the contractor may consider as part of the wages of any laborer or mechanic the amount of any costs reasonably anticipated in providing bona fide fringe benefits under a plan or program, Provided, That the Secretary of Labor has found, upon the written request of the contractor, that the applicable standards of the Davis-Bacon Act have been met. The Secretary of Labor may require the contractor to set aside in a separate account assets for the meeting of obligations under the plan or program.

2. Withholding

The contracting agency shall upon its own action or upon written request of an authorized representative of the Department of Labor, withhold or cause to be withheld from the contractor under this contract, or any other Federal contract with the same prime contractor, or any other federally-assisted contract subject to Davis-Bacon prevailing wage requirements, which is held by the same prime contractor, so much of the accrued payments or advances as may be considered necessary to pay laborers and mechanics, including apprentices, trainees, and helpers, employed by the contractor or any subcontractor the full amount of wages required by the contract. In the event of failure to pay any laborer or mechanic, including any apprentice, trainee, or helper, employed or working on the site of the work, all or part of the wages required by the contract, the contracting agency may, after written notice to the contractor, take such action as may be necessary to cause the suspension of any further payment, advance, or guarantee of funds until such violations have ceased.

3. Payrolls and basic records

a. Payrolls and basic records relating thereto shall be maintained by the contractor during the course of the work and preserved for a period of three years thereafter for all laborers and mechanics working at the site of the work. Such records shall contain the name, address, and social security number of each such worker, his or her correct classification, hourly rates of wages paid (including rates of contributions or costs anticipated for bona fide fringe benefits or cash equivalents thereof of the types described in section 1(b)(2)(B) of the Davis-Bacon Act), daily and weekly number of hours worked, deductions made and actual wages paid. Whenever the Secretary of Labor has found under 29 CFR 5.5(a)(1)(iv) that the wages of any laborer or mechanic include the amount of any costs reasonably anticipated in providing benefits under a plan or program described in section 1(b)(2)(B) of the Davis-Bacon Act, the contractor shall maintain records which show that the commitment to provide such benefits is enforceable, that the plan or program is financially responsible, and that the plan or program has been communicated in writing to the laborers or mechanics affected, and records which show the costs anticipated or the actual cost incurred in providing such benefits. Contractors employing apprentices or trainees under approved programs shall maintain written evidence of the registration of apprenticeship programs and certification of trainee programs, the registration of the apprentices and trainees, and the ratios and wage rates prescribed in the applicable programs.

b.(1) The contractor shall submit weekly for each week in which any contract work is performed a copy of all payrolls to the contracting agency. The payrolls submitted shall set out accurately and completely all of the information required to be maintained under 29 CFR 5.5(a)(3)(i), except that full social security numbers and home addresses shall not be included on weekly transmittals. Instead the payrolls shall only need to include an individually identifying number for each employee (e.g. , the last four digits of the employee's social security number). The required weekly payroll information may be submitted in any form desired. Optional Form WH–347 is available for this purpose from the Wage and Hour Division Web site at http://www.dol.gov/esa/whd/forms/wh347instr.htm or its successor site. The prime contractor is responsible for the submission of copies of payrolls by all subcontractors. Contractors and subcontractors shall maintain the full social security number and current address of each covered worker, and shall provide them upon request to the contracting agency for transmission to the State DOT, the FHWA or the Wage and Hour Division of the Department of Labor for purposes of an investigation or audit of compliance with prevailing wage requirements. It is not a violation of this section for a prime contractor to require a subcontractor to provide addresses and social security numbers to the prime contractor for its own records, without weekly submission to the contracting agency..

(2) Each payroll submitted shall be accompanied by a "Statement of Compliance," signed by the contractor or subcontractor or his or her agent who pays or supervises the payment of the persons employed under the contract and shall certify the following:

(i) That the payroll for the payroll period contains the information required to be provided under §5.5 (a)(3)(ii) of Regulations, 29 CFR part 5, the appropriate information is being maintained under §5.5 (a)(3)(i) of Regulations, 29 CFR part 5, and that such information is correct and complete;

(ii) That each laborer or mechanic (including each helper, apprentice, and trainee) employed on the contract during the payroll period has been paid the full weekly wages earned, without rebate, either directly or indirectly, and that no deductions have been made either directly or indirectly from the full wages earned, other than permissible deductions as set forth in Regulations, 29 CFR part 3;

(iii) That each laborer or mechanic has been paid not less than the applicable wage rates and fringe benefits or cash equivalents for the classification of work performed, as specified in the applicable wage determination incorporated into the contract.

(3) The weekly submission of a properly executed certification set forth on the reverse side of Optional Form WH–347 shall satisfy the requirement for submission of the "Statement of Compliance" required by paragraph 3.b.(2) of this section.

(4) The falsification of any of the above certifications may subject the contractor or subcontractor to civil or criminal prosecution under section 1001 of title 18 and section 231 of title 31 of the United States Code.

c. The contractor or subcontractor shall make the records required under paragraph 3.a. of this section available for inspection, copying, or transcription by authorized representatives of the contracting agency, the State DOT, the FHWA, or the Department of Labor, and shall permit such representatives to interview employees during working hours on the job. If the contractor or subcontractor fails to submit the required records or to make them available, the FHWA may, after written notice to the contractor, the contracting agency or the State DOT, take such action as may be necessary to cause the suspension of any further payment, advance, or guarantee of funds. Furthermore, failure to submit the required records upon request or to make such records available may be grounds for debarment action pursuant to 29 CFR 5.12.

4. Apprentices and trainees

a. Apprentices (programs of the USDOL).

Apprentices will be permitted to work at less than the predetermined rate for the work they performed when they are employed pursuant to and individually registered in a bona fide apprenticeship program registered with the U.S. Department of Labor, Employment and Training Administration, Office of Apprenticeship Training, Employer and Labor Services, or with a State Apprenticeship Agency recognized by the Office, or if a person is employed in his or her first 90 days of probationary employment as an apprentice in such an apprenticeship program, who is not individually registered in the program, but who has been certified by the Office of Apprenticeship Training, Employer and Labor Services or a State Apprenticeship Agency (where appropriate) to be eligible for probationary employment as an apprentice.

The allowable ratio of apprentices to journeymen on the job site in any craft classification shall not be greater than the ratio permitted to the contractor as to the entire work force under the registered program. Any worker listed on a payroll at an apprentice wage rate, who is not registered or otherwise employed as stated above, shall be paid not less than the applicable wage rate on the wage determination for the classification of work actually performed. In addition, any apprentice performing work on the job site in excess of the ratio permitted under the registered program shall be paid not less than the applicable wage rate on the wage determination for the work actually performed. Where a contractor is performing construction on a project in a locality other than that in which its program is registered, the ratios and wage rates (expressed in percentages of the journeyman's hourly rate) specified in the contractor's or subcontractor's registered program shall be observed.

Every apprentice must be paid at not less than the rate specified in the registered program for the apprentice's level of progress, expressed as a percentage of the journeymen hourly rate specified in the applicable wage determination. Apprentices shall be paid fringe benefits in accordance with the provisions of the apprenticeship program. If the apprenticeship program does not specify fringe benefits, apprentices must be paid the full amount of fringe benefits listed on the wage determination for the applicable classification. If the Administrator determines that a different practice prevails for the applicable apprentice classification, fringes shall be paid in accordance with that determination.

In the event the Office of Apprenticeship Training, Employer and Labor Services, or a State Apprenticeship Agency recognized by the Office, withdraws approval of an apprenticeship program, the contractor will no longer be permitted to utilize apprentices at less than the applicable predetermined rate for the work performed until an acceptable program is approved.

b. Trainees (programs of the USDOL).

Except as provided in 29 CFR 5.16, trainees will not be permitted to work at less than the predetermined rate for the work performed unless they are employed pursuant to and individually registered in a program which has received prior approval, evidenced by formal certification by the U.S. Department of Labor, Employment and Training Administration.

The ratio of trainees to journeymen on the job site shall not be greater than permitted under the plan approved by the Employment and Training Administration.

Every trainee must be paid at not less than the rate specified in the approved program for the trainee's level of progress, expressed as a percentage of the journeyman hourly rate specified in the applicable wage determination. Trainees shall be paid fringe benefits in accordance with the provisions of the trainee program. If the trainee program does not mention fringe benefits, trainees shall be paid the full amount of fringe benefits listed on the wage determination unless the Administrator of the Wage and Hour Division determines that there is an apprenticeship program associated with the corresponding journeyman wage rate on the wage determination which provides for less than full fringe benefits for apprentices. Any employee listed on the payroll at a trainee rate who is not registered and participating in a training plan approved by the Employment and Training Administration shall be paid not less than the applicable wage rate on the wage determination for the classification of work actually performed. In addition, any trainee performing work on the job site in excess of the ratio permitted under the registered program shall be paid not less than the applicable wage rate on the wage determination for the work actually performed.

In the event the Employment and Training Administration withdraws approval of a training program, the contractor will no longer be permitted to utilize trainees at less than the applicable predetermined rate for the work performed until an acceptable program is approved.

c. Equal employment opportunity. The utilization of apprentices, trainees and journeymen under this part shall be in conformity with the equal employment opportunity requirements of Executive Order 11246, as amended, and 29 CFR part 30.

d. Apprentices and Trainees (programs of the U.S. DOT).

Apprentices and trainees working under apprenticeship and skill training programs which have been certified by the Secretary of Transportation as promoting EEO in connection with Federal-aid highway construction programs are not subject to the requirements of paragraph 4 of this Section IV. The straight time hourly wage rates for apprentices and trainees under such programs will be established by the particular programs. The ratio of apprentices and trainees to journeymen shall not be greater than permitted by the terms of the particular program.

5. Compliance with Copeland Act requirements. The contractor shall comply with the requirements of 29 CFR part 3, which are incorporated by reference in this contract.

6. Subcontracts. The contractor or subcontractor shall insert Form FHWA-1273 in any subcontracts and also require the subcontractors to include Form FHWA-1273 in any lower tier subcontracts. The prime contractor shall be responsible for the compliance by any subcontractor or lower tier subcontractor with all the contract clauses in 29 CFR 5.5.

7. Contract termination: debarment. A breach of the contract clauses in 29 CFR 5.5 may be grounds for termination of the contract, and for debarment as a contractor and a subcontractor as provided in 29 CFR 5.12.

8. Compliance with Davis-Bacon and Related Act requirements. All rulings and interpretations of the Davis-Bacon and Related Acts contained in 29 CFR parts 1, 3, and 5 are herein incorporated by reference in this contract.

9. Disputes concerning labor standards. Disputes arising out of the labor standards provisions of this contract shall not be subject to the general disputes clause of this contract. Such disputes shall be resolved in accordance with the procedures of the Department of Labor set forth in 29 CFR parts 5, 6, and 7. Disputes within the meaning of this clause include disputes between the contractor (or any of its subcontractors) and the contracting agency, the U.S. Department of Labor, or the employees or their representatives.

10. Certification of eligibility.

a. By entering into this contract, the contractor certifies that neither it (nor he or she) nor any person or firm who has an interest in the contractor's firm is a person or firm ineligible to be awarded Government contracts by virtue of section 3(a) of the Davis-Bacon Act or 29 CFR 5.12(a)(1).

b. No part of this contract shall be subcontracted to any person or firm ineligible for award of a Government contract by virtue of section 3(a) of the Davis-Bacon Act or 29 CFR 5.12(a)(1).

c. The penalty for making false statements is prescribed in the U.S. Criminal Code, 18 U.S.C. 1001.

V. CONTRACT WORK HOURS AND SAFETY STANDARDS ACT

The following clauses apply to any Federal-aid construction contract in an amount in excess of $100,000 and subject to the overtime provisions of the Contract Work Hours and Safety Standards Act. These clauses shall be inserted in addition to the clauses required by 29 CFR 5.5(a) or 29 CFR 4.6. As used in this paragraph, the terms laborers and mechanics include watchmen and guards.

1. Overtime requirements. No contractor or subcontractor contracting for any part of the contract work which may require or involve the employment of laborers or mechanics shall require or permit any such laborer or mechanic in any workweek in which he or she is employed on such work to work in excess of forty hours in such workweek unless such laborer or mechanic receives compensation at a rate not less than one and one-half times the basic rate of pay for all hours worked in excess of forty hours in such workweek.

2. Violation; liability for unpaid wages; liquidated damages. In the event of any violation of the clause set forth in paragraph (1.) of this section, the contractor and any subcontractor responsible therefor shall be liable for the unpaid wages. In addition, such contractor and subcontractor shall be liable to the United States (in the case of work done under contract for the District of Columbia or a territory, to such District or to such territory), for liquidated damages. Such liquidated damages shall be computed with respect to each individual laborer or mechanic, including watchmen and guards, employed in violation of the clause set forth in paragraph (1.) of this section, in the sum of $10 for each calendar day on which such individual was required or permitted to work in excess of the standard workweek of forty hours without payment of the overtime wages required by the clause set forth in paragraph (1.) of this section.

3. Withholding for unpaid wages and liquidated damages. The FHWA or the contacting agency shall upon its own action or upon written request of an authorized representative of the Department of Labor withhold or cause to be withheld, from any moneys payable on account of work performed by the contractor or subcontractor under any such contract or any other Federal contract with the same prime contractor, or any other federally-assisted contract subject to the Contract Work Hours and Safety Standards Act, which is held by the same prime contractor, such sums as may be determined to be necessary to satisfy any liabilities of such contractor or subcontractor for unpaid wages and liquidated damages as provided in the clause set forth in paragraph (2.) of this section.

4. Subcontracts. The contractor or subcontractor shall insert in any subcontracts the clauses set forth in paragraph (1.) through (4.) of this section and also a clause requiring the subcontractors to include these clauses in any lower tier subcontracts. The prime contractor shall be responsible for compliance by any subcontractor or lower tier subcontractor with the clauses set forth in paragraphs (1.) through (4.) of this section.

VI. SUBLETTING OR ASSIGNING THE CONTRACT

This provision is applicable to all Federal-aid construction contracts on the National Highway System.

1. The contractor shall perform with its own organization contract work amounting to not less than 30 percent (or a greater percentage if specified elsewhere in the contract) of the total original contract price, excluding any specialty items designated by the contracting agency. Specialty items may be performed by subcontract and the amount of any such specialty items performed may be deducted from the total original contract price before computing the amount of work required to be performed by the contractor's own organization (23 CFR 635.116).

a. The term “perform work with its own organization” refers to workers employed or leased by the prime contractor, and equipment owned or rented by the prime contractor, with or without operators. Such term does not include employees or equipment of a subcontractor or lower tier subcontractor, agents of the prime contractor, or any other assignees. The term may include payments for the costs of hiring leased employees from an employee leasing firm meeting all relevant Federal and State regulatory requirements. Leased employees may only be included in this term if the prime contractor meets all of the following conditions:

(1) the prime contractor maintains control over the supervision of the day-to-day activities of the leased employees;
(2) the prime contractor remains responsible for the quality of the work of the leased employees;
(3) the prime contractor retains all power to accept or exclude individual employees from work on the project; and
(4) the prime contractor remains ultimately responsible for the payment of predetermined minimum wages, the submission of payrolls, statements of compliance and all other Federal regulatory requirements.

b. "Specialty Items" shall be construed to be limited to work that requires highly specialized knowledge, abilities, or equipment not ordinarily available in the type of contracting organizations qualified and expected to bid or propose on the contract as a whole and in general are to be limited to minor components of the overall contract.

2. The contract amount upon which the requirements set forth in paragraph (1) of Section VI is computed includes the cost of material and manufactured products which are to be purchased or produced by the contractor under the contract provisions.

3. The contractor shall furnish (a) a competent superintendent or supervisor who is employed by the firm, has full authority to direct performance of the work in accordance with the contract requirements, and is in charge of all construction operations (regardless of who performs the work) and (b) such other of its own organizational resources (supervision, management, and engineering services) as the contracting officer determines is necessary to assure the performance of the contract.

4. No portion of the contract shall be sublet, assigned or otherwise disposed of except with the written consent of the contracting officer, or authorized representative, and such consent when given shall not be construed to relieve the contractor of any responsibility for the fulfillment of the contract. Written consent will be given only after the contracting agency has assured that each subcontract is evidenced in writing and that it contains all pertinent provisions and requirements of the prime contract.

5. The 30% self-performance requirement of paragraph (1) is not applicable to design-build contracts; however, contracting agencies may establish their own self-performance requirements.

VII. SAFETY: ACCIDENT PREVENTION

This provision is applicable to all Federal-aid construction contracts and to all related subcontracts.

1. In the performance of this contract the contractor shall comply with all applicable Federal, State, and local laws governing safety, health, and sanitation (23 CFR 635). The contractor shall provide all safeguards, safety devices and protective equipment and take any other needed actions as it determines, or as the contracting officer may determine, to be reasonably necessary to protect the life and health of employees on the job and the safety of the public and to protect property in connection with the performance of the work covered by the contract.

2. It is a condition of this contract, and shall be made a condition of each subcontract, which the contractor enters into pursuant to this contract, that the contractor and any subcontractor shall not permit any employee, in performance of the contract, to work in surroundings or under conditions which are unsanitary, hazardous or dangerous to his/her health or safety, as determined under construction safety and health standards (29 CFR 1926) promulgated by the Secretary of Labor, in accordance with Section 107 of the Contract Work Hours and Safety Standards Act (40 U.S.C. 3704).

3. Pursuant to 29 CFR 1926.3, it is a condition of this contract that the Secretary of Labor or authorized representative thereof, shall have right of entry to any site of contract performance to inspect or investigate the matter of compliance with the construction safety and health standards and to carry out the duties of the Secretary under Section 107 of the Contract Work Hours and Safety Standards Act (40 U.S.C.3704).

VIII. FALSE STATEMENTS CONCERNING HIGHWAY PROJECTS

This provision is applicable to all Federal-aid construction contracts and to all related subcontracts.

In order to assure high quality and durable construction in conformity with approved plans and specifications and a high degree of reliability on statements and representations made by engineers, contractors, suppliers, and workers on Federal-aid highway projects, it is essential that all persons concerned with the project perform their functions as carefully, thoroughly, and honestly as possible. Willful falsification, distortion, or misrepresentation with respect to any facts related to the project is a violation of Federal law. To prevent any misunderstanding regarding the seriousness of these and similar acts, Form FHWA-1022 shall be posted on each Federal-aid highway project (23 CFR 635) in one or more places where it is readily available to all persons concerned with the project:

18 U.S.C. 1020 reads as follows:

"Whoever, being an officer, agent, or employee of the United States, or of any State or Territory, or whoever, whether a person, association, firm, or corporation, knowingly makes any false statement, false representation, or false report as to the character, quality, quantity, or cost of the material used or to be used, or the quantity or quality of the work performed or to be performed, or the cost thereof in connection with the submission of plans, maps, specifications, contracts, or costs of construction on any highway or related project submitted for approval to the Secretary of Transportation; or

Whoever knowingly makes any false statement, false representation, false report or false claim with respect to the character, quality, quantity, or cost of any work performed or to be performed, or materials furnished or to be furnished, in connection with the construction of any highway or related project approved by the Secretary of Transportation; or

Whoever knowingly makes any false statement or false representation as to material fact in any statement, certificate, or report submitted pursuant to provisions of the Federal-aid Roads Act approved July 1, 1916, (39 Stat. 355), as amended and supplemented;

Shall be fined under this title or imprisoned not more than 5 years or both."

IX. IMPLEMENTATION OF CLEAN AIR ACT AND FEDERAL WATER POLLUTION CONTROL ACT

This provision is applicable to all Federal-aid construction contracts and to all related subcontracts.

By submission of this bid/proposal or the execution of this contract, or subcontract, as appropriate, the bidder, proposer, Federal-aid construction contractor, or subcontractor, as appropriate, will be deemed to have stipulated as follows:

1. That any person who is or will be utilized in the performance of this contract is not prohibited from receiving an award due to a violation of Section 508 of the Clean Water Act or Section 306 of the Clean Air Act.
2. That the contractor agrees to include or cause to be included the requirements of paragraph (1) of this Section X in every subcontract, and further agrees to take such action as the contracting agency may direct as a means of enforcing such requirements.

X. CERTIFICATION REGARDING DEBARMENT, SUSPENSION, INELIGIBILITY AND VOLUNTARY EXCLUSION

This provision is applicable to all Federal-aid construction contracts, design-build contracts, subcontracts, lower-tier subcontracts, purchase orders, lease agreements, consultant contracts or any other covered transaction requiring FHWA approval or that is estimated to cost $25,000 or more – as defined in 2 CFR Parts 180 and 1200.

1**. Instructions for Certification – First Tier Participants:**

a. By signing and submitting this proposal, the prospective first tier participant is providing the certification set out below.

b. The inability of a person to provide the certification set out below will not necessarily result in denial of participation in this covered transaction. The prospective first tier participant shall submit an explanation of why it cannot provide the certification set out below. The certification or explanation will be considered in connection with the department or agency's determination whether to enter into this transaction. However, failure of the prospective first tier participant to furnish a certification or an explanation shall disqualify such a person from participation in this transaction.

c. The certification in this clause is a material representation of fact upon which reliance was placed when the contracting agency determined to enter into this transaction. If it is later determined that the prospective participant knowingly rendered an erroneous certification, in addition to other remedies available to the Federal Government, the contracting agency may terminate this transaction for cause of default.

d. The prospective first tier participant shall provide immediate written notice to the contracting agency to whom this proposal is submitted if any time the prospective first tier participant learns that its certification was erroneous when submitted or has become erroneous by reason of changed circumstances.

e. The terms "covered transaction," "debarred," "suspended," "ineligible," "participant," "person," "principal," and "voluntarily excluded," as used in this clause, are defined in 2 CFR Parts 180 and 1200. “First Tier Covered Transactions” refers to any covered transaction between a grantee or subgrantee of Federal funds and a participant (such as the prime or general contract). “Lower Tier Covered Transactions” refers to any covered transaction under a First Tier Covered Transaction (such as subcontracts). “First Tier Participant” refers to the participant who has entered into a covered transaction with a grantee or subgrantee of Federal funds (such as the prime or general contractor). “Lower Tier Participant” refers any participant who has entered into a covered transaction with a First Tier Participant or other Lower Tier Participants (such as subcontractors and suppliers).

f. The prospective first tier participant agrees by submitting this proposal that, should the proposed covered transaction be entered into, it shall not knowingly enter into any lower tier covered transaction with a person who is debarred, suspended, declared ineligible, or voluntarily excluded from participation in this covered transaction, unless authorized by the department or agency entering into this transaction.

g. The prospective first tier participant further agrees by submitting this proposal that it will include the clause titled "Certification Regarding Debarment, Suspension, Ineligibility and Voluntary Exclusion-Lower Tier Covered Transactions," provided by the department or contracting agency, entering into this covered transaction, without modification, in all lower tier covered transactions and in all solicitations for lower tier covered transactions exceeding the $25,000 threshold.

h. A participant in a covered transaction may rely upon a certification of a prospective participant in a lower tier covered transaction that is not debarred, suspended, ineligible, or voluntarily excluded from the covered transaction, unless it knows that the certification is erroneous. A participant is responsible for ensuring that its principals are not suspended, debarred, or otherwise ineligible to participate in covered transactions. To verify the eligibility of its principals, as well as the eligibility of any lower tier prospective participants, each participant may, but is not required to, check the Excluded Parties List System website (https://www.epls.gov/), which is compiled by the General Services Administration.

i. Nothing contained in the foregoing shall be construed to require the establishment of a system of records in order to render in good faith the certification required by this clause. The knowledge and information of the prospective participant is not required to exceed that which is normally possessed by a prudent person in the ordinary course of business dealings.

j. Except for transactions authorized under paragraph (f) of these instructions, if a participant in a covered transaction knowingly enters into a lower tier covered transaction with a person who is suspended, debarred, ineligible, or voluntarily excluded from participation in this transaction, in addition to other remedies available to the Federal Government, the department or agency may terminate this transaction for cause or default.

* * * * *

2. Certification Regarding Debarment, Suspension, Ineligibility and Voluntary Exclusion – First Tier Participants:

a. The prospective first tier participant certifies to the best of its knowledge and belief, that it and its principals:

(1) Are not presently debarred, suspended, proposed for debarment, declared ineligible, or voluntarily excluded from participating in covered transactions by any Federal department or agency;

(2) Have not within a three-year period preceding this proposal been convicted of or had a civil judgment rendered against them for commission of fraud or a criminal offense in connection with obtaining, attempting to obtain, or performing a public (Federal, State or local) transaction or contract under a public transaction; violation of Federal or State antitrust statutes or commission of embezzlement, theft, forgery, bribery, falsification or destruction of records, making false statements, or receiving stolen property;

(3) Are not presently indicted for or otherwise criminally or civilly charged by a governmental entity (Federal, State or local) with commission of any of the offenses enumerated in paragraph (a)(2) of this certification; and

(4) Have not within a three-year period preceding this application/proposal had one or more public transactions (Federal, State or local) terminated for cause or default.

b. Where the prospective participant is unable to certify to any of the statements in this certification, such prospective participant shall attach an explanation to this proposal.

2. **Instructions for Certification - Lower Tier Participants:**

(Applicable to all subcontracts, purchase orders and other lower tier transactions requiring prior FHWA approval or estimated to cost $25,000 or more - 2 CFR Parts 180 and 1200)

a. By signing and submitting this proposal, the prospective lower tier is providing the certification set out below.

b. The certification in this clause is a material representation of fact upon which reliance was placed when this transaction was entered into. If it is later determined that the prospective lower tier participant knowingly rendered an erroneous certification, in addition to other remedies available to the Federal Government, the department, or agency with which this transaction originated may pursue available remedies, including suspension and/or debarment.

c. The prospective lower tier participant shall provide immediate written notice to the person to which this proposal is submitted if at any time the prospective lower tier participant learns that its certification was erroneous by reason of changed circumstances.

d. The terms "covered transaction," "debarred," "suspended," "ineligible," "participant," "person," "principal," and "voluntarily excluded," as used in this clause, are defined in 2 CFR Parts 180 and 1200. You may contact the person to which this proposal is submitted for assistance in obtaining a copy of those regulations. “First Tier Covered Transactions” refers to any covered transaction between a grantee or subgrantee of Federal funds and a participant (such as the prime or general contract). “Lower Tier Covered Transactions” refers to any covered transaction under a First Tier Covered Transaction (such as subcontracts). “First Tier Participant” refers to the participant who has entered into a covered transaction with a grantee or subgrantee of Federal funds (such as the prime or general contractor). “Lower Tier Participant” refers any participant who has entered into a covered transaction with a First Tier Participant or other Lower Tier Participants (such as subcontractors and suppliers).

e. The prospective lower tier participant agrees by submitting this proposal that, should the proposed covered transaction be entered into, it shall not knowingly enter into any lower tier covered transaction with a person who is debarred, suspended, declared ineligible, or voluntarily excluded from participation in this covered transaction, unless authorized by the department or agency with which this transaction originated.

f. The prospective lower tier participant further agrees by submitting this proposal that it will include this clause titled "Certification Regarding Debarment, Suspension, Ineligibility and Voluntary Exclusion-Lower Tier Covered Transaction," without modification, in all lower tier covered transactions and in all solicitations for lower tier covered transactions exceeding the $25,000 threshold.

g. A participant in a covered transaction may rely upon a certification of a prospective participant in a lower tier covered transaction that is not debarred, suspended, ineligible, or voluntarily excluded from the covered transaction, unless it knows that the certification is erroneous. A participant is responsible for ensuring that its principals are not suspended, debarred, or otherwise ineligible to participate in covered transactions. To verify the eligibility of its principals, as well as the eligibility of any lower tier prospective participants, each participant may, but is not required to, check the Excluded Parties List System website (https://www.epls.gov/), which is compiled by the General Services Administration.

h. Nothing contained in the foregoing shall be construed to require establishment of a system of records in order to render in good faith the certification required by this clause. The knowledge and information of participant is not required to exceed that which is normally possessed by a prudent person in the ordinary course of business dealings.

i. Except for transactions authorized under paragraph e of these instructions, if a participant in a covered transaction knowingly enters into a lower tier covered transaction with a person who is suspended, debarred, ineligible, or voluntarily excluded from participation in this transaction, in addition to other remedies available to the Federal Government, the

department or agency with which this transaction originated may pursue available remedies, including suspension and/or debarment.

* * * * *

Certification Regarding Debarment, Suspension, Ineligibility and Voluntary Exclusion--Lower Tier Participants:

1. The prospective lower tier participant certifies, by submission of this proposal, that neither it nor its principals is presently debarred, suspended, proposed for debarment, declared ineligible, or voluntarily excluded from participating in covered transactions by any Federal department or agency.

2. Where the prospective lower tier participant is unable to certify to any of the statements in this certification, such prospective participant shall attach an explanation to this proposal.

* * * * *

XI. CERTIFICATION REGARDING USE OF CONTRACT FUNDS FOR LOBBYING

This provision is applicable to all Federal-aid construction contracts and to all related subcontracts which exceed $100,000 (49 CFR 20).

1. The prospective participant certifies, by signing and submitting this bid or proposal, to the best of his or her knowledge and belief, that:

a. No Federal appropriated funds have been paid or will be paid, by or on behalf of the undersigned, to any person for influencing or attempting to influence an officer or employee of any Federal agency, a Member of Congress, an officer or employee of Congress, or an employee of a Member of Congress in connection with the awarding of any Federal contract, the making of any Federal grant, the making of any Federal loan, the entering into of any cooperative agreement, and the extension, continuation, renewal, amendment, or modification of any Federal contract, grant, loan, or cooperative agreement.

b. If any funds other than Federal appropriated funds have been paid or will be paid to any person for influencing or attempting to influence an officer or employee of any Federal agency, a Member of Congress, an officer or employee of Congress, or an employee of a Member of Congress in connection with this Federal contract, grant, loan, or cooperative agreement, the undersigned shall complete and submit Standard Form-LLL, "Disclosure Form to Report Lobbying," in accordance with its instructions.

2. This certification is a material representation of fact upon which reliance was placed when this transaction was made or entered into. Submission of this certification is a prerequisite for making or entering into this transaction imposed by 31 U.S.C. 1352. Any person who fails to file the required certification shall be subject to a civil penalty of not less than $10,000 and not more than $100,000 for each such failure.

3. The prospective participant also agrees by submitting its bid or proposal that the participant shall require that the language of this certification be included in all lower tier subcontracts, which exceed $100,000 and that all such recipients shall certify and disclose accordingly.

ATTACHMENT A - EMPLOYMENT AND MATERIALS PREFERENCE FOR APPALACHIAN DEVELOPMENT HIGHWAY SYSTEM OR APPALACHIAN LOCAL ACCESS ROAD CONTRACTS

This provision is applicable to all Federal-aid projects funded under the Appalachian Regional Development Act of 1965.

1. During the performance of this contract, the contractor undertaking to do work which is, or reasonably may be, done as on-site work, shall give preference to qualified persons who regularly reside in the labor area as designated by the DOL wherein the contract work is situated, or the subregion, or the Appalachian counties of the State wherein the contract work is situated, except:

a. To the extent that qualified persons regularly residing in the area are not available.

b. For the reasonable needs of the contractor to employ supervisory or specially experienced personnel necessary to assure an efficient execution of the contract work.

c. For the obligation of the contractor to offer employment to present or former employees as the result of a lawful collective bargaining contract, provided that the number of nonresident persons employed under this subparagraph (1c) shall not exceed 20 percent of the total number of employees employed by the contractor on the contract work, except as provided in subparagraph (4) below.

2. The contractor shall place a job order with the State Employment Service indicating (a) the classifications of the laborers, mechanics and other employees required to perform the contract work, (b) the number of employees required in each classification, (c) the date on which the participant estimates such employees will be required, and (d) any other pertinent information required by the State Employment Service to complete the job order form. The job order may be placed with the State Employment Service in writing or by telephone. If during the course of the contract work, the information submitted by the contractor in the original job order is substantially modified, the participant shall promptly notify the State Employment Service.

3. The contractor shall give full consideration to all qualified job applicants referred to him by the State Employment Service. The contractor is not required to grant employment to any job applicants who, in his opinion, are not qualified to perform the classification of work required.

4. If, within one week following the placing of a job order by the contractor with the State Employment Service, the State Employment Service is unable to refer any qualified job applicants to the contractor, or less than the number requested, the State Employment Service will forward a certificate to the contractor indicating the unavailability of applicants. Such certificate shall be made a part of the contractor's permanent project records. Upon receipt of this certificate, the contractor may employ persons who do not normally reside in the labor area to fill positions covered by the certificate, notwithstanding the provisions of subparagraph (1c) above.

5. The provisions of 23 CFR 633.207(e) allow the contracting agency to provide a contractual preference for the use of mineral resource materials native to the Appalachian region.

6. The contractor shall include the provisions of Sections 1 through 4 of this Attachment A in every subcontract for work which is, or reasonably may be, done as on-site work.

EXHIBIT 2

DB TEAM'S KEY PERSONNEL

Executed Form G

EXHIBIT 3

RESERVED

EXHIBIT 4

RIGHT OF WAY
(Existing Right of Way and Required Right of Way)

The form and content of this Exhibit 4 is set forth on the Sharepoint site.

EXHIBIT 5

RESERVED

EXHIBIT 6

RESERVED

EXHIBIT 7

RESERVED

EXHIBIT 8

FEDERAL REQUIREMENTS

Exhibit Description	No. of Pages
Attachment 1 – Federal Requirements for Federal Aid Construction Facilities	2
Attachment 2 – Required Contract Provisions, Federal-Aid Construction Contracts - FHWA Form 1273	12
Attachment 3 – GDOT Special Provision - Modifications to FHWA Form 1273	1
Attachment 4 – Federal Prevailing Wage Rate	25
Attachment 5 – Standard Federal Equal Employment Opportunity Construction Contract Specifications (Executive Order 11246) (43 FR 14895)	4
Attachment 6 – Disadvantaged Business Enterprise Program - Criteria for Acceptability	9
Attachment 7 – Debarment and Suspension Certification	1
Attachment 8 – Certification Regarding Use of Contract Funds For Lobbying	2
Attachment 9 – Reserved	XX
Attachment 10 – Compliance with Buy America Requirements	2

ATTACHMENT 1 TO EXHIBIT 8

FEDERAL REQUIREMENTS FOR FEDERAL-AID CONSTRUCTION FACILITIES

GENERAL. — The work herein proposed will be financed in whole or in part with federal funds, and therefore all of the statutes, rules and regulations promulgated by the federal government and applicable to work financed in whole or in part with federal funds will apply to such work. The "Required Contract Provisions, Federal-Aid Construction Contracts, Form FHWA-1273," are included in this Exhibit 8. Whenever in said required contract provisions references are made to:

(a) "SHA contracting officer," "SHA resident engineer," or "authorized representative of the SHA," such references shall be construed to mean GDOT or its Authorized Representative;

(b) "contractor," "prime contractor," "bidder" or "prospective primary participant," such references shall be construed to mean Design-Build Team or its authorized representative and/or the Design-Build Contractor or its authorized representative, as may be appropriate under the circumstances;

(c) "contract" or "prime contract," such references shall be construed to mean the Design-Build Agreement;

(d) "subcontractor," "supplier," "vendor," "prospective lower tier participant" or "lower tier subcontractor," such references shall be construed to mean, as appropriate, Contractors other than the Design-Build Contractor; and

(e) "department," "agency" or "department or agency entering into this transaction," such references shall be construed to mean GDOT, except where a different department or agency is specified.

PERFORMANCE OF PREVIOUS CONTRACT. — In addition to the provisions in Section II, "NONDISCRIMINATION," and Section VI, "SUBLETTING OR ASSIGNING THE CONTRACT," of the Form FHWA-1273 required contract provisions, Design-Build Team shall cause the contractor to comply with the following:

The bidder shall execute the CERTIFICATION WITH REGARD TO THE PERFORMANCE OF PREVIOUS CONTRACTS OR SUBCONTRACTS SUBJECT TO THE EQUAL OPPORTUNITY CLAUSE AND THE FILING OF REQUIRED REPORTS located in the proposal. No request for subletting or assigning any portion of the contract in excess of $10,000 will be considered under the provisions of Section VI of the required contract provisions unless such request is accompanied by the CERTIFICATION referred to above, executed by the proposed subcontractor.

NON-COLLUSION PROVISION. — The provisions in this section are applicable to all contracts except contracts for Federal Aid Secondary Projects. Title 23, United States Code, Section 112, requires as a condition precedent to approval by the Federal Highway Administrator of the contract for this work that each bidder file a sworn statement executed by, or on behalf of, the person, firm, association, or corporation to whom such contract is to be awarded, certifying that such person, firm, association, or corporation has not, either directly or

indirectly, entered into any agreement, participated in any collusion, or otherwise taken any action in restraint of free competitive bidding in connection with the submitted bid. A form to make the non-collusion affidavit statement required by 23 U.S.C. § 112 as a certification under penalty of perjury rather than as a sworn statement as permitted by 28 U.S.C. § 1746, is included in the Proposal.

PARTICIPATION BY DISADVANTAGED BUSINESS ENTERPRISES IN SUBCONTRACTING. — Part 26, Title 49, Code of Federal Regulations applies to this Project. Pertinent sections of said Code are incorporated within other articles or sections of the Agreement and any other Contract and the GDOT Disadvantaged Business Enterprise Program adopted pursuant to 49 CFR Part 26.

CONVICT PRODUCED MATERIALS

a. FHWA Federal-aid projects are subject to 23 C.F.R. § 635.417, Convict produced materials.

b. Materials produced after July 1, 1991, by convict labor may only be incorporated in a Federal aid highway construction project if such materials have been: (i) produced by convicts who are on parole, supervised release, or probation from a prison, or (ii) produced in a prison project in which convicts, during the 12 month period ending July 1, 1987, produced materials for use in Federal aid highway construction projects, and the cumulative annual production amount of such materials for use in Federal aid highway construction does not exceed the amount of such materials produced in such project for use in Federal aid highway construction during the 12 month period ending July 1, 1987.

ACCESS TO RECORDS

a. As required by 49 C.F.R. 18.36(i)(10), Design-Build Team and its Contractors shall allow FHWA and the Comptroller General of the United States, or their duly authorized representatives, access to all books, documents, papers, and records of Design-Build Team and Contractors which are directly pertinent to any grantee or subgrantee contract, for the purpose of making audit, examination, excerpts, and transcriptions thereof. In addition, as required by 49 C.F.R. 18.36(i)(11), Design-Build Team and its Contractors shall retain all such books, documents, papers, and records for three years after final payment is made pursuant to any such contract and all other pending matters are closed.

b. Design-Build Team agrees to include this section in each Contract at each tier, without modification except as appropriate to identify the Contractor who will be subject to its provisions.

REPLACE PAGE WITH FHWA FORM 1273 PDF

ATTACHMENT 3 TO EXHIBIT 8

GDOT Special Provision
Modifications to FHWA Form 1273

1. Subsections IV.3(a); Delete the wording referencing "social security number" in the second sentence and substitute "and the last four digits of the social security number".

ATTACHMENT 4 TO EXHIBIT 8

FEDERAL PREVAILING WAGE RATE

(Subject to change)

General Decision Number: GA1~~4~~50001 01/0~~3~~2/201~~4~~5 GA1

Superseded General Decision Number: GA201~~3~~40001

State: Georgia

Construction Type: Highway

Counties: Bartow, Catoosa, Chattooga, Dade, Fannin, Floyd, Gilmer, Gordon, Haralson, Murray, Paulding, Pickens, Polk, Walker and Whitfield Counties in Georgia.

HIGHWAY CONSTRUCTION PROJECTS

Note: Executive Order (EO) 13658 establishes an hourly minimum wage of $10.10 for 2015 that applies to all contracts subject to the Davis-Bacon Act for which the solicitation is issued on or after January 1, 2015. If this contract is covered by the EO, the contractor must pay all workers in any classification listed on this wage determination at least $10.10 (or the applicable wage rate listed on this wage determination, if it is higher) for all hours spent performing on the contract. The EO minimum wage rate will be adjusted annually. Additional information on contractor requirements and worker protections under the EO is available at www.dol.gov/whd/govcontracts.

~~HIGHWAY CONSTRUCTION PROJECTS~~

Modification Number	Publication Date
0	1/0~~6~~2/201~~2~~5

SUGA2011-001 03/07/2011

			Rates	Fringes
	CARPENTER	$	11.45	
	CEMENT MASON/CONCRETE FINISHER	$	11.15	
LABORER:				
	ASPHALT RAKER	$	11.00	
	ASPHALT SCREED PERSON	$	10.50	
	COMMON OR GENERAL	$	9.00	
	GUARDRAIL ERECTOR	$	13.50	
	MILLING MACHINE GROUND PERSON	$	10.00	
	PIPE LAYER	$	10.20	
	TRAFFIC CONTROL BARRICADE FLAGGER	$	10.00	

POWER EQUIPMENT OPERATOR:			
	ASPHALT DISTRIBUTOR	$	14.10
	ASPHALT PAVER/SPREADER	$	12.00
	BACKHOE/EXCAVATOR	$	10.80
	BULLDOZER	$	11.60
	COMPACTOR	$	10.00
	CRANE/DRAGLINE	$	17.50
	CRUSHER	$	14.00
	FRONT END LOADER	$	10.70
	MECHANIC	$	14.50
	MILLING MACHINE	$	11.50
	MOTORGRADER FINE GRADE	$	14.55
	ROLLER	$	10.00
	WATER TRUCK	$	11.25
TRUCK DRIVER:			
	26,000 GVW & UNDER	$	10.79
	26,001 GVW & OVER	$	11.00

WELDERS - Receive rate prescribed for craft performing operation to which welding is incidental.

General Decision Number: GA1~~4~~50002 01/0~~3~~2/201~~4~~5 GA2

Superseded General Decision Number: GA201~~3~~40002

State: Georgia

Construction Type: Highway

Counties: Banks, Dawson, Forsyth, Franklin, Habersham, Hall, Hart, Lumpkin, Rabun, Stephens, Towns, Union and White Counties in Georgia.

HIGHWAY CONSTRUCTION PROJECTS

Note: Executive Order (EO) 13658 establishes an hourly minimum wage of $10.10 for 2015 that applies to all contracts subject to the Davis-Bacon Act for which the solicitation is issued on or after January 1, 2015. If this contract is covered by the EO, the contractor must pay all workers in any classification listed on this wage determination at least $10.10 (or the applicable wage rate listed on this wage determination, if it is higher) for all hours spent performing on the contract. The EO minimum wage rate will be adjusted annually. Additional information on contractor requirements and worker protections under the EO is available at www.dol.gov/whd/govcontracts.

~~HIGHWAY CONSTRUCTION PROJECTS~~

Modification Number	Publication Date
0	1/0~~3~~2/201~~4~~5

SUGA2011-002 03/07/2011

			Rates	Fringes
	CARPENTER	$	11.45	
	CEMENT MASON/CONCRETE FINISHER	$	11.30	
LABORER:				
	ASPHALT RAKER	$	11.00	
	ASPHALT SCREED PERSON	$	10.50	
	COMMON OR GENERAL	$	9.00	
	GUARDRAIL ERECTOR	$	13.50	
	MILLING MACHINE GROUND PERSON	$	10.00	
	PIPE LAYER	$	10.20	
	TRAFFIC CONTROL BARRICADE FLAGGER	$	10.00	
POWER EQUIPMENT OPERATOR:				
	ASPHALT DISTRIBUTOR	$	14.10	
	ASPHALT PAVER/SPREADER	$	12.00	
	BACKHOE/EXCAVATOR	$	10.80	

	BULLDOZER	$	11.60
	COMPACTOR	$	10.00
	CRANE/DRAGLINE	$	17.50
	CRUSHER	$	14.00
	FRONT END LOADER	$	10.70
	MATERIAL TRANSFER VEHICLE (SHUTTLE BUGGY)	$	11.30
	MECHANIC	$	13.98
	MILLING MACHINE	$	11.50
	MOTORGRADER FINE GRADE	$	14.55
	MOTORGRADER/BLADE	$	14.00
	ROLLER	$	10.00
	WATER TRUCK	$	11.25
TRUCK DRIVER:			
	26,000 GVW & UNDER	$	10.79
	26,00~~0~~1 GVW & OVER	$	16.25

WELDERS - Receive rate prescribed for craft performing operation to which welding is incidental.

==========

General Decision Number: GA1~~4~~50003 01/0~~3~~2/201~~4~~5 GA3

Superseded General Decision Number: GA201~~3~~40003

State: Georgia

Construction Type: Highway

Counties: Cherokee, Clayton, Cobb, Dekalb, Douglas, Fayette, Fulton, Gwinnett, Henry and Rockdale Counties in Georgia.

HIGHWAY CONSTRUCTION PROJECTS

Note: Executive Order (EO) 13658 establishes an hourly minimum wage of $10.10 for 2015 that applies to all contracts subject to the Davis-Bacon Act for which the solicitation is issued on or after January 1, 2015. If this contract is covered by the EO, the contractor must pay all workers in any classification listed on this wage determination at least $10.10 (or the applicable wage rate listed on this wage determination, if it is higher) for all hours spent performing on the contract. The EO minimum wage rate will be adjusted annually. Additional information on contractor requirements and worker protections under the EO is available at www.dol.gov/whd/govcontracts.

~~HIGHWAY CONSTRUCTION PROJECTS~~

Modification Number	Publication Date
0	1/0~~3~~2/201~~4~~5

SUGA2011-003 03/07/2011

			Rates	Fringes
	CARPENTER	$	11.16	
	CEMENT MASON/CONCRETE FINISHER	$	10.99	
LABORER:				
	ASPHALT RAKER	$	11.00	
	ASPHALT SCREED PERSON	$	10.50	
	COMMON OR GENERAL	$	9.00	
	FORM SETTER	$	10.35	
	GUARDRAIL ERECTOR	$	13.50	
	MILLING MACHINE GROUND PERSON	$	10.00	
	PIPE LAYER	$	10.20	
	TRAFFIC CONTROL BARRICADE FLAGGER	$	10.00	
POWER EQUIPMENT OPERATOR:				
	ASPHALT DISTRIBUTOR	$	14.10	
	ASPHALT PAVER/SPREADER	$	12.28	

	BACKHOE/EXCAVATOR	$	10.80
	BULLDOZER	$	11.60
	COMPACTOR	$	10.00
	CONCRETE CURB MACHINE	$	16.45
	CRANE/DRAGLINE	$	17.50
	CRUSHER	$	14.00
	FRONT END LOADER	$	10.70
	MATERIAL TRANSFER VEHICLE (SHUTTLE BUGGY)	$	11.30
	MECHANIC	$	14.47
	MILLING MACHINE	$	12.37
	MOTORGRADER FINE GRADE	$	14.55
	MOTORGRADER/BLADE	$	14.39
	ROLLER	$	10.00
	SCRAPER-PAN	$	10.00
	SWEEPER TRUCK	$	14.21
	WATER TRUCK	$	11.25
TRUCK DRIVER:			
	26,000 GVW & UNDER	$	10.76
	26,00~~0~~1 GVW & OVER	$	14.91

WELDERS - Receive rate prescribed for craft performing operation to which welding is incidental.

General Decision Number: GA1~~4~~50004 01/0~~3~~2/201~~4~~5 GA4

Superseded General Decision Number: GA201~~3~~40004

State: Georgia

Construction Type: Highway

Counties: Butts, Carroll, Coweta, Heard, Lamar, Meriwether, Pike, Spalding, Troup, and Upson Counties in Georgia.

HIGHWAY CONSTRUCTION PROJECTS

Note: Executive Order (EO) 13658 establishes an hourly minimum wage of $10.10 for 2015 that applies to all contracts subject to the Davis-Bacon Act for which the solicitation is issued on or after January 1, 2015. If this contract is covered by the EO, the contractor must pay all workers in any classification listed on this wage determination at least $10.10 (or the applicable wage rate listed on this wage determination, if it is higher) for all hours spent performing on the contract. The EO minimum wage rate will be adjusted annually. Additional information on contractor requirements and worker protections under the EO is available at www.dol.gov/whd/govcontracts.

~~HIGHWAY CONSTRUCTION PROJECTS~~

Modification Number	Publication Date
0	1/0~~3~~2/201~~4~~5

SUGA2011-004 03/07/2011

			Rates	Fringes
	CARPENTER	$	11.45	
	CEMENT MASON/CONCRETE FINISHER	$	11.22	
LABORER:				
	ASPHALT RAKER	$	11.00	
	ASPHALT SCREED PERSON	$	10.50	
	COMMON OR GENERAL	$	9.00	
	GUARDRAIL ERECTOR	$	13.50	
	MILLING MACHINE GROUND PERSON	$	10.00	
	PIPE LAYER	$	10.20	
	TRAFFIC CONTROL BARRICADE FLAGGER	$	9.77	
POWER EQUIPMENT OPERATOR:				
	ASPHALT DISTRIBUTOR	$	14.10	
	ASPHALT PAVER/SPREADER	$	12.00	
	BACKHOE/EXCAVATOR	$	10.80	

	BULLDOZER	$	11.60
	COMPACTOR	$	10.00
	CRANE/DRAGLINE	$	17.50
	CRUSHER	$	14.00
	FRONT END LOADER	$	10.70
	MATERIAL TRANSFER VEHICLE (SHUTTLE BUGGY)	$	11.30
	MECHANIC	$	14.50
	MILLING MACHINE	$	11.50
	MOTORGRADER FINE GRADE	$	14.55
	MOTORGRADER/BLADE	$	14.00
	ROLLER	$	10.00
	WATER TRUCK	$	11.25
TRUCK DRIVER:			
	26,000 GVW & UNDER	$	10.76
	26,00~~0~~1 GVW & OVER	$	12.90

WELDERS - Receive rate prescribed for craft performing operation to which welding is incidental.

==========

General Decision Number: GA1~~4~~50005 01/0~~3~~2/201~~4~~5 GA5

Superseded General Decision Number: GA201~~3~~40005

State: Georgia

Construction Type: Highway

Counties: Baldwin, Bibb, Crawford, Houston, Jones, Monroe, Peach, Pulaski, Putnam, Twiggs, and Wilkinson Counties in Georgia.

HIGHWAY CONSTRUCTION PROJECTS

Note: Executive Order (EO) 13658 establishes an hourly minimum wage of $10.10 for 2015 that applies to all contracts subject to the Davis-Bacon Act for which the solicitation is issued on or after January 1, 2015. If this contract is covered by the EO, the contractor must pay all workers in any classification listed on this wage determination at least $10.10 (or the applicable wage rate listed on this wage determination, if it is higher) for all hours spent performing on the contract. The EO minimum wage rate will be adjusted annually. Additional information on contractor requirements and worker protections under the EO is available at www.dol.gov/whd/govcontracts.

~~HIGHWAY CONSTRUCTION PROJECTS~~

Modification Number	Publication Date
0	1/0~~3~~2/201~~4~~5

SUGA2011-005 03/07/2011

			Rates	Fringes
	CARPENTER	$	11.45	
	CEMENT MASON/CONCRETE FINISHER	$	11.33	
LABORER:				
	ASPHALT RAKER	$	11.00	
	ASPHALT SCREED PERSON	$	10.50	
	COMMON OR GENERAL	$	9.00	
	MILLING MACHINE GROUND PERSON	$	10.00	
	PIPE LAYER	$	10.20	
	TRAFFIC CONTROL BARRICADE FLAGGER	$	9.57	
POWER EQUIPMENT OPERATOR:				
	ASPHALT DISTRIBUTOR	$	14.10	
	ASPHALT PAVER/SPREADER	$	12.00	
	BACKHOE/EXCAVATOR	$	10.80	
	BULLDOZER	$	11.60	

	COMPACTOR	$	10.00
	CRANE/DRAGLINE	$	17.50
	CRUSHER	$	14.00
	FRONT END LOADER	$	10.70
	MATERIAL TRANSFER VEHICLE (SHUTTLE BUGGY)	$	11.30
	MECHANIC	$	14.50
	MILLING MACHINE	$	11.50
	MOTORGRADER FINE GRADE	$	14.55
	MOTORGRADER/BLADE	$	14.00
	ROLLER	$	10.00
	WATER TRUCK	$	11.25
TRUCK DRIVER:			
	26,000 GVW & UNDER	$	10.76
	26,00~~0~~1 GVW & OVER	$	11.88

WELDERS - Receive rate prescribed for craft performing operation to which welding is incidental.

General Decision Number: GA1~~4~~50006 01/0~~3~~2/201~~4~~5 GA6

Superseded General Decision Number: GA201~~3~~40006

State: Georgia

Construction Type: Highway

Counties: Barrow, Clarke, Elbert, Greene, Jackson, Jasper, Madison, Morgan, Newton, Oconee, Oglethorpe and Walton Counties in Georgia.

HIGHWAY CONSTRUCTION PROJECTS

Note: Executive Order (EO) 13658 establishes an hourly minimum wage of $10.10 for 2015 that applies to all contracts subject to the Davis-Bacon Act for which the solicitation is issued on or after January 1, 2015. If this contract is covered by the EO, the contractor must pay all workers in any classification listed on this wage determination at least $10.10 (or the applicable wage rate listed on this wage determination, if it is higher) for all hours spent performing on the contract. The EO minimum wage rate will be adjusted annually. Additional information on contractor requirements and worker protections under the EO is available at www.dol.gov/whd/govcontracts.

~~HIGHWAY CONSTRUCTION PROJECTS~~

Modification Number	Publication Date
0	1/0~~3~~2/201~~4~~5

SUGA2011-006 03/07/2011

			Rates	Fringes
	CARPENTER	$	11.45	
	CEMENT MASON/CONCRETE FINISHER	$	11.36	
LABORER:				
	ASPHALT RAKER	$	11.00	
	ASPHALT SCREED PERSON	$	10.50	
	COMMON OR GENERAL	$	9.00	
	FORM SETTER	$	10.35	
	GUARDRAIL ERECTOR	$	13.50	
	MILLING MACHINE GROUND PERSON	$	10.00	
	PIPE LAYER	$	10.20	
	TRAFFIC CONTROL BARRICADE FLAGGER	$	9.83	
POWER EQUIPMENT OPERATOR:				
	ASPHALT DISTRIBUTOR	$	14.10	
	ASPHALT PAVER/SPREADER	$	12.21	

	BACKHOE/EXCAVATOR	$	10.80
	BROOM	$	11.80
	BULLDOZER	$	11.60
	COMPACTOR	$	10.00
	CRANE/DRAGLINE	$	17.50
	CRUSHER	$	14.00
	FRONT END LOADER	$	10.70
	MATERIAL TRANSFER VEHICLE (SHUTTLE BUGGY)	$	11.30
	MECHANIC	$	14.50
	MILLING MACHINE	$	11.50
	MOTORGRADER FINE GRADE	$	14.55
	MOTORGRADER/BLADE	$	14.00
	ROLLER	$	10.00
	WATER TRUCK	$	11.25
TRUCK DRIVER:			
	26,000 GVW & UNDER	$	10.76
	26,00~~0~~1 GVW & OVER	$	13.66

WELDERS - Receive rate prescribed for craft performing operation to which welding is incidental.

General Decision Number: GA1~~4~~50007 01/0~~3~~2/201~~4~~5 GA7

Superseded General Decision Number: GA201~~3~~40007

State: Georgia

Construction Type: Highway

Counties: Burke, Columbia, Glascock, Hancock, Jefferson, Jenkins, Lincoln, Mc~~d~~Duffie, Richmond, Taliaferro, Warren, Washington and Wilkes Counties in Georgia.

HIGHWAY CONSTRUCTION PROJECTS

Note: Executive Order (EO) 13658 establishes an hourly minimum wage of $10.10 for 2015 that applies to all contracts subject to the Davis-Bacon Act for which the solicitation is issued on or after January 1, 2015. If this contract is covered by the EO, the contractor must pay all workers in any classification listed on this wage determination at least $10.10 (or the applicable wage rate listed on this wage determination, if it is higher) for all hours spent performing on the contract. The EO minimum wage rate will be adjusted annually. Additional information on contractor requirements and worker protections under the EO is available at www.dol.gov/whd/govcontracts.

~~HIGHWAY CONSTRUCTION PROJECTS~~

Modification Number	Publication Date
0	1/0~~3~~2/201~~4~~5

SUGA2011-007 03/07/2011

			Rates	Fringes
	CARPENTER	$	11.45	
	CEMENT MASON/CONCRETE FINISHER	$	11.36	
LABORER:				
	ASPHALT RAKER	$	11.00	
	ASPHALT SCREED PERSON	$	10.50	
	COMMON OR GENERAL	$	8.93	
	FORM SETTER	$	10.35	
	GUARDRAIL ERECTOR	$	13.50	
	MILLING MACHINE GROUND PERSON	$	10.00	
	PIPE LAYER	$	10.20	
POWER EQUIPMENT OPERATOR:				
	ASPHALT DISTRIBUTOR	$	14.10	
	ASPHALT PAVER/SPREADER	$	12.00	
	BACKHOE/EXCAVATOR	$	10.80	

	BULLDOZER	$	11.60
	COMPACTOR	$	10.00
	CRANE/DRAGLINE	$	17.50
	FRONT END LOADER	$	10.70
	MATERIAL TRANSFER VEHICLE (SHUTTLE BUGGY)	$	11.30
	MECHANIC	$	12.75
	MILLING MACHINE	$	11.50
	MOTORGRADER FINE GRADE	$	14.55
	MOTORGRADER/BLADE	$	16.00
	ROLLER	$	10.00
	WATER TRUCK	$	11.25
TRUCK DRIVER:			
	26,000 GVW & UNDER	$	10.79
	26,00~~0~~1 GVW & OVER	$	12.75

WELDERS - Receive rate prescribed for craft performing operation to which welding is incidental.

General Decision Number: GA1~~4~~50008 01/0~~3~~2/201~~4~~5 GA8

Superseded General Decision Number: GA201~~3~~40008

State: Georgia

Construction Type: Highway

Counties: Chattahoochee, Clay, Crisp, Dooly, Harris, Macon, Marion, Muscogee, Quitman, Randolph, Schley, Stewart, Sumter, Talbot, Taylor and Webster Counties in Georgia.

HIGHWAY CONSTRUCTION PROJECTS

Note: Executive Order (EO) 13658 establishes an hourly minimum wage of $10.10 for 2015 that applies to all contracts subject to the Davis-Bacon Act for which the solicitation is issued on or after January 1, 2015. If this contract is covered by the EO, the contractor must pay all workers in any classification listed on this wage determination at least $10.10 (or the applicable wage rate listed on this wage determination, if it is higher) for all hours spent performing on the contract. The EO minimum wage rate will be adjusted annually. Additional information on contractor requirements and worker protections under the EO is available at www.dol.gov/whd/govcontracts.

~~HIGHWAY CONSTRUCTION PROJECTS~~

Modification Number	Publication Date
0	1/0~~3~~2/201~~4~~5

SUGA2011-008 03/07/2011

			Rates	Fringes
	CARPENTER	$	11.45	
	CEMENT MASON/CONCRETE FINISHER	$	11.34	
LABORER:				
	ASPHALT RAKER	$	11.00	
	ASPHALT SCREED PERSON	$	10.50	
	COMMON OR GENERAL	$	9.04	
	FORM SETTER	$	10.35	
	GRADE CHECKER	$	9.50	
	GUARDRAIL ERECTOR	$	13.50	
	MILLING MACHINE GROUND PERSON	$	10.00	
	PIPE LAYER	$	9.97	
	SIGN INSTALLER/ERECTOR	$	11.00	
	TRAFFIC CONTROL BARRICADE FLAGGER	$	9.11	
POWER				

EQUIPMENT OPERATOR:			
	ARTICULATING TRUCK/YUKE	$	11.10
	ASPHALT DISTRIBUTOR	$	14.10
	ASPHALT PAVER/SPREADER	$	12.00
	BACKHOE/EXCAVATOR	$	10.80
	BROOM	$	10.73
	BULLDOZER	$	11.60
	COMPACTOR	$	9.54
	CONCRETE CURB MACHINE	$	13.97
	FRONT END LOADER	$	10.70
	MATERIAL TRANSFER VEHICLE (SHUTTLE BUGGY)	$	11.30
	MECHANIC	$	10.43
	MILLING MACHINE	$	11.80
	MOTORGRADER FINE GRADE	$	14.55
	MOTORGRADER/BLADE	$	9.50
	ROLLER	$	10.00
	SCRAPER-PAN	$	13.48
	WATER TRUCK	$	11.25
TRUCK DRIVER:			
	26,000 GVW & UNDER	$	10.76
	26,00~~0~~1 GVW & OVER	$	10.83

WELDERS - Receive rate prescribed for craft performing operation to which welding is incidental.

General Decision Number: GA1~~4~~50009 01/0~~3~~2/201~~4~~5 GA9

Superseded General Decision Number: GA201~~3~~40009

State: Georgia

Construction Type: Highway

Counties: Appling, Bleckley, Candler, Dodge, Emanuel, Evans, Jeff Davis, Johnson, Laurens, Montgomery, Tattnall, Telfair, Toombs, Treutlen, Wayne, Wheeler and Wilcox Counties in Georgia.

HIGHWAY CONSTRUCTION PROJECTS

Note: Executive Order (EO) 13658 establishes an hourly minimum wage of $10.10 for 2015 that applies to all contracts subject to the Davis-Bacon Act for which the solicitation is issued on or after January 1, 2015. If this contract is covered by the EO, the contractor must pay all workers in any classification listed on this wage determination at least $10.10 (or the applicable wage rate listed on this wage determination, if it is higher) for all hours spent performing on the contract. The EO minimum wage rate will be adjusted annually. Additional information on contractor requirements and worker protections under the EO is available at www.dol.gov/whd/govcontracts.

~~HIGHWAY CONSTRUCTION PROJECTS~~

Modification Number	Publication Date
0	1/0~~3~~2/201~~4~~5

SUGA2011-009 03/07/2011

			Rates	Fringes
	CEMENT MASON/CONCRETE FINISHER	$	11.50	
LABORER:				
	ASPHALT RAKER	$	11.00	
	ASPHALT SCREED PERSON	$	10.50	
	COMMON OR GENERAL	$	9.00	
	FORM SETTER	$	10.35	
	GUARDRAIL ERECTOR	$	13.50	
	MILLING MACHINE GROUND PERSON	$	10.00	
	TRAFFIC CONTROL BARRICADE FLAGGER	$	9.50	
POWER EQUIPMENT OPERATOR:				
	ASPHALT DISTRIBUTOR	$	14.10	

	ASPHALT PAVER/SPREADER	$	12.00
	BACKHOE/EXCAVATOR	$	10.80
	BULLDOZER	$	11.60
	COMPACTOR	$	10.00
	CRANE/DRAGLINE	$	17.50
	FRONT END LOADER	$	10.70
	MECHANIC	$	15.86
	MILLING MACHINE	$	12.26
	MOTORGRADER FINE GRADE	$	14.55
	MOTORGRADER/BLADE	$	14.00
	ROLLER	$	10.00
	WATER TRUCK	$	11.25
TRUCK DRIVER:			
	26,000 GVW & UNDER	$	10.79
	26,00~~0~~1 GVW & OVER	$	11.37

WELDERS - Receive rate prescribed for craft performing operation to which welding is incidental.

General Decision Number: GA1~~4~~50010 01/0~~3~~2/201~~4~~5 GA10

Superseded General Decision Number: GA201~~3~~40010

State: Georgia

Construction Type: Highway

Counties: Bryan, Bulloch, Camden, Chatham, Effingham, Glynn, Liberty, Long, ~~Mcintosh~~McIntosh, and Screven Counties in Georgia.

HIGHWAY CONSTRUCTION PROJECTS

Note: Executive Order (EO) 13658 establishes an hourly minimum wage of $10.10 for 2015 that applies to all contracts subject to the Davis-Bacon Act for which the solicitation is issued on or after January 1, 2015. If this contract is covered by the EO, the contractor must pay all workers in any classification listed on this wage determination at least $10.10 (or the applicable wage rate listed on this wage determination, if it is higher) for all hours spent performing on the contract. The EO minimum wage rate will be adjusted annually. Additional information on contractor requirements and worker protections under the EO is available at www.dol.gov/whd/govcontracts.

~~HIGHWAY CONSTRUCTION PROJECTS~~

Modification Number	Publication Date
0	1/0~~3~~2/201~~4~~5

SUGA2011-010 03/07/2011

			Rates	Fringes
CARPENTER:	~~CARPENTER:~~			
	FORM BUILDER ONLY (WOOD)	$	9.21	
	CEMENT MASON/CONCRETE FINISHER	$	10.98	
LABORER:				
	ASPHALT RAKER	$	9.55	
	COMMON OR GENERAL	$	9.21	
	GUARDRAIL ERECTOR	$	13.50	
	PIPE LAYER	$	9.36	
POWER EQUIPMENT OPERATOR:				
	ASPHALT DISTRIBUTOR	$	15.09	
	ASPHALT PAVER/SPREADER	$	11.29	
	BACKHOE/EXCAVATOR	$	13.14	

	BULLDOZER	$	12.69
	COMPACTOR	$	11.00
	CRANE/DRAGLINE	$	15.00
	FRONT END LOADER	$	10.00
	MECHANIC	$	12.57
	MOTORGRADER FINE GRADE	$	14.12
	ROLLER	$	9.39
	WATER TRUCK	$	11.17
TRUCK DRIVER:			
	26,000 GVW & UNDER	$	9.60
	26,00~~0~~1 GVW & OVER	$	13.72

WELDERS - Receive rate prescribed for craft performing operation to which welding is incidental.

General Decision Number: GA1~~4~~50011 01/0~~3~~2/201~~4~~5 GA11

Superseded General Decision Number: GA201~~3~~40011

State: Georgia

Construction Type: Highway

Counties: Baker, Calhoun, Colquitt, Decatur, Dougherty, Early, Grady, Lee, Miller, Mitchell, Seminole, Terrell, Thomas and Worth Counties in Georgia.

HIGHWAY CONSTRUCTION PROJECTS

Note: Executive Order (EO) 13658 establishes an hourly minimum wage of $10.10 for 2015 that applies to all contracts subject to the Davis-Bacon Act for which the solicitation is issued on or after January 1, 2015. If this contract is covered by the EO, the contractor must pay all workers in any classification listed on this wage determination at least $10.10 (or the applicable wage rate listed on this wage determination, if it is higher) for all hours spent performing on the contract. The EO minimum wage rate will be adjusted annually. Additional information on contractor requirements and worker protections under the EO is available at www.dol.gov/whd/govcontracts.

~~HIGHWAY CONSTRUCTION PROJECTS~~

Modification Number	Publication Date
0	1/0~~3~~2/201~~4~~5

SUGA2011-011 03/07/2011

			Rates	Fringes
	CEMENT MASON/CONCRETE FINISHER	$	10.98	
LABORER:				
	ASPHALT RAKER	$	12.83	
	ASPHALT SCREED PERSON	$	9.00	
	COMMON OR GENERAL	$	8.72	
	GRADE CHECKER	$	8.72	
	GUARDRAIL ERECTOR	$	13.50	
	PIPE LAYER	$	8.72	
	SIGN INSTALLER/ERECTOR	$	11.00	
POWER EQUIPMENT OPERATOR:				
	ASPHALT DISTRIBUTOR	$	14.55	
	ASPHALT PAVER/SPREADER	$	12.40	
	BACKHOE/EXCAVATOR	$	10.50	

	BROOM	$	10.68
	BULLDOZER	$	9.50
	FRONT END LOADER	$	10.00
	MECHANIC	$	8.96
	MILLING MACHINE	$	12.50
	MOTORGRADER FINE GRADE	$	18.75
	MOTORGRADER/BLADE	$	9.50
	ROLLER	$	10.20
	SCRAPER-PAN	$	9.30
	WATER TRUCK	$	11.25
TRUCK DRIVER:			
	26,00~~0~~1 GVW & OVER	$	10.46

WELDERS - Receive rate prescribed for craft performing operation to which welding is incidental.

General Decision Number: GA1~~4~~50012 01/0~~3~~2/201~~4~~5 GA12

Superseded General Decision Number: GA201~~3~~40012

State: Georgia

Construction Type: Highway

Counties: Atkinson, Bacon, Ben Hill, Berrien, Brantley, Brooks, Charlton, Clinch, Coffee, Cook, Echols, Irwin, Lanier, Lowndes, Pierce, Tift, Turner and Ware Counties in Georgia.

HIGHWAY CONSTRUCTION PROJECTS

Note: Executive Order (EO) 13658 establishes an hourly minimum wage of $10.10 for 2015 that applies to all contracts subject to the Davis-Bacon Act for which the solicitation is issued on or after January 1, 2015. If this contract is covered by the EO, the contractor must pay all workers in any classification listed on this wage determination at least $10.10 (or the applicable wage rate listed on this wage determination, if it is higher) for all hours spent performing on the contract. The EO minimum wage rate will be adjusted annually. Additional information on contractor requirements and worker protections under the EO is available at www.dol.gov/whd/govcontracts.

~~HIGHWAY CONSTRUCTION PROJECTS~~

Modification Number	Publication Date
0	1/0~~3~~2/201~~4~~5

SUGA2011-012 03/07/2011

			Rates	Fringes
	CEMENT MASON/CONCRETE FINISHER	$	10.98	
LABORER:				
	ASPHALT SCREED PERSON	$	9.00	
	COMMON OR GENERAL	$	8.52	
	GRADE CHECKER	$	9.90	
	GUARDRAIL ERECTOR	$	13.50	
	PIPE LAYER	$	8.52	
	SIGN INSTALLER/ERECTOR	$	11.00	
	TRAFFIC CONTROL BARRICADE FLASHER	$	9.35	
POWER EQUIPMENT OPERATOR:				
	ASPHALT DISTRIBUTOR	$	13.00	

	ASPHALT PAVER/SPREADER	$	11.75
	BACKHOE/EXCAVATOR	$	10.50
	BROOM	$	10.68
	BULLDOZER	$	9.50
	FRONT END LOADER	$	10.00
	MECHANIC	$	9.26
	MILLING MACHINE	$	12.50
	MOTORGRADER FINE GRADE	$	17.95
	MOTORGRADER/BLADE	$	9.50
	ROLLER	$	9.90
	SCRAPER-PAN	$	9.30
	WATER TRUCK	$	11.25
TRUCK DRIVER:			
	26,00~~0~~1 GVW & OVER	$	10.35

WELDERS - Receive rate prescribed for craft performing operation to which welding is incidental.

==========

~~Unlisted classifications needed for work not included within the scope of the classifications listed may be added after award only as provided in the labor standards contract clauses (29 CFR 5.5(a)(1)(ii)).~~

~~----------~~

~~The body of each wage determination lists the classification and wage rates that have been found to be prevailing for the cited type(s) of construction in the area covered by the wage determination. The classifications are listed in alphabetical order of "identifiers" that indicate whether the particular rate is union or non-union.~~

~~Union Identifiers~~

~~An identifier enclosed in dotted lines beginning with characters other than "SU" denotes that the union classification and rate have found to be prevailing for that classification. Example: PLUM0198-005 07/01/2011. The first four letters , PLUM, indicate the international union and the four-digit number, 0198, that follows indicates the local union number or district council number where applicable, i.e., Plumbers Local 0198. The next number, 005 in the example, is an internal number used in processing the wage determination. The date, 07/01/2011, following these characters is the effective date of the most current negotiated rate/collective bargaining agreement which would be July 1, 2011 in the above example.~~

~~Union prevailing wage rates will be updated to reflect any changes in the collective bargaining agreements governing the rate.~~

~~Non-Union Identifiers~~

~~Classifications listed under an "SU" identifier were derived from survey data by computing average rates and are not union rates; however, the data used in computing these rates may include both union and non-union data. Example: SULA2004-007 5/13/2010. SU indicates the rates are not union rates, LA indicates the State of Louisiana; 2004 is the year of the survey; and 007 is an internal number used in producing the wage determination. A 1993 or later date, 5/13/2010, indicates the classifications and rates under that identifier were issued as a General Wage Determination on that date.~~

~~Survey wage rates will remain in effect and will not change until a new survey is conducted.~~

~~----------~~

~~WAGE DETERMINATION APPEALS PROCESS~~

~~1.) Has there been an initial decision in the matter? This can be:~~

~~* an existing published wage determination~~
~~* a survey underlying a wage determination~~
~~* a Wage and Hour Division letter setting forth a position on a wage determination matter~~
~~* a conformance (additional classification and rate) ruling~~

~~On survey related matters, initial contact, including requests for summaries of surveys, should be with the Wage and Hour Regional Office for the area in which the survey was conducted because those Regional Offices have responsibility for the Davis-Bacon survey program. If the response from this initial contact is not satisfactory, then the process described in 2.) and 3.) should be followed.~~

~~With regard to any other matter not yet ripe for the formal process described here, initial contact should be with the Branch of Construction Wage Determinations. Write to:~~

~~Branch of Construction Wage Determinations~~
~~Wage and Hour Division~~
~~U.S. Department of Labor~~
~~200 Constitution Avenue, N.W.~~
~~Washington, DC 20210~~

~~2.) If the answer to the question in 1.) is yes, then an interested party (those affected by the action) can request review and reconsideration from the Wage and Hour Administrator (See 29 CFR Part 1.8 and 29 CFR Part 7). Write to:~~

~~Wage and Hour Administrator~~
~~U.S. Department of Labor~~
~~200 Constitution Avenue, N.W.~~
~~Washington, DC 20210~~

~~The request should be accompanied by a full statement of the interested party's position and by any information (wage payment data, project description, area practice material, etc.) that the requestor considers relevant to the issue.~~

~~3.) If the decision of the Administrator is not favorable, an interested party may appeal directly to the Administrative Review Board (formerly the Wage Appeals Board). Write to:~~

~~Administrative Review Board~~
~~U.S. Department of Labor~~
~~200 Constitution Avenue, N.W.~~
~~Washington, DC 20210~~

~~4.) All decisions by the Administrative Review Board are final.~~

~~END OF GENERAL DECISION~~

Unlisted classifications needed for work not included within the scope of the classifications listed may be added after award only as provided in the labor standards contract clauses (29CFR 5.5 (a) (1) (ii)).

The body of each wage determination lists the classification and wage rates that have been found to be prevailing for the cited type(s) of construction in the area covered by the wage determination. The classifications are listed in alphabetical order of "identifiers" that indicate whether the particular rate is a union rate (current union negotiated rate for local), a survey rate (weighted average rate) or a union average rate (weighted union average rate).

Union Rate Identifiers

A four letter classification abbreviation identifier enclosed in dotted lines beginning with characters other than "SU" or "UAVG" denotes that the union classification and rate were prevailing for that classification in the survey. Example: PLUM0198-005 07/01/2014. PLUM is an abbreviation identifier of the union which prevailed in the survey for this classification, which in this example would be Plumbers. 0198 indicates the local union number or district council number where applicable, i.e., Plumbers Local 0198. The next number, 005 in the example, is an internal number used in processing the wage determination. 07/01/2014 is the effective date of the most current negotiated rate, which in this example is July 1, 2014.

Union prevailing wage rates are updated to reflect all rate changes in the collective bargaining agreement (CBA) governing this classification and rate.

Survey Rate Identifiers

Classifications listed under the "SU" identifier indicate that no one rate prevailed for this classification in the survey and the published rate is derived by computing a weighted average rate based on all the rates reported in the survey for that classification. As this weighted average rate includes all rates reported in the survey, it may include both union and non-union rates. Example: SULA2012-007 5/13/2014. SU indicates the rates are survey rates based on a weighted average calculation of rates and are not majority rates. LA indicates the State of Louisiana. 2012 is the year of survey on which these classifications and rates are based. The next number, 007 in the example, is an internal number used in producing the wage

determination. 5/13/2014 indicates the survey completion date for the classifications and rates under that identifier.

Survey wage rates are not updated and remain in effect until a new survey is conducted.

Union Average Rate Identifiers

Classification(s) listed under the UAVG identifier indicate that no single majority rate prevailed for those classifications; however, 100% of the data reported for the classifications was union data. EXAMPLE: UAVG-OH-0010 08/29/2014. UAVG indicates that the rate is a weighted union average rate. OH indicates the state. The next number, 0010 in the example, is an internal number used in producing the wage determination. 08/29/2014 indicates the survey completion date for the classifications and rates under that identifier.

A UAVG rate will be updated once a year, usually in January of each year, to reflect a weighted average of the current negotiated/CBA rate of the union locals from which the rate is based.

WAGE DETERMINATION APPEALS PROCESS

1.) Has there been an initial decision in the matter? This can be:

* an existing published wage determination
* a survey underlying a wage determination
* a Wage and Hour Division letter setting forth a position on a wage determination matter
* a conformance (additional classification and rate) ruling

On survey related matters, initial contact, including requests for summaries of surveys, should be with the Wage and Hour Regional Office for the area in which the survey was conducted because those Regional Offices have responsibility for the Davis-Bacon survey program. If the response from this initial contact is not satisfactory, then the process described in 2.) and 3.) should be followed.

With regard to any other matter not yet ripe for the formal process described here, initial contact should be with the Branch of Construction Wage Determinations. Write to:

Branch of Construction Wage Determinations
Wage and Hour Division
U.S. Department of Labor
200 Constitution Avenue, N.W.
Washington, DC 20210

2.) If the answer to the question in 1.) is yes, then an interested party (those affected by the action) can request review and reconsideration from the Wage and Hour Administrator (See 29 CFR Part 1.8 and 29 CFR Part 7). Write to:

Wage and Hour Administrator
U.S. Department of Labor
200 Constitution Avenue, N.W.
Washington, DC 20210

The request should be accompanied by a full statement of the interested party's position and by any information (wage payment data, project description, area practice material, etc.) that the requestor considers relevant to the issue.

3.) If the decision of the Administrator is not favorable, an interested party may appeal directly to the Administrative Review Board (formerly the Wage Appeals Board). Write to:

Administrative Review Board
U.S. Department of Labor
200 Constitution Avenue, N.W.
Washington, DC 20210

4.) All decisions by the Administrative Review Board are final.

END OF GENERAL DECISION

ATTACHMENT 5 TO EXHIBIT 8

STANDARD FEDERAL EQUAL EMPLOYMENT OPPORTUNITY CONSTRUCTION CONTRACT SPECIFICATIONS (EXECUTIVE ORDER 11246) (43 FR 14895)

1. As used in these specifications:

a. "Covered area" means the geographical area described in the solicitation from which this contract resulted;

b. "Director" means Director, Office of Federal Contract Compliance Programs, United States Department of Labor, or any person to whom the Director delegates authority;

c. "Employer identification number" means the Federal Social Security number used on the Employer's Quarterly Federal Tax Return, U.S. Treasury Department Form 941.

d. "Minority" includes:

(i) Black (all persons having origins in any of the Black African racial groups not of Hispanic origin);

(ii) Hispanic (all persons of Mexican, Puerto Rican, Cuban, Central or South American or other Spanish Culture or origin, regardless of race);

(iii) Asian and Pacific Islander (all persons having origins in any of the original peoples of the Far East, Southeast Asia, the Indian Subcontinent, or the Pacific Islands); and

(iv) American Indian or Alaskan Native (all persons having origins in any of the original peoples of North America and maintaining identifiable tribal affiliations through membership and participation or community identification).

2. Whenever the Contractor, or any Subcontractor at any tier, subcontracts a portion of the work involving any construction trade, it shall physically include in each subcontract in excess of $10,000 the provisions of these specifications and the Notice which contains the applicable goals for minority and female participation and which is set forth in the solicitations from which this contract resulted.

3. If the Contractor is participating (pursuant to 41 CFR 60–4.5) in a Hometown Plan approved by the U.S. Department of Labor in the covered area either individually or through an association, its affirmative action obligations on all work in the Plan area (including goals and timetables) shall be in accordance with that Plan for those trades which have unions participating in the Plan. Contractors must be able to demonstrate their participation in and compliance with the provisions of any such Hometown Plan. Each Contractor or Subcontractor participating in an approved Plan is individually required to comply with its obligations under the EEO clause, and to make a good faith effort to achieve each goal under the Plan in each trade in which it has employees. The overall good faith performance by other Contractors or Subcontractors toward a goal in an approved Plan does not excuse any covered Contractor's or Subcontractor's failure to take good faith efforts to achieve the Plan goals and timetables.

4. The Contractor shall implement the specific affirmative action standards provided in paragraphs 7a through p of these specifications. The goals set forth in the solicitation from which this contract resulted are expressed as percentages of the total hours of employment and training of minority and female utilization the Contractor should reasonably be able to achieve in each construction trade in which it has employees in the covered area. Covered Construction contractors performing construction work in geographical areas where they do not have a Federal or federally assisted construction contract shall apply the minority and female goals established for the geographical area where the work is being performed. Goals are published periodically in the Federal Register in notice form, and such notices may be obtained from any Office of Federal Contract Compliance Programs office or from Federal procurement contracting officers. The Contractor is expected to make substantially uniform progress in meeting its goals in each craft during the period specified.

5. Neither the provisions of any collective bargaining agreement, nor the failure by a union with whom the Contractor has a collective bargaining agreement, to refer either minorities or women shall excuse the Contractor's obligations under these specifications, Executive Order 11246, or the regulations promulgated pursuant thereto.

6. In order for the nonworking training hours of apprentices and trainees to be counted in meeting the goals, such apprentices and trainees must be employed by the Contractor during the training period, and the Contractor must have made a commitment to employ the apprentices and trainees at the completion of their training, subject to the availability of employment opportunities. Trainees must be trained pursuant to training programs approved by the U.S. Department of Labor.

7. The Contractor shall take specific affirmative actions to ensure equal employment opportunity. The evaluation of the Contractor's compliance with these specifications shall be based upon its effort to achieve maximum results from its actions. The Contractor shall document these efforts fully, and shall implement affirmative action steps at least as extensive as the following:

a. Ensure and maintain a working environment free of harassment, intimidation, and coercion at all sites, and in all facilities at which the Contractor's employees are assigned to work. The Contractor, where possible, will assign two or more women to each construction project. The Contractor shall specifically ensure that all foremen, superintendents, and other on-site supervisory personnel are aware of and carry out the Contractor's obligation to maintain such a working environment, with specific attention to minority or female individuals working at such sites or in such facilities.

b. Establish and maintain a current list of minority and female recruitment sources, provide written notification to minorities and female recruitment sources and to community organizations when the Contractor or its unions have employment opportunities available, and maintain a record of the organizations' responses.

c. Maintain a current file of the names, addresses and telephone numbers of each minority and female off-the-street applicant and minority or female referral from a union, a recruitment source or community organization and of what action was taken with respect to each such individual. If such individual was sent to the union hiring hall for referral and was not referred back to the Contractor by the union or, if referred, not employed by the Contractor, this

shall be documented in the file with the reason therefor, along with whatever additional actions the Contractor may have taken.

d. Provide immediate written notification to the Director when the union or unions with which the Contractor has a collective bargaining agreement has not referred to the Contractor a minority person or woman sent by the Contractor, or when the Contractor has other information that the union referral process has impeded the Contractor's efforts to meet its obligations.

e. Develop on-the-job training opportunities and/or participate in training programs for the area which expressly include minority and women, including upgrading programs and apprenticeship and trainee programs relevant to the Contractor's employment needs, especially those programs funded or approved by the Department of Labor. The Contractor shall provide notice of these programs to the sources compiled under 7b above.

f. Disseminate the Contractor's EEO policy by providing notice of the policy to unions and training programs and requesting their cooperation in assisting the Contractor in meeting its EEO obligations; by including it in any policy manual and collective bargaining agreement; by publicizing it in the company newspaper, annual report, etc.; by specific review of the policy with all management personnel and with all minority and female employees at least once a year and by posting the company EEO policy on bulletin boards accessible to all employees at each location where construction work is performed.

g. Review, at least annually, the company's EEO policy and affirmative action obligations under these specifications with all employees having any responsibility for hiring, assignment, layoff, termination or other employment decisions including specific review of these items with onsite supervisory personnel such as Superintendents, General Foremen, etc., prior to the initiation of construction work at any job site. A written record shall be made and maintained identifying the time and place of these meetings, persons attending, subject matter discussed, and disposition of the subject matter.

h. Disseminate the Contractor's EEO policy externally by including it in any advertising in the news media, specifically including minority and female news media, and providing written notification to and discussing the Contractor's EEO policy with other Contractors and Subcontractors with whom the Contractor does or anticipates doing business.

i. Direct its recruitment efforts, both oral and written, to minority, female and community organizations, to schools with minority and female students and to minority and female recruitment and training organizations serving the Contractor's recruitment area and employment needs. Not later than one month prior to the date for the acceptance of applications for apprenticeship or other training by any recruitment source, the Contractor shall send written notification to organizations such as the above, describing the-openings, screening procedures, and tests to be used in the selection process.

j. Encourage present minority and female employees to recruit other minority persons and women and, where reasonable, provide after school, summer and vacation employment to minority and female youth both on the site and in other areas of a Contractor's work force.

k. Validate all tests and other selection requirements where there is an obligation to do so under 41 CFR Part 60-3.

l. Conduct, at least annually, an inventory and evaluation at least of all minority and female personnel for promotional opportunities and encourage these employees to seek or to prepare for, through appropriate training, etc. such opportunities.

m. Ensure that seniority practices, job classifications, work assignments and other personnel practices, do not have a discriminatory effect by continually monitoring all personnel and employment related activities to ensure that the EEO policy and the Contractor's obligations under these specifications are being carried out.

n. Ensure that all facilities and company activities are nonsegregated except that separate or single-user toilet and necessary changing facilities shall be provided to assure privacy between the sexes.

o. Document and maintain a record of all solicitations of offers for subcontracts from minority and female construction contractors and suppliers, including circulation of solicitations to minority and female contractor associations and other business associations.

p. Conduct a review, at least annually of all supervisors' adherence to and performance under the Contractor's EEO policies and affirmative action obligations.

8. Contractors are encouraged to participate in voluntary associations which assist in fulfilling one or more of their affirmative action obligations (7a through p). The efforts of a contractor association, joint contractor-union, contractor-community, or other similar group of which the contractor is a member and participant, may be asserted as fulfilling any one or more of its obligations under 7a through p of these Specifications provided that the contractor actively participates in the group, makes every effort to assure that the group has a positive impact on the employment of minorities and women in the industry, ensures that the concrete benefits of the program are reflected in the Contractor's minority and female workforce participation, makes a good faith effort to meet its individual goals and timetables, and can provide access to documentation which demonstrates the effectiveness of actions taken on behalf of the Contractor. The obligation to comply, however, is the Contractor's and failure of such a group to fulfill an obligation shall not be a defense for the Contractor's noncompliance.

9. A single goal for minorities and a separate single goal for women have been established. The Contractor, however, is required to provide equal employment opportunity and to take affirmative action for all minority groups, both male and female, and all women, both minority and non-minority. Consequently, the Contractor may be in violation of the Executive Order if a particular group is employed in a substantially disparate manner (for example, even though the Contractor has achieved its goals for women generally, the Contractor may be in violation of the Executive Order if a specific minority group of women is underutilized).

10. The Contractor shall not use the goals and timetables or affirmative action standards to discriminate against any person because of race, color, religion, sex, or national origin.

11. The Contractor shall not enter into any Contract or Subcontract with any person or firm debarred from Government contracts pursuant to Executive Order 11246.

12. The Contractor shall carry out such sanctions and penalties for violation of these specifications and of the Equal Opportunity Clause, including suspension, termination and cancellation of existing subcontracts as may be imposed or ordered pursuant to Executive

Order 11246, as amended, and its implementing regulations, by the Office of Federal Contract Compliance Programs. Any Contractor who fails to carry out such sanctions and penalties shall be in violation of these specifications and Executive Order 11246, as amended.

13. The Contractor, in fulfilling its obligations under these specifications, shall implement specific affirmative action steps, at least as extensive as those standards prescribed in paragraph 7 of these specifications, so as to achieve maximum results from its efforts to ensure equal employment opportunity. If the Contractor fails to comply with the requirements of the Executive Order, the implementing regulations, or these specifications, the Director shall proceed in accordance with 41 CFR 60–4.8.

14. The Contractor shall designate a responsible official to monitor all employment related activity to ensure that the company EEO policy is being carried out, to submit reports relating to the provisions hereof as may be required by the Government and to keep records. Records shall at least include for each employee the name, address, telephone numbers, construction trade, union affiliation if any, employee identification number when assigned, social security number, race, sex, status (e.g., mechanic, apprentice trainee, helper, or laborer), dates of changes in status, hours worked per week in the indicated trade, rate of pay, and locations at which the work was performed. Records shall be maintained in an easily understandable and retrievable form; however, to the degree that existing records satisfy this requirement, contractors shall not be required to maintain separate records.

15. Nothing herein provided shall be construed as a limitation upon the application of other laws which establish different standards of compliance or upon the application of requirements for the hiring of local or other area residents (e.g., those under the Public Works Employment Act of 1977 and the Community Development Block Grant Program).

ATTACHMENT 6 TO EXHIBIT 8

DISADVANTAGED BUSINESS ENTERPRISE PROGRAM
CRITERIA FOR ACCEPTABILITY

The purpose of this special provision is to establish criteria for acceptability of DBE firms for work performed on this contract. The intent is to ensure all participation counted toward fulfillment of the DBE goals is (1) real and substantial, (2) actually performed by viable, independent DBE owned firms, and (3) in accordance with the spirit of the applicable laws and regulations.

The policy of the Georgia Department of Transportation is to ensure compliance with Title VI of the Civil Rights Act of 1964, 49 Code of Federal Register, Part 26 and related statutes and regulations in all program activities.

To this end the Georgia Department of Transportation shall not discriminate on the basis of race, color, sex or national origin in the award, administration and performance of any Georgia Department of Transportation assisted contract or in the administration of its Disadvantaged Business Enterprise Program. The Georgia Department of Transportation shall take all necessary and reasonable steps to ensure nondiscrimination.

DBE payments and commitments for Federal-aid projects shall be separate and distinct and cannot be transferred or combined in any matter.

The DBE Goal specified in the contract will be a percentage representing the DBE Race Conscious Participation. The Contractor will strive to achieve an additional percentage in his/her contracts for all projects during the course of the current State Fiscal Year, in order to meet the overall Georgia Department of Transportation DBE goal.

DBE DIRECTORY: The Department has available a directory or source list to facilitate identifying DBEs with capabilities relevant to general contracting requirements and to particular solicitations. The Department will make the directory available to bidders and proposers in

their efforts to meet the DBE requirements. The directory or listing includes firms which the Department has certified to be eligible DBEs in accordance with 49 CFR Part 26.

GOAL FOR PARTICIPATION: If a percentage goal for DBE participation in this contract is set forth elsewhere in this proposal, the Contractor shall complete the DBE GOALS Form included in the proposal. The Contractor is encouraged to make every effort to achieve the goal set by the Department. However, if the Contractor cannot find sufficient DBE participants to meet the goal established by the Department, the Department will consider for award a proposal with less participation than the established goal if:

(A) The bidder can demonstrate no greater participation could be obtained. This should be well documented by demonstrating the Contractor's actions through good faith efforts. The following is a list of types of actions which the Department will consider as part of the Contractor's good faith efforts to obtain DBE participation. This is not intended to be a

mandatory checklist nor intended to be exclusive or exhaustive. Other factors or types of efforts may be relevant in appropriate cases.

(1) Soliciting through all reasonable and available means (e.g. attendance at pre-bid meetings, advertising and/or written notices) the interest of all certified DBEs who have the capability to perform the work of the contract. The Contractor must solicit this interest within sufficient time to allow the DBEs to respond to the solicitation. The Contractor must determine with certainty if the DBEs are interested by taking appropriate steps to follow up initial solicitations.

(2) Selecting portions of the work to be performed by DBEs in order to increase the likelihood the DBE goals will be achieved. This includes, where appropriate, breaking out contract work items into economically feasible units to facilitate DBE participation, even when the Contractor might otherwise prefer to perform these work items with its own forces.

(3) Providing interested DBEs with adequate information about the plans, specifications, and requirements of the contract in a timely manner to assist DBEs participants in responding to a solicitation.

(4) (a) Negotiating in good faith with interested DBEs. Contractor(s) are responsible to make a portion of the work available to DBE subcontractors and suppliers and to select those portions of the work or material needs consistent with the available DBE subcontractors and suppliers, so as to facilitate DBE participation. Evidence of such negotiation includes the names, addresses, and telephone numbers of DBEs that were considered; a description of the information provided regarding the plans and specifications for the work selected for subcontracting; and evidence as to why additional agreements could not be reached for DBEs to perform the work.

(b) Contractor(s) using good business judgment would consider a number of factors in negotiating with subcontractors, including DBE subcontractors, and would take a firm's price and capabilities as well as contract goals into consideration. However, the fact there may be some additional costs involved in finding and using DBEs is not in itself sufficient reason for a bidder's failure to meet the contract DBE goal, as long as such costs are reasonable. Also, the ability or desire of a Contractor to perform the work of a contract with its own organization does not relieve the Contractor of the responsibility to make good faith efforts. Contractors are not, however, required to accept higher quotes from DBEs if the price difference is excessive or unreasonable.

(5) Not rejecting DBEs as being unqualified without sound reasons based on a thorough investigation of their capabilities. The Contractor's standing within its industry, membership in specific groups, organizations, or associations and political or social affiliations (for example union vs. nonunion employee status) are not legitimate causes for the rejection or ~~non-solicitation~~non-solicitation of bids in the Contractor's efforts to meet the project goal.

(6) Making efforts to assist interested DBEs in obtaining bonding, lines of credit, or insurance as required by the contractor.

(7) Making efforts to assist interested DBEs in obtaining necessary equipment, supplies, materials, or related assistance or services.

(8) Effectively using the services of available minority/women community organizations; minority/women Contractors' groups; local, state, and Federal minority/women business assistance offices; and other organizations as allowed on a case-by-case basis to provide assistance in the recruitment and placement of DBE's.

(B) The participation proposed by the low bidder is not substantially less than the participation proposed by the other bidders on the same contract.

If no percentage goal is set forth in the proposal, the contractor may enter a proposed DBE participation. This voluntary DBE participation will count as race neutral DBE participation. Prime Contractor shall report race-neutral participation in accordance with the DBE Monthly Report requirements shown in this document.

To be eligible for award of this contract, All bidders will be required to submit the following information to the Department by the close of business on the 3rd working day following opening of the bid as a matter of bidder responsibility.

(1) The names and addresses of DBE firms committed to participate in the Contract;

(2) A description of the work each DBE will perform;

(3) The dollar amount of the participation of each DBE firm participating;

(4) Written documentation of the bidder's commitment to use a DBE subcontractor whose participation it submits to meet a contract goal;

(5) Written confirmation from the DBE committed to participating in the contract, as provided in the prime contractor's commitment.

(6) If the contract goal is not met, evidence of good faith efforts must be provided.

Failure by a bidder to furnish the above information may subject the bid to disqualification. Also failure by the bidder to submit satisfactory evidence of good faith efforts may subject the bid to disqualification.

Award of a contract by the Department to a Prime Contractor who has listed DBE participants with the bid may not constitute final approval by the Department of the listed DBE. The Department reserves the right to approve or disapprove a Disadvantaged firm after a review of the Disadvantaged firm's proposal participation. Payment to the Contractor under the contract may be withheld until final approval of the listed DBEs is granted by the Department.

If the Contractor desires to substitute a DBE in lieu of those listed in the proposal, a letter of concurrence shall be required from the listed DBE prior to approval of the substitution, unless this requirement is waived by the Department.

Agreements between bidder and a DBE in which promises not to provide Subcontracting quotations to other bidders are prohibited.

DEFINITION: For the purposes of this provision, the following definitions will apply: Disadvantaged Business Enterprise or DBE means a for-profit small business concern –

(1) Ensuring at least 51 percent owned by one or more individuals who are both socially and economically disadvantaged or, in the case of a corporation, in which 51 percent of the stock is owned by one or more such individuals; and

(2) Whose management and daily business operations are controlled by one or more of the socially and economically disadvantaged individuals who own the business.

Good Faith Efforts means efforts to achieve a DBE goal or other requirement of this part which, by their scope, intensity, and appropriateness to the objective, can reasonably be expected to fulfill the program requirement.

Joint Venture means an association of a DBE firm and one or more other firms to carry out a single, for-profit business enterprise, for which the parties combine their property, capital, efforts, skills and knowledge, and in which the DBE is responsible for a distinct, clearly defined portion of the work of the contract and whose share in the capital contribution, control, management, risks, and profits of the joint venture are commensurate with its ownership interest.

Socially and Economically Disadvantaged Individual means any individual who is a citizen (or lawfully admitted permanent resident) of the United States and who is –

(1) Any individual who the Department finds to be a socially and economically disadvantaged individual on a case-by-case basis.

(2) Any individual in the following groups, members of which are reputably presumed to be socially and economically disadvantaged.

(i) "Black Americans," which includes persons having origins, in any of the Black racial groups of Africa;

(ii) "Hispanic Americans," which includes persons of Mexican, Puerto Rican, Cuban, Dominican, Central or South American, or other Spanish or Portuguese culture or origin, regardless of race;

(iii) "Native Americans," which includes persons who are American Indians, Eskimos, Aleuts, or Native Hawaiians;

(iv) "Asian-Pacific Americans," which includes persons whose origins are from Japan, China, Taiwan, Korea, Burma (Myanmar), Vietnam, Laos, Cambodia (Kampuchea), Thailand, Malaysia, Indonesia, the Philippines, Brunei, Samoa, Guam, the U.S. Trust Territories of the

Pacific Islands (Republic of Palau), the Commonwealth of the Northern Marianas Islands, Macao, Fiji, Tonga, Kiribati, Juvalu, Nauru, Federated States of Micronesia, or Hong Kong;

(v) "Subcontinent Asian Americans," which includes persons whose origins are from India, Pakistan, Bangladesh, Bhutan, the Maldives Islands, Nepal or Sri Lanka;

(vi) Women;

(vii) Any additional groups whose members are designated as socially and economically disadvantaged by the SBA, at such time as the SBA designation becomes effective.

(3) GDOT will presume that such persons are socially and economically disadvantaged only to the extent permitted by applicable federal law.

Race-conscious measure is one focused specifically on assisting only DBEs, including women-owned DBEs.

Race-neutral measure is one being, or can be, used to assist all small businesses. For the purposes of this part, race-neutral includes gender-neutrality.

DISCRIMINATION PROHIBITED: No person shall be excluded from participation in, denied the benefits of, or otherwise discriminated against in connection with the award and performance of this contract on the grounds of race, color, sex or national origin.

The following assurance becomes a part of this contract and must be included in and made a part of each subcontract the prime contractor enters into with their subcontractors (49 CFR 26.13):

> "The contractor, and/or subcontractor shall not discriminate on the basis of race, color, national origin, or sex in the performance of this contract. The contractor shall carry out applicable requirements of 49 CFR Part 26 in the award and administration of DOT – assisted contracts. Failure by the contractor to carry out these requirements is (breach) of this contract which may result in the termination of this contract or such other remedy as the Department deems appropriate.

Failure to Achieve Requirements: Periodic reviews shall be made by the Department to determine the extent of compliance with the requirements set forth in this provision. If the Contractor is found to be in noncompliance, further payments for any work performed may be withheld until corrective action is taken. If corrective action is not taken, it may result in termination of this contract.

Participation will be counted toward fulfillment of the DBE goal as follows:

(A) When a DBE participates in a contract, the Contractor counts only the value of the work actually performed by the DBE toward DBE goals.

(1) Count the entire amount of the portion of a ~~constructioncontract~~construction contract (or other contract not covered by paragraph (A) (2) of this section) performed by the DBE's own forces. Include the cost of supplies and materials obtained by the DBE for the work of the contract, including supplies purchased or equipment leased by the DBE (except supplies and equipment the DBE subcontractor purchases or leases from the prime contractor or its affiliate).

(2) Count the entire amount of fees or commissions charged by a DBE firm for providing a bona fide service, such as professional, technical consultant, or managerial services, or for providing bonds or insurance specifically required for the performance of a DOT-assisted contract, toward DBE goals, provided the Department determines the fee is reasonable and not excessive as compared with fees customarily allowed for similar services.

(3) When a DBE subcontracts part of the work of its contract to another firm, the value of the subcontracted work may be counted toward DBE goals only if the DBE's subcontractor is itself a DBE. Work that a DBE subcontracts to a non-DBE firm does not count toward DBE goals.

(B) When a DBE performs as a participant in a joint venture, count a portion of the total dollar value of the contract equal to the distinct, clearly defined portion of the work of the contract the DBE performs with own forces toward DBE goals.

(C) Count expenditures to a DBE contractor toward DBE goals only if the DBE is performing a commercially useful function on that contract.

(1) A DBE performs a commercially useful function when responsible for execution of the work of the contract and carrying out responsibilities by actually performing, managing, and supervising the work involved. To perform a commercially useful function, the DBE must also be responsible, with respect to materials and supplies used on the contract, for negotiating price, determining quality and quantity, ordering the material, and installing (where applicable) and paying for the material itself.

(2) A DBE does not perform a commercially useful function if their role is limited to being an extra participant in a transaction, contract, or project through which funds are passed in order to obtain the appearance of DBE participation.

(3) If a DBE does not perform or exercise responsibility for at least 30 percent of the total cost of their contract with their own work force, or the DBE subcontracts a greater portion of the work of a contract than would be expected on the basis of normal industry practice for the type of work involved, the Department will presume the DBE is not performing a commercially useful function.

(4) When a DBE is presumed not to be performing a commercially useful function as provided in paragraph (C) (3) of this section, the DBE may present evidence to rebut this presumption.

(5) The Department's decisions on commercially useful function matters are subject to review by the US DOT, but are administratively appealable to the US DOT.

(D) The following factors are to be used in determining whether a DBE trucking company is performing a commercially useful function:

(1) The DBE must be responsible for the management and supervision of the entire trucking operation for which they are responsible on a particular contract, and there cannot be a contrived arrangement for the purpose of meeting DBE goals.

(2) The DBE must itself own and operate at least one fully licensed, insured, and operational truck used on the contract.

(3) The DBE receives credit for the total value of the transportation services it provides on the contract using trucks it owns, insures, and operates using drivers it employs.

(4) The DBE may lease trucks from another DBE firm, including an owner/operator who is certified as a DBE. The DBE who leases trucks from another DBE receives credit for the total value of the transportation services the lessee DBE provided on the contract.

(5) The DBE may also lease trucks from a non-DBE and is entitled to credit only for the fee or commission it receives as a result of the lease arrangement. The DBE does not receive credit for the total value of the transportation services provided by the lessee, since these services are not provided by a DBE.

(6) For purposes of this paragraph (D), a lease must indicate the DBE has exclusive use of and control over the truck. This does not preclude the leased truck from working for others during the term of the lease with the consent of the DBE, so long as the lease gives the DBE absolute priority for use of the leased truck. Leased trucks must display the name and identification number of the DBE.

(E) Count expenditures with DBEs for materials or supplies toward DBE goals as provided in the following:

(1) (i) If the materials or supplies are obtained from a DBE manufacturer, count 100 percent of the cost of the materials or supplies toward DBE goals.

(ii) For purposes of this paragraph, a manufacturer is a firm that operates or maintains a factory or establishment that ~~produces,on~~produces, on the premises, the materials, supplies, articles, or equipment required under the contract and of the general character described by the specifications.

(2) (i) If the materials or supplies are obtained from a DBE regular dealer, count 60 percent of the cost of the materials or supplies toward DBE goals.

(ii) For purposes of this section, a regular dealer is a firm owning, operating, or maintaining a store, warehouse, or other establishment in which the materials, supplies, articles or equipment of the general character described by the specifications and required under the contract are bought, kept in stock, and regularly sold or leased to the public in the usual course of business.

(A) To be a regular dealer, the firm must be an established, regular business engaging, as its principal business and under its own name, in the purchase and sale or lease of the products in question.

(B) A person may be a regular dealer in such bulk items as petroleum products, steel, cement, gravel, stone, or asphalt without owning, operating, or maintaining a place of business as provided in this paragraph (E)(2)(ii) if the person both owns and operates distribution equipment for the products. Any supplementing of regular dealers' own distribution equipment shall be by a long-term lease agreement and not on an ad hoc or contract-by-contract basis.

(C) Packagers, brokers, manufacturers' representatives, or other persons who arrange or expedite transactions are not regular dealers within the meaning of this paragraph (E)(2).

(3) With respect to materials or supplies purchased from a DBE which is neither a manufacturer nor a regular dealer, count the entire amount of fees or commissions charged for assistance in the procurement of the materials and supplies, or fees or transportation charges for the delivery of materials or supplies required on a job site, toward DBE goals, provided you determine the fees to be reasonable and not excessive as compared with fees customarily allowed for similar services. Do not count any portion of the cost of the materials and supplies themselves toward DBE goals, however.

(4) Do not count the participation of a DBE subcontractor toward the prime contractor's DBE achievements until the amount being counted toward the goal has been paid to the DBE.

(5) No participation will be counted not in compliance with Special Provision entitled "Criteria for Acceptability" which is a part of this contract or with any provisions included in 49 CFR Part 26.

(6) If the contract amount overruns, the contractor will not be required to increase the dollar amount of DBE participation. If the contract amount under runs, the contractor will not be allowed to under run the dollar amount of DBE participation except when the DBE subcontracted items themselves under run.

REPORTS

A: The contractor shall submit a "DBE Participation Report" on this contract monthly which shall include the following:

1. The name of each DBE participating in the contract.

2. A description of the work to be performed, materials, supplies, and services provided by each DBE.

3. Whether each DBE is a supplier, subcontractor, owner/operator, or other.

4. The dollar value of each DBE subcontract or supply agreement.

5. The actual payment to date of each DBE participating in the contract.

6. The report shall be updated by the Prime Contractor whenever the approved DBE has performed a portion of the work that has been designated for the contract. Copies of this report should be transmitted promptly to the Engineer. Failure to submit the report within 30 calendar days following the end of the month may cause payment to the contractor to be withheld.

7. The Prime Contractor shall notify the Project Engineer at least 24 hours prior to the time the DBE commences working on the project. The DBE must furnish supervision of the DBE portion of the work, and the person responsible for this supervision must report to the Project Engineer when they begin work on the project. They must also inform the Project Engineer when their forces will be doing work on the project.

B. In order to comply with 49 CFR 26.11, the Prime Contractor shall submit documentation regarding all payments made from the Prime to all DBE subcontractors on federal aid projects in the form of copies of cancelled checks or notarized electronic documentation which validates said payments made on the DBE Monthly Participation Reports. This information shall be required monthly and submitted with the DBE Monthly Participation Report.

C. Failure to respond within the time allowed in the request will be grounds for withholding all payments on all Contracts.

SUBSTITUTION OF DBEs: The Contractor shall make reasonable efforts to replace a DBE Subcontractor unable to perform work for any reason with another DBE. The Department shall approve all substitutions of Subcontractors in order to ensure the substitute firms are eligible DBEs.

CERTIFICATION OF DBEs: To ensure the DBE Program benefits only firms owned and controlled by Disadvantaged Individuals, the Department shall certify the eligibility of DBEs and joint ventures involving DBEs named by bidders.

Questions concerning DBE Certification/Criteria should be directed to the EEO Office at (404) 631-1972.

ATTACHMENT 7 TO EXHIBIT 8

DEBARMENT AND SUSPENSION CERTIFICATION

1. By signing and submitting its proposal or bid, and by executing the DB Agreement or and Contract, each prospective Design-Build Team member (at all tiers) shall be deemed to have signed and delivered the following certification:

The undersigned certifies to the best of its knowledge and belief, that it and its principals:

a. Are not presently debarred, suspended, proposed for debarment, declared ineligible, or voluntarily excluded from covered transactions by any federal department or agency;

b. Have not within a 3-year period preceding this proposal been convicted of or had a civil judgment rendered against them for commission of fraud or a criminal offense in connection with obtaining, attempting to obtain, or performing a public (federal, state or local) transaction or contract under a public transaction; violation of federal or state antitrust statutes or commission of embezzlement, theft, forgery, bribery, falsification or destruction of records, making false statements, or receiving stolen property;

c. Are not presently indicted for or otherwise criminally or civilly charged by a governmental entity (federal, state or local) with commission of any of the offenses enumerated in paragraph 1b of this certification; and

d. Have not within a 3-year period preceding this application/proposal had one or more public transactions (federal, state or local) terminated for cause or default.

2. Where the prospective Design-Build Team member is unable to certify to any of the statements in this certification, such Person shall attach a certification to its proposal or bid, or shall submit it with the executed DB Agreement or Contract, stating that it is unable to provide the certification and explaining the reasons for such inability.

ATTACHMENT 8 TO EXHIBIT 8

CERTIFICATION REGARDING USE OF CONTRACT FUNDS FOR LOBBYING

By signing and submitting its proposal or bid, and by executing the DB Agreement or any Contract, each prospective Design-Build Team and Contractor (at all tiers) shall be deemed to have signed and delivered the following:

1. The prospective Design-Build Team/Contract certifies, to the best of its knowledge and belief, that:

a. No federal appropriated funds have been paid or will be paid, by or on behalf of the undersigned, to any person for influencing or attempting to influence an officer or employee of any federal agency, a Member of Congress, an officer or employee of Congress, or an employee of a Member of Congress in connection with the awarding of **ANY** federal contract, the making of any federal grant, the making of any federal loan, the entering into of any cooperative agreement, and the extension, continuation, renewal, amendment, or modification of any federal contract, grant, loan, or cooperative agreement.

b. If any funds other than federal appropriated funds have been paid or will be paid to any person for influencing or attempting to influence an officer or employee of any federal agency, a member of Congress, an officer or employee of Congress, or an employee of a member of Congress in connection with **THIS** Federal contract, grant, loan, or cooperative agreement, the undersigned shall complete and submit Standard Form-LLL, "Disclosure Form to Report Lobbying," in accordance with its instructions, and shall include a copy of said form in its proposal or bid, or submit it with the executed DB Agreement or Contract.

2. This certification is a material representation of fact upon which reliance was placed when this transaction was made or entered into. Submission of this certification is a prerequisite for making or entering into this transaction imposed by 31 U.S.C. § 1352. Any person who fails to file the required certification shall be subject to a civil penalty of not less than $10,000 and not more than $100,000 for each such failure.

3. Design-Build Team/Contractor shall require that the language of this certification be included in all lower tier Contracts which exceed $100,000 and that all such recipients shall certify and disclose accordingly.

4. The undersigned certifies or affirms the truthfulness and accuracy of each statement of its certification and disclosure, if any. In addition, the undersigned understands and agrees that the provisions of 31 U.S.C. §3801, et seq., apply to this certification and disclosure, if any.

[Note: Pursuant to 31 U.S.C. § 1352(c)(1)-(2)(A), any person who makes a prohibited expenditure or fails to file or amend a required certification or disclosure form shall be subject to a civil penalty of not less than $10,000 and not more than $100,000 for each expenditure or failure.]

NOTE: DESIGN-BUILD TEAM AND EACH CONTRACTOR IS REQUIRED, PURSUANT TO FEDERAL LAW, TO INCLUDE THE ABOVE LANGUAGE IN CONTRACTS OVER $100,000 AND TO OBTAIN THIS LOBBYING CERTIFICATE FROM EACH CONTRACTOR BEING PAID $100,000 OR MORE.

ATTACHMENT 9 TO EXHIBIT 8

RESERVED

ATTACHMENT 10 TO EXHIBIT 8

COMPLIANCE WITH BUY AMERICA REQUIREMENTS

Design-Build Team shall comply with the Federal Highway Administration (FHWA) Buy America Requirement in 23 CFR 635.410, which permits FHWA participation in this Agreement only if domestic steel and iron will be used on the Project. To be considered domestic, all steel and iron used and all products manufactured from steel and iron must be produced in the United States and all manufacturing processes, including application of a coating, for these materials must occur in the United States. Coating includes all processes that protect or enhance the value of the material to which the coating is applied. This requirement does not preclude a minimal use of foreign steel and iron materials, provided the cost of such materials does not exceed 0.1% of the contract price under the DB Agreement.

Concurrently with execution of the Agreement, Design-Build Team has completed and submitted, or shall complete and submit, to GDOT a Buy America Certificate, in the format below. After submittal, Design-Build Team is bound by its original certification.

A false certification is a criminal act in violation of 18 U.S.C. § 1001. Should this Agreement be investigated, Design-Build Team has the burden of proof to establish that it is in compliance.

At Design-Build Team's request, GDOT may, but is not obligated to, seek a waiver of Buy America requirements if grounds for the waiver exist. However, Design-Build Team certifies that it will comply with the applicable Buy America requirements if a waiver of those requirements is not available or not pursued by GDOT. A request for a waiver shall be treated as a Change Request under ~~Section~~ Article 14.2 of the Agreement.

BUY AMERICA CERTIFICATE

Certificate of Compliance

Insert Completed Form J in Executed Version

EXHIBIT 9

MILESTONE SCHEDULE

Milestone	Deadline
Substantial Completion Deadline (Intermediate Completion)	540 days after the date GDOT issues NTP1
Maintenance Acceptance Deadline	180 days after Substantial Completion
Final Acceptance (See Exhibit 18 – Section 1.1.(d))	05/31/2018

EXHIBIT 10

RESERVED

EXHIBIT 11

HAZARDOUS MATERIALS RISK ALLOCATION TERMS

1. Design-Build Team shall be solely responsible for Hazardous Materials Management, including all required remediation and disposal of Hazardous Materials that constitute Design-Build Team Releases of Hazardous Materials or which are otherwise with respect to any Additional Properties or Project Specific Locations, Design-Build Team shall be responsible for all Hazardous Materials Management for Design-Build Team Release(s) of Hazardous Materials or with respect to Additional Properties, even if the required Hazardous Materials Management extends beyond the end of the Term or Final Acceptance of the Work.

2. Other than a Design-Build Team Releases of Hazardous Materials or with respect to any Additional Properties or Project Specific Locations, GDOT shall, at its own expense shall manage, treat, handle, store, remediate, remove, transport (where applicable), investigate, oversee and dispose of such Hazardous Materials in accordance with applicable Law and Governmental Approvals or otherwise enter into a Supplement Agreement with the Design-Build Team, or order such Work pursuant to Directive Letter (provided that GDOT may not require any long term monitoring of Hazardous Materials under any such Directive Letter), with respect to same.

3. Notwithstanding the aforementioned or anything to the contrary in the Agreement, none of the following costs and expenses shall be chargeable to or reimbursed by GDOT:

(a) Costs and expenses to the extent attributable to Design-Build Team Releases of Hazardous Materials;

(b) Delay and disruption costs and expenses, except to the extent expressly set forth under the Agreement;

(c) Costs and expenses that could be avoided by the exercise of commercially reasonable efforts to mitigate and reduce cost; and

(d) Attorney's fees or other expenses incurred by Design-Build Team in demonstrating or determining the proportionate responsibility between the parties as to Design-Build Team Releases of Hazardous Materials, GDOT Releases of Hazardous Materials, Pre-existing Hazardous Materials, and/or Hazardous Materials due to any third party.

4. Nothing contained herein shall be interpreted to limit Design-Build Team's obligations with respect to ~~Sections~~ Articles 7.8 or ~~-~~7.9 of the Agreement.

EXHIBIT 12

RESERVED

EXHIBIT 13

RESERVED

EXHIBIT 14

DESIGN-BUILD TEAM'S DBE COMMITMENTS LIST

[To be provided with execution version]

EXHIBIT 15

RESERVED

EXHIBIT 16

RESERVED

EXHIBIT 17

RESERVED

EXHIBIT 18

MEASURES OF LIQUIDATED DAMAGES and NONREFUNDABLE DEDUCTIONS

1.1 For Late Substantial Completion and Late Final Acceptance

(a) Liquidated damages for late Substantial Completion for the Project shall equal $391 per day for each day that the Substantial Completion Date is later than the Substantial Completion Deadline, as the Substantial Completion Deadline may be extended pursuant to this Agreement. Substantial Completion will include all work described in the Contract except for landscaping acceptance as described in Section 15 and Standard Specification 702.

(b) Liquidated damages for late Maintenance Acceptance shall equal $391 per day for each day that the date of Maintenance Acceptance is later than the Maintenance Acceptance Deadline, as the Maintenance Acceptance Deadline may be extended pursuant to this Agreement.

(c) Liquidated damages on account of any failure to achieve Maintenance Acceptance by the Maintenance Acceptance Deadline shall not be in cumulative and addition to liquidated damages under subpart (a) above where Substantial Completion is not achieved by the Substantial Completion Deadline, provided that where any such liquidated damages under subpart (a) cease to then accrue as a result of achieving Substantial Completion, and the Maintenance Acceptance Deadline, as may thereafter be revised is not met, subpart (b) shall then apply.

(d) Liquidated damages for late Final Acceptance shall equal $100 per day for each day that Final Inspection is not achieved as per the Standard Specification 702.3.06.

1.2 Incident Based Liquidated Damages

Liquidated damages upon the occurrence of the following, which shall not be cumulative, for any single occurrence. Where there are multiple incidents as set forth below contributing to a single occurrence, the highest applicable incident based liquidated damages relative to such occurrence shall apply.

1	Failure to reopen lanes specified in Volume 2 Section 18.3.1.1.2.1	**$ 5,000 per hour***
2	Failure to reopen lanes specified in Volume 2 Section 18.3.1.1.2.2	**$ 5,000 per hour***
3	Failure to reopen lanes specified in Volume 2 Section 18.3.1.1.2.3	**$10,000 per hour***
4	Failure to have the Ramp Meter operational before the allowable 30 day out of service period specified in Volume 2 Section 17.4.1 expires.	**$ 100 per day***

5 ITS System LD are **$1000/hr/component** for an individual component and **$10,000/hr/trunk** fiber for a conduit that affects multiple devices.

6 ITS System Contractor Response during Integration and Testing period are **$1000/hr/component** for an individual component and **$10,000/hr/trunk fiber** for a conduit that affects multiple devices.

7 ITS System Contractor Response during Operational and Performance Testing period are **$1000/hr/component** for an individual component and **$10,000/hr/trunk fiber** for a conduit that affects multiple devices.

8 ITS System Contractor Response during Warranty Period are **$1000/hr/component** for an individual component and **$10,000/hr/trunk fiber** for a conduit that affects multiple devices.

*In addition to liquidated damages, Design-Build Team shall be liable for any fines assessed against GDOT as a result of the any noncompliance event as provided herein.

1.3 Incident Based Nonrefundable Deductions

Nonrefundable deductions upon the occurrence of the following, which shall not be cumulative, for any single occurrence. Where there are multiple incidents as set forth below contributing to a single occurrence, the highest applicable incident based liquidated damages relative to such occurrence shall apply.

1	Causing environmental damage in contravention of Section 4 of the Technical Provisions and NEPA Approval	**$500 per occurrence***
2	Failure to establish and maintain traffic in accordance with an approved Traffic Management Plan in accordance with Design-Build Team's Work, including in Related Transportation Facilities and GP traffic lanes as required by Section 18.2 and Section 18.3 of the Technical Provisions.	**$500 per occurrence***
3	A failure to follow the approved procedures outlined in the Utility Emergency Procedures Plan as required in Section 6 of Technical Provisions.	**$1,000 per occurrence***
4	Failure for the Design-Build Team to comply with any of its responsibilities per the requirements of Section 2.3.17 Construction Quality Management Plan, Attachment 2.1, and Attachment 2.5 of the Technical Provisions.	**$500 per occurrence***
5	Failure for the Design-Build Team to complete the Bridge Maintenance and Approach Work in the two (2) allotted 56-hour periods resulting in an additional weekend closure.	**$25,000 per occurrence***

*In addition to nonrefundable deductions, Design-Build Team shall be liable for any fines assessed against GDOT as a result of the any noncompliance event as provided.

EXHIBIT 19

Insert completed Form R in executed version

EXHIBIT 20

TERMS FOR TERMINATION COMPENSATION

A. Compensation on Termination for Convenience, for GDOT Default, or for GDOT Suspension of Work

1. In the event of termination of the Agreement under ~~Section~~ Article 19.1 (Termination for Convenience) or Section 19.4 (Termination for GDOT Default or Suspension of Work), the Termination Compensation shall equal:

(i) That portion of the DB Contract Sum on account of (a) Work performed; plus

(ii) The amount necessary to reimburse reasonable and documented out-of-pocket costs of third party and Affiliate Contractors to demobilize and terminate under Contracts between Design-Build Team and third parties or Affiliates for performance of Work, excluding Design-Build Team's non-contractual liabilities and indemnity liabilities (contractual or non-contractual) to third parties or Affiliates; plus

(iii) If termination occurs prior to Substantial Completion, Design-Build Team's own reasonable and documented out-of-pocket costs to demobilize (without duplication) and carry out termination obligations as may directed by GDOT or required pursuant to the Agreement; plus

(iv) Any reimbursement due to Design-Build Team pursuant to ~~Section~~ Article 17.3.6.2(b); plus

(v) Breakage Costs; minus

(vi) The amount of all distributions and all payments to Affiliates in excess of reasonable compensation for necessary services or that are advance payments in violation of ~~Section~~ Article 10.5.3 of the Agreement, between the date notice of conditional election to terminate is delivered and the Early Termination Date, but without double counting of the amounts under any clauses above; minus

(vii) The sum of (i) the greater of (A) the proceeds received from insurance (including casualty insurance and business interruption insurance) that is required to be carried pursuant to ~~Section~~ Article 16.1 of the Agreement and provides coverage to pay, reimburse or provide for any of the costs and losses attributable to any Force Majeure Event, and (B) the proceeds received from insurance that is actually carried by or insuring Design-Build Team under policies solely with respect to the Project and the Work, regardless of whether required to be carried pursuant to ~~Section~~ Article 16.1 of the Agreement, and that provides coverage to pay, reimburse or provide for any of the costs and losses attributable to any Force Majeure Event, plus (ii) the foregoing costs and losses that Design-Build Team is deemed to have self-insured pursuant to ~~Section~~ Article 16.1.4.3 of the Agreement; minus

(viii) The portion of any Compensation Amounts previously paid to (or charged against) Design-Build Team that compensated Design-Build Team for Work attributable to the period after the Early Termination Date.

2. In the event of termination of the Agreement under ~~Section~~ Article 19.1 (Termination for Convenience) or ~~Section~~ Article 19.4 (Termination for GDOT Default or Suspension of Work), any such Termination Compensation shall be payable by GDOT as follows:

(i) For Termination for Convenience

(a) Termination for Convenience shall be valid and effective on the date set forth in the Notice of Termination for Convenience, which date shall not be more than three (3) months after the date the notice is delivered.

(b) GDOT shall deliver to Design-Build Team, in immediately available funds, within sixty (60) days after the Early Termination Date, the Termination Compensation due, less a holdback amount equal to GDOT's reasonable estimate of the costs Design-Build Team will thereafter incur to perform and complete its post-termination obligations under ~~Section~~ Article 19.5 of the Agreement, subject to Sections (ii)(b) -(d) below.

(ii) For Termination for GDOT Default or Suspension of Work

(a) If the Agreement is terminated due to Design-Build Team's exercise of its right to terminate under Section 19.4 of the Agreement, termination shall be valid and effective on the date notice of termination is delivered; and, subject to ~~Sections~~ Articles 19.3.2 and 19.4.4, GDOT shall deliver to Design-Build Team, in immediately available funds, within sixty (60) days after the Early Termination Date, the Termination Compensation due, less a holdback amount equal to GDOT's reasonable estimate of the costs Design-Build Team will thereafter incur to perform and complete its post-termination obligations under ~~Section~~ Article 19.5 of the Agreement.

(b) GDOT shall pay the holdback amount to Design-Build Team within ten (10) days after Design-Build Team completes all its post-termination obligations under ~~Section~~ Article 19.5 of the Agreement.

(c) If as of the date GDOT tenders payment under clause (a) above the Parties have not agreed upon the amount of Termination Compensation due, then:

(i) GDOT shall proceed with such payment to Design-Build Team;

(ii) Within thirty (30) days after receiving such payment Design-Build Team shall deliver to GDOT written notice of the additional amount of Termination Compensation that Design-Build Team in good faith determines is still owing (the "disputed portion");

(iii) GDOT shall pay the disputed portion of the Termination Compensation to Design-Build Team in immediately available funds within thirty (30) days after the disputed portion is determined by settlement, final order or final judgment, and also shall pay interest thereon, at the Default Interest Rate from the Early Termination Date until paid; and

(iv) A failure by GDOT to effect payment by such date shall not entitle Design-Build Team to reinstatement of the Design-Build Team's Interest or to rescission of the termination.

(d) From and after the Early Termination Date until the Termination Compensation is finally determined and paid, the provisions of ~~Section~~ Article 19.10 of the Agreement shall apply and Design-Build Team shall continue to have a pledge of and security interest in and to the Post-Termination Revenue Account and Security Instruments.

(e) If it is determined by settlement or final judgment that the Termination Compensation due from GDOT is less than the payment previously made by GDOT, then within thirty (30) days after the date of settlement or final judgment Design-Build Team shall reimburse the excess payment, together with interest thereon at the Default Interest Rate from the date of overpayment until the date of reimbursement.

(f) Any amounts to be paid by GDOT pursuant hereto shall be subject to Default Interest Rate from the date that such payment shall be due until paid.

B. Compensation on Termination for Design-Build Team Default

1. Design-Build Team shall not be entitled to receive any compensation where the Agreement is terminated by GDOT pursuant to ~~Section~~ Article 19.3 as a result a Design-Build Team Default if it has been determined by GDOT that the damages incurred by GDOT and costs to complete the Work as a result of the Design-Build Team Default exceed the unpaid balance of the DB Contract Sum. In no event shall Design-Build Team be entitled to Breakage Fees or any direct costs, including demobilization, associated with a termination by GDOT pursuant to ~~Section~~ Article 19.3.

C. Claims

1. Notwithstanding anything to the contrary herein, Termination Compensation shall include and be adjusted on account of any outstanding Claim that is independent of the event of termination and which is not otherwise resolved as of the effective date of such termination. The Parties shall adjust the Termination Compensation by the amount of the unpaid award, if any, on the Claim.

2. At GDOT's sole election, it may hold back from payment of the Termination Compensation for deposit into the GDOT Claims Account the amount of any Claim of GDOT against Design-Build Team not resolved prior to payment. GDOT shall provide written notice to Design-Build Team of any such election, the subject Claim and the amount deposited or to be deposited, prior to or concurrently with tendering payment of the Termination Compensation.

3. If as of the date GDOT tenders payment under clause (a) above the Parties have not agreed upon the amount of Termination Compensation due, then:

(i) GDOT shall proceed with such payment to Design-Build Team;

(ii) Within thirty (30) days after receiving such payment Design-Build Team shall deliver to GDOT written notice of the additional amount of Termination Compensation that Design-Build Team in good faith determines is still owing (the "disputed portion");

(iii) GDOT shall pay the disputed portion of the Termination Compensation to Design-Build Team in immediately available funds within thirty (30) days after the disputed portion is determined by settlement, final order or final judgment, together with interest thereon at the Default Interest Rate from the later of the two dates set forth in clause (a) above until paid; and

(iv) Failure by GDOT to effect payment by such date shall not entitle Design-Build Team to reinstatement of the Design-Build Team's Interest or to rescission of the termination.

4. If it is determined by settlement or final judgment that the Termination Compensation due from GDOT is less than the payment previously made by GDOT, then within thirty (30) days after the date of settlement or final judgment Design-Build Team shall reimburse the excess payment, together with interest thereon at the Default Interest Rate from the date of overpayment until the date of reimbursement.

EXHIBIT 21

RESERVED

EXHIBIT 22

INITIAL DESIGNATION OF AUTHORIZED REPRESENTATIVES

GDOT's Authorized Representative:

GDOT hereby designates the persons from time to time serving as the _____ of GDOT as its Authorized Representatives and such other persons as the Commissioner may from time to time designate by delivering written notice thereof to Design-Build Team. Any such designations by the Commissioner may be limited in scope and duration and may be revoked at any time by delivery of written notice thereof to Design-Build Team pursuant to ~~Section~~ Article 24.11 of the Agreement.

Design-Build Team's Authorized Representative:

Design-Build Team hereby designates the persons from time to time serving as the Chief Executive Officer of Design-Build Team as its Authorized Representatives and such other persons as the Chief Executive Officer may from time to time designate by delivering written notice thereof to GDOT. Any such designations by the Chief Executive Officer may be limited in scope and duration and may be revoked at any time by delivery of written notice thereof to GDOT pursuant to ~~Section~~ Article 24.11 of the Agreement.

Georgia Department of Transportation

VOLUME 2

Technical Provisions
For

Design-Build Agreement

I-285 RAMPS AT CR 209/ RIVERSIDE DRIVE PROJECT

PI No. 0010925

TABLE OF CONTENTS

1 GENERAL 1
1.1 Project Scope 1
1.2 Project Description 1
1.2.1 Other Considerations 1
2 PROJECT MANAGEMENT 1
2.1 Project Management Plan Requirements 1
2.1.1 Project Descriptions and Scope of Work 1
2.1.2 Project Organizational Chart, Roles and Responsibilities 1
2.1.3 Project Phases 1
2.1.4 Design Quality Assurance 1
2.1.5 Construction Quality Assurance 1
2.1.6 Environmental Monitoring 1
2.1.7 Right of Way 2
2.1.8 Safety and Security 2
2.1.9 Traffic Management 2
2.1.10 Project Communications (Media and Public Information) 2
2.1.11 Closeout Plan 2
2.1.12 Appendices 2
2.1.13 Project Management Plan Checklist 2
2.2 Schedule and Quality Management Requirements 2
2.2.1 General Schedule Requirements 2
2.2.2 Required Schedule Submittals 3
2.2.3 Project Baseline Schedule 3
2.2.4 Project Status Schedule Updates 3
2.2.5 Project Baseline Schedule Revisions 3
2.3.1 Document Management 3
2.3.2 Quality Management Plan Submittal Requirements 3
2.3.3 Quality Management Plan Requirements 3
2.3.4 Quality Management Plan Structure 3
2.3.5 Nonconformance Report (NCR) System 3
2.3.6 Quality Management Updates 4
2.3.7 Responsibility and Authority of DB Team Staff 4
2.3.8 Design Quality Management Plan 4
2.3.9 Record Drawings and Documentation 4
2.4 Requirements for GDOT Office and Equipment 4
3 RESERVED 1
4 ENVIRONMENTAL 1
4.1 General Requirements 1
4.2 Environmental Approvals 2
4.2.1 Responsibilities Regarding Environmental Studies 2
4.2.2 GDOT Review and Approval of Environmental Permits 2
4.3 Required Submittals 2

5 RIGHT OF WAY (ROW) 1
5.1 General Requirements 1
5.3 DB Team's ROW Scope of Services 1
5.4 Responsibilities of DB Team 1
5.5 Responsibilities of GDOT 1
5.6 GDOT Project Monitor/Reviewer 1
5.7 Responsibilities of the Office of the Attorney General 1
5.8 ROW Acquisition Plan 1
5.9 Schedule and Review Procedures 1
5.10 Acquisition Process Summary 1
5.11 DB Team Conflict of Interest 2
5.12 Meetings 2
5.13 Documentation and Reporting 2
5.14 Pre-Acquisition Activities 2
5.14.1 ROW Plans and Engineering 2
5.14.2 Title Services 2
5.14.3 Introduction to Property Owners 2
5.15 Appraisals 2
5.15.1 Appraisal Services 2
5.16 Acquisition Activities 2
5.16.1 DB Team Responsibilities During ROW Negotiations 2
5.17 Early ROW Acquisition 3

6 UTILITY ADJUSTMENTS 1
6.1 General Requirements 1
6.1.1 When Utility Adjustment is Required 1
6.1.2 Certain Components of the Utility Adjustment Work 1
6.1.3 Recordkeeping 1
6.2 Administrative Requirements 1
6.2.1 Standards 1
6.2.2 Communications 2
6.2.3 Worksite Utility Coordination Supervisor 2
6.2.4 Real Property Matters 2
6.3 Design 2
6.3.1 DB Team's Responsibility for Utility Identification 2
6.3.2 Technical Criteria and Performance Standards 2
6.3.3 Memorandum of Understanding (MOU) 2
6.3.4 Utility Work Plans 3
6.4 Construction 3
6.4.1 Reserved 3
6.4.2 General Construction Criteria 3
6.4.3 Inspection of Utility Owner Construction 3
6.4.4 Scheduling Utility Adjustment Work 3
6.4.5 Standard of Care Regarding Utilities 3
6.4.6 Emergency Procedures 3
6.4.7 Switch Over to New Facilities 4
6.4.8 Traffic Control 4

6.5 Deliverables 4
6.5.1 Utility Work Plan Submittals 4
6.5.2 Preliminary Utility Status Report 4
6.5.3 Subsurface Utility Engineering (SUE) Requirements 4
6.5.4 Utility As-Built Requirements 4

7 RIGHT OF WAY (ROW) – ADDITIONAL PROPERTIES 1
7.1 General Requirements 1
7.2 Administrative Requirements 1
7.2.1 Revised ROW Acquisition Plan - Additional Properties Submittals 1
7.2.2 DB Teams ROW Properties Scope of Services 1
7.2.3 Requirements of DB Team 1
7.2.4 DB Team Conflict of Interest 1
7.2.5 Meetings 1
7.2.6 Documentation and Reporting 1
7.2.7 Responsibilities of GDOT 1
7.2.8 Responsibilities of the Office of Georgia Attorney General 1
7.3 Reserved 1
7.4 Reserved 2
7.4.1 Reserved 2
7.4.2 Property Fencing 2
7.5 Access to the Work 2

8 GEOTECHNICAL 1
8.1 General Requirements 1
8.2 Design Requirements 1
8.2.1 Subsurface Geotechnical Investigation by DB Team 1
8.2.2 Pavement Design 1
8.3 Construction 1
8.4 Deliverables 1

9 SURVEYING AND MAPPING 1
9.1 General Requirements 1
9.2 Administrative Requirements 1
9.2.1 Property Owner Notification 1
9.3 Design Requirements 1
9.3.1 Units 1
9.3.2 Survey Control Requirements 1
9.3.3 Conventional Method (Horizontal & Vertical) 1
9.3.4 Reserved 1
9.3.5 Right of Way Survey 1
9.3.6 Survey Records and Reports 2
9.4 Construction Requirements 2
9.4.1 Units 2
9.4.2 Construction Surveys 2
9.5 Deliverables 2
9.5.1 Final ROW Surveying and Mapping 2
9.5.2 ROW Monuments 2

10 GRADING 1
10.1 General 1
10.2 Preparation within Project Limits 1
10.3 Slopes and Topsoil 1
10.4 Deliverables 1
10.4.1 Released for Construction Documents 1

11 ROADWAYS 1
11.1 General Requirements 1
11.2 Design Requirements 1
11.2.1 Typical Section(s) and Pavement Design 1
11.2.2 Additional Roadway Design Requirements 4
11.2.3 Allowable Design Exception(s)/Variance(s) 4
11.2.4 Visual Quality 4
11.2.5 Permanent Lighting 4
11.2.6 Related Transportation Facilities 5
11.3 Deliverables 5

12 DRAINAGE 1
12.1 General Requirements 1
12.2 Administrative Requirements 1
12.2.1 Data Collection 1
12.2.2 Coordination with Other Agencies 1
12.3 Design Requirements 1
12.3.1 Surface Hydrology 1
12.3.2 Storm Sewer Systems 1
12.3.3 Hydraulic Structures (Culverts/Bridges) 2
12.4 Construction Requirements 2
12.5 Deliverables 2

13 STRUCTURES 1
13.1 General Requirements 1
13.2 Design Requirements 1
13.2.1 Design Parameters 1
13.2.2 Bridge Decks and Superstructures 1
13.2.3 Bridge/ Retaining Wall Foundations 1
13.2.4 Bridge Railing and Barriers 1
13.2.5 Retaining Walls 1
13.2.6 Aesthetics 1
13.2.7 Drainage Structures 1
13.2.8 Sign, Illumination, and Traffic Signal Supports 1
13.2.9 Widening/Modification of Existing Structure 1
13.2.10 Toll Gantry Structures 2
13.3 Construction Requirements 2
13.3.1 Concrete Finishes 2
13.3.2 Structure Metals 2
13.4 Final Bridge Inspection Prior to Service Commencement 2
13.5 Deliverables 2

14 RESERVED 1

15 LANDSCAPE AND HARDSCAPE ENHANCEMENTS 1
15.1 General Requirements 1
15.2 Administrative Requirements 1
15.2.1 Design Requirements 1
15.2.1 Reserved 1
15.2.2 Personnel 1
15.3 Design Requirements 1
15.3.1 Landscape and Hardscape Enhancement Principles and Strategies 2
15.3.2 Reserved 2
15.3.3 Reserved 2
15.3.4 Trees, Shrubs, and Other Plant Materials 2
15.3.5 Reversed 2
15.3.6 Reserved 2
15.4 Construction Requirements 2
15.5 Deliverables 2

16 SIGNING, PAVEMENT MARKING, SIGNALIZATION 1
16.1 General Requirements 1
16.2 Administrative Requirements 1
16.2.1 Meetings 1
16.3 Design Requirements 1
16.3.1 Final Plans 1
16.3.2 Permanent Signing and Delineation 1
16.3.3 Project Signs – Outside the Existing and Proposed ROW 1
16.3.4 Reserved 1
16.3.5 Specific Service Signs 1
16.3.6 Sign Support Structures 1
16.3.7 Permanent Pavement Marking 1
16.3.8 Permanent Signalization 2
16.4 Construction Requirements 2
16.4.1 Permanent Signing and Delineation 2
16.4.2 Permanent Pavement Marking 2
16.4.3 Permanent Signalization 2
16.5 Deliverables 2
16.5.1 Permanent Signing and Delineation 2
16.5.2 Permanent Pavement Marking 3
16.5.3 Permanent Signalization 3

17 INTELLIGENT TRANSPORATION SYSTEMS 1
17.1 General Description 1
17.1.1 General Purpose 1
17.1.2 Reserved 1
17.1.3 Transportation Management Center (TMC) Improvements 1
17.2 Design and Construction Requirements 1
17.3 Testing and Acceptance 1
17.3.1 End-To-End Testing 1

17.4 Warranty 1
17.4.1 Protection of Existing ITS Signalization 1

18 TRAFFIC CONTROL 1
18.1 General Requirements 1
18.2 Administrative Requirements 1
18.2.1 Transportation Management Plan 1
18.3 Design Requirements 1
18.3.1 Traffic Control Plans 1
18.4 Construction Requirements 3
18.4.1 DB Team Responsibility 3
18.4.2 Access 3
18.4.3 Detours 3

19 MAINTENANCE DURING THE DESIGN-BUILD PERIOD 1
19.1 General Requirements 1
19.1.1 Reserved 1
19.1.2 GDOT Obligation to Repair 1

20 BICYCLE AND PEDESTRIAN FACILITIES 1
20.1 General Requirements 1
20.2 Design Requirements 1
20.2.1 Bicycle Facilities 1
20.2.2 Pedestrian Facilities 1
20.2.3 Final Plans 1

21 RESERVED 1

22 SOUND BARRIERS 1
22.1 General 1

23 SUBMITTALS 1
23.1 General 1
23.2 Design Submittals and Progress of Design Work 1
23.2.1 Construction Phasing and Additional Submittal Requirements 10
23.3 Submittals Process 10
23.4 Shop Drawings and Temporary Work Submittals 10
23.4.1 General 10
23.4.2 Work Items Requiring Shop Drawings 10
23.4.3 Schedule of Submittals 10
23.4.4 Style, Numbering, and Material of Submittals 10
23.4.5 Submittals and Copies 10
23.4.6 Processing of Shop Drawings 10
23.4.7 Other Requirements for Shop Drawings for Bridges 10
23.4.8 Modifications on Construction 10
23.5 As-Built Plans 10

Volume 2 Attachments

Attachment 6-1 Utility Memorandums of Understanding

Attachment 6-2 Special Provision 660 - Sanitary Sewers

Attachment 6-3 Special Provision 670 - Water

Attachment 11-1 Lighting Specifications – Roadway Lighting

Attachment 11-2 Lighting Specifications – Roundabout Lighting

Attachment 13-1 Special Provision 449 – Silicon Joint

Attachment 13-2 Special Provision 519 – Polymer Overlay

Attachment 13-3 Special Provision 521 – Patching Concrete Bridge Structures

1 GENERAL

Supplement the following to Section 1 of Volume 3

1.1 Project Scope

The Project is being procured to enhance safety at the intersections of Riverside Drive and I-285 Ramps in Fulton County, GA.

The proposed Design-Build project is located on Riverside Drive at the interchange with I-285 in Fulton County Georgia and is within the city limits of Sandy Springs. The proposed Design-Build project will convert the signalized intersections at the ramp termini to single lane roundabouts, one at each intersection. Each approach to the roundabout will be widened to two lanes with one lane entering the roundabout and the other serving as a right turn lane. Sidewalks will be added to both sides of the roadway along Riverside Driveway within the limits of the project. The project is approximately 0.5 mile length.

Additionally the project will also include replacement of the joints at bent 2 and abutments 1 and 5. All construction joints will be resealed and the bridge deck will be sealed with a two-part polymer overlay. Concrete spalling will be repaired on bents 3 & 4 and abutment 5. Bridge work will also include any required approach work due to the construction of the projects 2 roundabouts.

1.2 Project Description

1.2.1 Other Considerations

The DB Team's design plans for Project shall comply with all requirements set forth in the DB Documents. The DB Team's design plans for the Project shall be consistent with the following:

- NEPA Approval
- Concept Report
- Reference Information Documents (RID)

Any additions to the Existing ROW required for construction or operation of the proposed Project shall be illustrated on the DB Team's design plans for the Project.

The DB Team shall not rely on the physical description contained herein to identify all Project components. The DB Team shall determine the full scope of the Project through thorough examination of the DB Documents and the Project or as may be reasonably inferred from such examination.

Design and Construction Requirements

DB Team shall design and construct the Project to comply with the requirements of the DB Documents.

DB Team shall coordinate with GDOT and adjacent Governmental Entities and other third parties as appropriate to determine the design criteria, standards, and specifications of those components of Work which the DB Team will construct but which are to be maintained by others. For components of Work which potentially or actually impact the infrastructure of any Governmental Entity or third party entity, DB Team's design shall conform to the design requirements of such entity.

The DB Team shall replace existing impacted facilities in kind or upgrade. Possible affected resources include, but are not limited to the following: GDOT ITS system, signing and marking, sidewalk, utilities, and any utility prescriptive access and ingress to easement or right of way.

2 PROJECT MANAGEMENT

2.1 Project Management Plan Requirements

PROJECT MANAGEMENT PLAN - The Project Management Plan shall document the procedures and processes that are in effect to provide timely information to the project decision makers to effectively manage the scope, costs, schedules, and quality of, and the Federal requirements applicable to, the project; and the role of the agency leadership and management team in the delivery of the project. The DB Team is required to complete the following Management Plans/documents and include as Appendices to the Project Management Plan in addition to the Project Management Plan requirements in this Section 2. The requirements of these management plans and documents can be found throughout the Technical Provisions. The management plans and time of when each management plan shall be submitted for GDOT review follows:

- ~~Public Information and Communications Plan (PICP) (DB Team input to GDOT developed draft) (within thirty (30) Days from NTP 1)~~
- ~~Comprehensive Environmental Protection Program (CEPP) (within one hundred and twenty (120) Days from NTP 1, must be accepted prior to NTP 3)~~
- Demolition and Abandonment Plan (within one hundred and eighty (180) Days from NTP 1, must be accepted prior to NTP 3)

2.1.1 Project Descriptions and Scope of Work

No additional requirements

2.1.2 Project Organizational Chart, Roles and Responsibilities

No additional requirements

2.1.3 Project Phases

No additional requirements

2.1.4 Design Quality Assurance

No additional requirements

2.1.5 Construction Quality Assurance

GDOT will provide plant inspection, testing and certification of plant produced materials at existing GDOT approved plant locations such as for precast/pre-stressed concrete, asphalt, and structural steel fabrication.

2.1.6 Environmental Monitoring

No additional requirements

2.1.7 Right of Way

No additional requirements

2.1.8 Safety and Security

No additional requirements

2.1.9 Traffic Management

No additional requirements

2.1.10 Project Communications (Media and Public Information)

A critical objective for all projects is to maintain the trust, support, and confidence of the media and public throughout the life of the project. In order to meet this objective, it will be critical to proactively manage messages and communications to the media. GDOT will be responsible for all communications with the media; all inquiries from media shall be directed to GDOT for responses. The DB Team shall coordinate and collaborate with GDOT on the development of the media communication and responses to public inquiries regarding the project design and construction status. The DB Team shall ensure updated project information is provided the GDOT in a timely manner. The DB Team shall document all form of project communications with Customer Groups, interested Citizens, stakeholders, and general public.

2.1.11 Closeout Plan

No additional requirements

2.1.12 Appendices

No additional requirements

2.1.13 Project Management Plan Checklist

No additional requirements

2.2 Schedule and Quality Management Requirements

2.2.1 General Schedule Requirements

No additional requirements

2.2.2 Reserved

No additional requirements

~~2.2.2~~2.2.3 Project Baseline~~Required~~ Schedule ~~Submittals~~Requirements

No additional requirements

~~2.2.3~~2.2.4 ~~Project Baseline Schedule~~Narrative Reports

No additional requirements

~~2.2.4~~2.2.5 Project ~~Status~~ Schedule Update Requirements~~s~~

No additional requirements

~~2.2.5~~2.2.6 Project Baseline Schedule Revisions

No additional requirements

2.2.7 Schedule Display Requirements

No additional requirements

2.2.8 Time Extensions and Inclement Weather Delays

No additional requirements

2.3 Quality Management Requirements

2.3.1 Document Management

No additional requirements

2.3.2 Quality Management Plan Submittal Requirements

No additional requirements

2.3.3 Quality Management Plan Requirements

No additional requirements

2.3.4 Quality Management Plan Structure

No additional requirements

2.3.5 Nonconformance Report (NCR) System

No additional requirements

2.3.5.1 Role Definitions and Order of Review

No additional requirements

2.3.5.2 Disposition Options

No additional requirements

2.3.5.3 Corrective Action

No additional requirements

2.3.5.4 Workflow States

No additional requirements

2.3.6 Quality Management Updates

No additional requirements

2.3.7 Responsibility and Authority of DB Team Staff

No additional requirements

2.3.8 Design Quality Management Plan

No additional requirements

2.3.9 Record Drawings and Documentation

No additional requirements

2.4 Requirements for GDOT Office and Equipment

Provide a Field Engineer's Office, refer to Special Provision 153.

2.5 Web-Based Project Management Program

No additional requirements

3 RESERVED

4 ENVIRONMENTAL

4.1 General Requirements

The DB Team will be responsible for inserting the Environmental Resources Impact Table into the plans. Its content and accuracy will be confirmed by the NEPA analyst who is responsible for environmentally certifying the project.

A. Resources to be Delineated on the Plans and/or Listed in the Environmental Resource Impact Table (ERIT)

Resource Name		*Permitted Construction Activity*	*Refer to*	*Name and Date of Report or Transmittal*	*Correctly Shown?*	
					Plan Sheet	*ERIT*
A-1	Intermittent Stream (IS) 1	No Impact	C-1	Ecology Report April 4, 2014	Yes	Yes
A-2	IS 1 Buffer	No Impact	C-1	Ecology Report April 4, 2014	Yes	Yes
A-3	Garrison House	Temporary easement approximately 138 feet long and 12 feet wide, tapering to approximately 6 feet wide at the northern property boundary, Removal of granite curbing and replacement of curbing with concrete. Driveway Relocation.	C-1, C-2	May 2014 History Assessment of Effect Report	"	"
A-4	Migratory Birds	Construction activities on the Riverside Drive bridge over Interstate 285 (I-285), such that harm to migratory birds is avoided.	B-1	SP 107.23G March 14, 2014"and April 4, 2014 Ecology Report	"	"

B. Special Provisions (Attach all special provisions with transmittal letters to the commitments table, if available)

Special Provision		*Purpose*	*Est. Cost*	*SP's Latest Date*
B-1	SP 107.23.G	For the protection of migratory birds and listed species	Negligible	March 14, 2014

C. ERIT Comments and Design Features (Description: For ERIT Comments, provide exact wording for the comments section of the ERIT)

ERIT Comment or Design Feature		*Description*	*Est. Cost*	*Correctly Shown?*
C-1	ERIT Comment	The contractor shall ensure that no construction-related activities (such as the use of easements, staging, construction, vehicular use, borrow or waste activities, sediment basins, and trailer placement), other than those shown on the approved plans, occur within the boundary of this resource.	$0	Yes
C-2	ERIT Comment	The American Holly located on the historic Garrison House property is delineated on the construction plans. The contractor shall only prune limbs necessary for relocation of the driveway. The contractor shall ensure this shrub is preserved during construction. A protective zone marked with protective orange barrier fencing will be placed around the American Holly during construction and the contractor shall ensure that no construction-related	Negligible	Yes

		activities or access occur beyond this orange barrier fencing.		
C-3	Design Feature	For noise abatement: Noise walls along the Westbound I-285 off-ramp will be replaced along parcel 7.	$57,540	Yes
C-4	Design Feature	For noise abatement: Noise walls along the Eastbound I-285 off-ramp will be replaced along parcel 3.	$28,473.	Yes

D. Necessary Permits, Buffer Variances and Mitigation Credits

Permit, Variance, etc.		*Add'l Info (permit expiration date, number of credits needed, etc…)*	*Est. Cost*	*Acquired?*
D-1	Notice of Intent (NOI) for NPDES	The Office of Bidding Administration and Construction Contractor will submit a NOI to the NPDES General Permit following award of the contract but prior to construction.	Negligible	Will be acquired following letting
D-2	MS4	The project area is to be studied for the feasibility of BMPs. If feasible, Georgia DOT and the Construction Contracted will submit the permit following award of the contract but prior to construction.	Negligible	If determined feasible, will be acquired following letting

E. Other Commitments or Requirements (Status: Pre- and Post – Complete or Incomplete; During – Signature Req'd)

Pre-, During, or Post		*Commitment*	*Responsible party*	*Est. Cost*	*Status*
E-1	During	Any bridge closure is restricted to weekend closure. It will be the responsibility of the Contractor to coordinate with the local governments, school board, and emergency services personnel for any proposed weekend bridge closure and detours.	GDOT Innovative Delivery/Design-Build Contractor	Negligible	Incomplete

Total Estimated Cost	$86,013

4.2 Environmental Approvals

4.2.1 Responsibilities Regarding Environmental Studies

No additional requirements

4.2.2 GDOT Review and Approval of Environmental Permits

No additional requirements

4.3 Required Submittals

No additional requirements

5 RIGHT OF WAY (ROW)

5.1 General Requirements

It is anticipated that ROW will be required from seven (7) Parcels; of which three (3) of the Parcels are Easement acquisitions only.

The Department will provide the DB Team with approved Right-of-Way Plans and certified Appraisal Packages. Any changes to the Right-of-Way Plans or Appraisal Packages will be completed by the DB Team. The DB Team shall acquire all ROW and Easements necessary for the Project. The DB Team shall certify all ROW.

5.2 Administrative Requirements

No additional requirements

5.3 DB Team's ROW Scope of Services

No additional requirements

5.4 Responsibilities of DB Team

No additional requirements

5.5 Responsibilities of GDOT

No additional requirements

5.6 GDOT Project Monitor/Reviewer

No additional requirements

5.7 Responsibilities of the Office of the Attorney General

No additional requirements

5.8 ROW Acquisition Plan

No additional requirements

5.9 Schedule and Review Procedures

No additional requirements

5.10 Acquisition Process Summary

No additional requirements

5.11 DB Team Conflict of Interest

No additional requirements

5.12 Meetings

No additional requirements

5.13 Documentation and Reporting

No additional requirements

5.14 Pre-Acquisition Activities

The Department will provide Pre-Acquisition Services for all seven (7) Parcels prior to NTP 1. Any changes to the Right-of-Way Plans requiring additional or updated Pre-Acquisition Services will be completed by the DB Team.

5.14.1 ROW Plans and Engineering

No additional requirements

5.14.2 Title Services

No additional requirements

5.14.3 Introduction to Property Owners

No additional requirements

5.15 Appraisals

5.15.1 Appraisal Services

The Department will provide Appraisal Services for all seven (7) Parcels and will provide the DB Team with certified appraisal packages for all seven (7) Parcels with NTP 1. Any changes to the Right-of-Way Plans requiring additional or updated Appraisals will be completed by the DB Team.

5.16 Acquisition Activities

5.16.1 DB Team Responsibilities During ROW Negotiations

No additional requirements

5.16.2 DB Team Responsibilities During Relocation Assistance

No additional requirements

5.16.3 DB Team Responsibilities During Closings

No additional requirements

5.16.4 DB Team Responsibilities For Condemnation Support

No additional requirements

5.16.5 DB Team Responsibilities For Clearance of ROW

No additional requirements

5.16.6 DB Team Responsibilities For Property Fencing

No additional requirements

5.17 Early ROW Acquisition

No additional requirements

6 UTILITY ADJUSTMENTS

6.1 General Requirements

6.1.1 When Utility Adjustment is Required

No additional requirements

6.1.2 Certain Components of the Utility Adjustment Work

No additional requirements

6.1.2.1 Coordination

No additional requirements

6.1.2.2 Betterments

No additional requirements

6.1.2.3 Protection in Place

No additional requirements

6.1.2.4 Abandonment and Removal

No additional requirements

6.1.2.5 Service Lines and Utility Appurtenances

No additional requirements

6.1.2.6 Early Adjustments

No additional requirements

6.1.3 Recordkeeping

No additional requirements

6.2 Administrative Requirements

No additional requirements

6.2.1 Standards

No additional requirements

6.2.2 Communications

No additional requirements

6.2.2.1 Communication with Utility Owners Meetings and Correspondence

No additional requirements

6.2.3 Worksite Utility Coordination Supervisor

No additional requirements

6.2.4 Real Property Matters

No additional requirements

6.2.4.1 Documentation of Existing Utility Property Interests - Affidavits

No additional requirements

6.2.4.2 Acquisition of Replacement Utility Property Interests

No additional requirements

6.2.4.3 Georgia Utility Permit

No additional requirements

6.2.4.4 Documentation Requirements

No additional requirements

6.3 Design

6.3.1 DB Team's Responsibility for Utility Identification

No additional requirements

6.3.2 Technical Criteria and Performance Standards

No additional requirements

6.3.3 Memorandum of Understanding (MOU)

No additional requirements

6.3.4 Utility Work Plans

No additional requirements

6.3.4.1 Plans Prepared by DB Team

No additional requirements

6.3.4.2 Plans Prepared by the Utility Owner

No additional requirements

6.3.4.3 Design Documents

No additional requirements

6.3.4.4 Certain Requirements for Underground Utilities

No additional requirements

6.3.4.5 Utility Work Plan

No additional requirements

6.4 Construction

6.4.1 Reserved

6.4.2 General Construction Criteria

No additional requirements

6.4.3 Inspection of Utility Owner Construction

No additional requirements

6.4.4 Scheduling Utility Adjustment Work

No additional requirements

6.4.5 Standard of Care Regarding Utilities

No additional requirements

6.4.6 Emergency Procedures

No additional requirements

6.4.7 Switch Over to New Facilities

No additional requirements

6.4.8 Traffic Control

No additional requirements

6.5 Deliverables

No additional requirements

6.5.1 Utility Work Plan Submittals

No additional requirements

6.5.2 Preliminary Utility Status Report

No additional requirements

6.5.3 Subsurface Utility Engineering (SUE) Requirements

No additional requirements

6.5.4 Utility As-Built Requirements

No additional requirements

7 RIGHT OF WAY (ROW) – ADDITIONAL PROPERTIES

7.1 General Requirements

Supplement the following to Section 7.1 of Volume 3

Ensure designing and constructing the Project occurs within the existing ROW and within the Required ROW as designated in the RID.

7.2 Administrative Requirements

No additional requirements

7.2.1 Revised ROW Acquisition Plan - Additional Properties Submittals

No additional requirements

7.2.2 DB Teams ROW Properties Scope of Services

No additional requirements

7.2.3 Requirements of DB Team

Field establish the limits of ROW by staking at a minimum spacing of 100 feet prior to construction and ensure no encroachments will occur as a result of construction.

7.2.4 DB Team Conflict of Interest

No additional requirements

7.2.5 Meetings

No additional requirements

7.2.6 Documentation and Reporting

No additional requirements

7.2.7 Responsibilities of GDOT

No additional requirements

7.2.8 Responsibilities of the Office of Georgia Attorney General

No additional requirements

7.3 Reserved

7.4 Reserved

7.4.1 Reserved

7.4.2 Property Fencing

No additional requirements

7.5 Access to the Work

Following NTP 1, the DB Team shall be afforded access to all Property acquired by GDOT at that point in time.

8 GEOTECHNICAL

8.1 General Requirements

No additional requirements

8.2 Design Requirements

8.2.1 Subsurface Geotechnical Investigation by DB Team

No additional requirements

8.2.2 Pavement Design

No additional requirements

8.3 Construction

No additional requirements

8.4 Deliverables

No additional requirements

9 SURVEYING AND MAPPING

9.1 General Requirements

No additional requirements

9.2 Administrative Requirements

No additional requirements

9.2.1 Property Owner Notification

No additional requirements

9.3 Design Requirements

No additional requirements

9.3.1 Units

No additional requirements

9.3.2 Survey Control Requirements

No additional requirements

9.3.3 Conventional Method (Horizontal & Vertical)

No additional requirements

9.3.3.1 Horizontal Accuracy Requirements for Conventional Surveys

No additional requirements

9.3.3.2 Vertical Accuracy Requirements for Conventional Surveys

No additional requirements

9.3.4 Reserved

No additional requirements

9.3.5 Right of Way Survey

No additional requirements

9.3.5.1 Accuracy Standard

No additional requirements

9.3.6 Survey Records and Reports

No additional requirements

9.4 Construction Requirements

9.4.1 Units

No additional requirements

9.4.2 Construction Surveys

No additional requirements

9.5 Deliverables

9.5.1 Final ROW Surveying and Mapping

No additional requirements

9.5.2 ROW Monuments

No additional requirements

10 GRADING

10.1 General

No additional requirements

10.2 Preparation within Project Limits

No additional requirements

10.3 Slopes and Topsoil

No additional requirements

10.4 Deliverables

No additional requirements

10.4.1 Released for Construction Documents

No additional requirements

11 ROADWAYS

11.1 General Requirements

No additional requirements

11.2 Design Requirements

Supplement the following to Section 11.2 of Volume 3

Design Criteria Order of Precedence

The following requirements shall be adhered to for the design of the Project. The plans provided in the Reference Information Documents are provided for reference only and may contain or conform to some but not all of the design requirements herein. In the event of any conflict, ambiguity or inconsistency, among the following design criteria, the order of precedence, from highest to lowest, one being higher than two, shall be as follows:

1. Allowable Design Exception(s)/Variance(s) as set forth in Section 11.2.3
2. Select Design Criteria as set forth in Volume 2, Section 11.2
3. Volume 2 and Volume 2 Attachments (Technical Provisions)
4. Volume 3 and Volume 3 Attachments (Programmatic Technical Provisions)
5. Volume 3 Manuals (Technical Documents)

11.2.1 Typical Section(s) and Pavement Design

Table 11-1: Typical Section(s) for Roadway Design

Roadway	Number of Lane(s)	Lane Width(s)	Median Width(s)	Inside/Outside Shoulder Width(s)
Riverside Drive	2	10’-12’	N/A	In: N/A Out: 10’
I-285 Ramps	Varies from 1-2	16’ single lane, 12’ multilane	N/A	In: 10’ w/ C&G Out: 9’/6’ Paved

Roundabout Design:

The roundabouts at the intersections at the I-285 at Riverside Drive eastbound and westbound ramp termini must meet the dimension and configuration shown in the Costing Plans Package or the DB Team will be required to submit a new Roundabout design for peer review by one of approved Peer Reviewers below:

- **Kittleson & Associates,** Justin Bansen, (407) 373-1104, jbanson@kittelson.com or Lee Rodegerdts, lrodegerfts@kittelson.com
- **GHD Engineering**, Mark Lenters, (608) 249-4545, Mark.Lenters@ghd.com or Troy Pankratz, Troy.Pankratz@ghd.com
- **Roundabout & Traffic Engineering,** Scott Ritchie, (928) 284-0295 scott@roundabouts.us
- **MTJ Engineering**, Mark Johnson, (608) 238-5000, mark@mtjengineering.com

Any changes or recommendations from the peer review must be incorporated into the Final Design and Construction as part of the total design and construction cost. Roundabout design must be based on the following requirements at a minimum:

a. Inscribed diameter of 120 feet.

b. Accommodate WB-67 design vehicle.

c. One lane roundabout with an additional lane serving as a right turn lane on all approaches but the bridge approach.

Pavement Design:

All pavement constructed on the project shall be in accordance with the approved pavement design as shown in Table 11-2. The approved flexible pavement design shall be used for Riverside Drive and when widening asphalt topped roadways. The approved rigid pavement design shall be used for all remove and replacement of I-285 ramps and when widening concrete ramps.

Table 11-2: Pavement Design(s)

Riverside Drive – Full Depth Flexible Pavement	
Material	**Spread Rate**
RECYCLED ASPH CONC 12.5 mm SUPERPAVE, TYPE II, GP 2 ONLY, INCL BITUM MATL & H LIME	165 LB/SY
RECYCLED ASPH CONC 19 mm SUPERPAVE, GP1 OR 2, INCL MATL & H LIME	220 LB/SY
RECYCLED ASPH CONC 25 mm SUPERPAVE, GP 1 OR 2, INCL MATL & H LIME	770 LB/SY
GRADED AGGREGATE BASE - 12” DEPTH	N/A

I-285 Ramp – Full Depth Rigid Design

Material	Spread Rate
JPCP = JOINTED PORTLAND CEMENT CONCRETE PAVEMENT – 9” THICK	N/A
RECYCLED ASPH CONC 19 mm SUPERPAVE, GP 1 OR 2, INCL MATL & H LIME	330 LB/SY
GRADED AGGREGATE BASE - 10” DEPTH	N/A

Reconstruct impacted driveways based on the following requirements:

1. Pave all driveways to Right-of-Way line, unless otherwise approved by GDOT.

2. Replace all driveways with in kind material. Non paved driveways shall be asphalt unless otherwise approved by GDOT. The driveway locations indicated on the plans are from the best available data. Construct new driveways to match the actual field location of existing driveways where they are not in conflict with the GDOT Driveway and Encroachment Control Manual.

3. Obtain the approval of the Engineer prior to making any revisions such as to location, width and/or number of driveways to be constructed.

4. Driveways shall be paved as shown in Table 11-3.

Table 11-3: Driveway Pavement Design(s)

Material	Spread Rate
Residential Asphaltic Concrete Driveways	
RECYCLED ASPH CONC 12.5 mm SUPERPAVE, GP 2 ONLY, INCL BITUM MATL & H LIME	165 lb/sy
GRADED AGGREGATE BASE COURSE – 6 INCH DEPTH INCL MATL	N/A
Commercial Asphaltic Concrete Driveways	
RECYCLED ASPH CONC 9.5 mm SUPERPAVE, GP 2 ONLY, INCL BITUM MATL & H LIME	165 lb/sy
RECYCLED ASPH CONC 19 mm SUPERPAVE, GP 1 OR 2, INCL BITUM MATL & H LIME	220 lb/sy
GRADED AGGREGATE BASE COURSE – 6 INCH DEPTH INCL MATL	N/A
Residential Concrete Driveways	
PORTLAND CEMENT CONCRETE – 6”	N/A

Material	Spread Rate
GRADED AGGREGATE BASE – 6" DEPTH	N/A
Commercial Concrete Driveways	
PORTLAND CEMENT CONCRETE – 8"	N/A
GRADED AGGREGATE BASE – 10" DEPTH	N/A

11.2.2 Additional Roadway Design Requirements

Table 11-4: Additional Design Criteria For Design-Build Project

Roadway	Functional Classification	Minimum Design Speed, mph	Maximum Grades, %	Superelevation Rate, %
Riverside Drive	**Urban Minor Arterial Street**	35	9.56%	4%
I-285 Ramp	**Interstate**	45	6.0122%	6%

1. Construct a shared driveway for Parcels 2 and 3 in accordance with the latest right-of-way plans.

11.2.3 Allowable Design Exception(s)/Variance(s)

The follow Design Variances have been approved by the Department:

Access Control: *Several existing driveways and a side road (Coldstream Court) are present along Riverside Drive within the 300 foot minimum standard for access control for an interchange. These driveways and side road would need to be maintained or reconstructed in order to provide access to the parcels adjacent to the interchange.*

11.2.4 Visual Quality

No additional requirements

11.2.5 Permanent Lighting

The DB Team shall conduct and get approved a photometric analysis of proposed lighting. The lighting design specifications and guidelines are as follows:
Install roadway LED lighting in the project limits. Use the following roadway lighting for fixtures, brackets, and poles or Department approved equal:

LUMEC Fixture: DMS50-135W80LED4K-ES-LE3F-VOLT-GN8TX
LUMEC Bracket: NM-1A-GN8TX
LUMEC Pole: RSS61V-28-GN8TX

Install roundabout LED lighting with a 15 foot mounting height and meet the requirements shown below. Ensure roundabout lighting meets current IESNA lighting standard for fully shielded fixtures. Roundabout lighting must extend to circulatory roadway, crosswalks, and to the splitter islands. Use the following roundabout lighting for fixtures, brackets, and poles or Department approved equal:

LUMEC Fixture: DMS50-70W64LED4K-ES-LE3S-120-GN8TX
LUMEC Bracket: LM-1A-GN8TX
LUMEC Pole: RA61U-15-GN8TX

The design shall ensure a light loss factor of 0.~~7~~ 8 (~~70~~80%) for LED lighting as well as coordinate power service for all lights with the appropriate power company. Wiring for lighting across the bridge from the power source for the adjacent roundabout shall be tied to a single metered base.

For each roundabout leg that directs traffic from or towards the bridge over I-285, provide lighting at each end of the bridge to achieve as much of the 260' roundabout transition lighting as required in DG-19-08.

11.2.6 Related Transportation Facilities

No additional requirements

11.3 Deliverables

No additional requirements

12 DRAINAGE

12.1 General Requirements

No additional requirements

12.2 Administrative Requirements

12.2.1 Data Collection

No additional requirements

12.2.2 Coordination with Other Agencies

No additional requirements

12.3 Design Requirements

No additional requirements

12.3.1 Surface Hydrology

No additional requirements

12.3.1.1 Design Frequencies

No additional requirements

12.3.1.2 Hydrologic Analysis

No additional requirements

12.3.2 Storm Sewer Systems

No additional requirements

12.3.2.1 Pipes

No additional requirements

12.3.2.2 Municipal Separate Storm Sewer System (MS4)

No additional requirements

12.3.2.3 Gutter Spread/Ponding

No additional requirements

12.3.3 Hydraulic Structures (Culverts/Bridges)

No additional requirements

12.3.3.1 Method Used to Estimate Flows

No additional requirements

12.3.3.2 Design Frequency

No additional requirements

12.3.3.3 Hydraulic Analysis

No additional requirements

12.3.3.4 Riverine Bridge/Bridge Culvert Design

No additional requirements

12.3.3.5 Bridge Deck Drainage

No additional requirements

12.3.3.6 Drainage Report for Hydraulic Structures

No additional requirements

12.4 Construction Requirements

No additional requirements

12.5 Deliverables

No additional requirements

13 STRUCTURES

13.1 General Requirements

No additional requirements

13.2 Design Requirements

13.2.1 Design Parameters

No additional requirements

13.2.2 Bridge Decks and Superstructures

No additional requirements

13.2.3 Bridge/ Retaining Wall Foundations

No additional requirements

13.2.4 Bridge Railing and Barriers

No additional requirements

13.2.5 Retaining Walls

No additional requirements

13.2.6 Aesthetics

No additional requirements

13.2.7 Drainage Structures

No additional requirements

13.2.8 Sign, Illumination, and Traffic Signal Supports

No additional requirements

13.2.9 Widening/Modification of Existing Structure

Over the span of two (2) 56-hour weekend periods the following bridge maintenance and approach items shall be completed by the DB Team:

<u>Deck</u>

- Seal deck by using a two-part polymer system.

Joints

- Replace the joints at Bent 2, Abutment 1 and Abutment 5. Seal the joints as bent 2 and abutment 5 with a preformed silicone joint.
- Reseal all construction joints.

Substructure

Concrete Spalls shall be repaired at all locations. Know locations are as follows however a site inspection is required for bidding purposes:

- Bent 3, Forward Face Cap: Approximately 2 square feet
- Bent 4, Bottom of Cap: Approximately 6 square feet
- Abutment 5: Approximately 8 square feet

Approach

- Any required approach work due to the construction of the roundabouts

13.2.10 Toll Gantry Structures

No additional requirements

13.3 Construction Requirements

No additional requirements

13.3.1 Concrete Finishes

No additional requirements

13.3.2 Structure Metals

No additional requirements

13.4 Final Bridge Inspection Prior to Service Commencement

No additional requirements

13.5 Deliverables

No additional requirements

14 RESERVED

15 LANDSCAPE AND HARDSCAPE ENHANCEMENTS

15.1 General Requirements

The DB Team shall include an allowance in the amount of **$437,000.00** for the design and construction of landscape and hardscape elements as identified in the City of Sandy Springs MOU. Refer to applicable sections of the DB Agreement for other related requirements which include, but are not limited to the maintenance of landscaping as specified in Standard Specification 702, lighting, grading, and grassing. The DB Team will facilitate a meeting with GDOT and the City of Sandy Springs within 45 days of issuance of NTP 1 to the discuss parameters of landscape and hardscape elements as identified in the MOU. Within 30 days of the said meeting with GDOT and the City of Sandy Springs, the DB Team will submit to GDOT for review a separate Schedule of Values for the landscape and hardscape elements. The Department and the DB Team will negotiate in good faith to achieve the intent of the MOU at or below the maximum stated allowance. The DB Team will submit a final landscaping plan at or before the time of the DB Team's submittal of final plans to GDOT.

The separate Schedule of Values shall include the following information at a minimum. The DB Team shall provide additional information upon request by GDOT.

- DESIGN COMPLETE
- CONSTRUCTION COMPLETE
  - Type of plants, unit price, number of plants
  - Type of trees, unit price, number of trees
  - Type of hardscape, unit price, area

No additional time will be granted for the DB Team to incorporate landscape and hardscape elements as identified in the City of Sandy Springs MOU.~~*No additional requirements*~~

15.2 Administrative Requirements

15.2.1 Design Requirements

No additional requirements

15.2.1 Reserved

15.2.2 Personnel

No additional requirements

15.3 Design Requirements

No additional requirements

15.3.1 Landscape and Hardscape Enhancement Principles and Strategies

No additional requirements

15.3.2 Reserved

15.3.3 Reserved

15.3.4 Trees, Shrubs, and Other Plant Materials

Roundabout landscaping required by the project shall meet the City of Sandy Springs Overlay Requirements. Landscape Concept Plans will be provided in the Reference Information Documents. Coordination and acceptance of landscaping design and plant materials by GDOT and the City of Sandy Springs will be required by the DB Team..

15.3.5 Reversed

15.3.6 Reserved

15.4 Construction Requirements

No additional requirements

15.5 Deliverables

No additional requirements

16 SIGNING, PAVEMENT MARKING, SIGNALIZATION

16.1 General Requirements

Signing and Pavement Marking must match the existing conditions upon completion of the project.

16.2 Administrative Requirements

16.2.1 Meetings

No additional requirements

16.3 Design Requirements

16.3.1 Final Plans

No additional requirements

16.3.2 Permanent Signing and Delineation

DB Team shall install vehicle detection at the stop bar of Coldstream Court to alert traffic on Northbound Riverside Drive that a vehicle is attempting to pull out. The warning detection system at a minimum shall have a yellow warning sign and two (2) flashing yellow warning lights when activated. Signage installation shall be consistent with MUTCD guidelines.

16.3.3 Project Signs – Outside the Existing and Proposed ROW

No additional requirements

16.3.4 Reserved

16.3.5 Specific Service Signs

No additional requirements

16.3.6 Sign Support Structures

No additional requirements

16.3.7 Permanent Pavement Marking

No additional requirements

16.3.8 Permanent Signalization

DB Team shall coordinate with the City of Sandy Springs to optimize the signal timing at the intersection of Heards Ferry Road and Riverside Drive once the roundabout is in operation. Additionally, the DB Team is responsible for the installation of a queue detector on Riverside Drive that will flush the traffic on Northbound Riverside Drive queued at the Heards Ferry Road signal when it reaches the proposed roundabout. Equipment installed must be coordinated with the City of Sandy Springs to insure that new equipment is comparable to the existing equipment in the City of Sandy Springs.

16.3.8.1 Traffic Signal Requirements

No additional requirements

16.3.8.2 Traffic Signal Timing Plans

No additional requirements

16.3.8.3 Traffic Signal Permit

No additional requirements

16.3.8.4 Traffic Signal Support Structures

No additional requirements

16.4 Construction Requirements

16.4.1 Permanent Signing and Delineation

No additional requirements

16.4.2 Permanent Pavement Marking

No additional requirements

16.4.3 Permanent Signalization

No additional requirements

16.5 Deliverables

16.5.1 Permanent Signing and Delineation

No additional requirements

16.5.2 Permanent Pavement Marking

No additional requirements

16.5.3 Permanent Signalization

No additional requirements

17 INTELLIGENT TRANSPORATION SYSTEMS

17.1 General Description

17.1.1 General Purpose

No additional requirements

17.1.2 Reserved

17.1.3 Transportation Management Center (TMC) Improvements

No additional requirements

17.2 Design and Construction Requirements

No additional requirements

17.3 Testing and Acceptance

No additional requirements

17.3.1 End-To-End Testing

No additional requirements

17.4 Warranty

17.4.1 Protection of Existing ITS Signalization

During the construction of the roundabouts the ramp meters can be out of service for a period of 30 days. Disconnection of the ramp meters shall be coordinated with the Traffic Management Center.

17.4.1.1 ITS Maintenance and Repair Plan

No additional requirements

17.4.1.2 ITS Locates

No additional requirements

17.4.1.3 ITS Preventative Maintenance

No additional requirements

17.4.1.4 ITS Repair and Replacement

No additional requirements

18 TRAFFIC CONTROL

18.1 General Requirements

All ITS equipment shall be relocated to or installed at proposed locations prior to roadway construction beginning. This is necessary for maintenance of traffic and emergence response during construction.

18.2 Administrative Requirements

18.2.1 Transportation Management Plan

No additional requirements

18.3 Design Requirements

18.3.1 Traffic Control Plans

Temporary signals may be required at intersections of Riverside Drive and the I-285 Ramps during the construction of the roundabouts depending on the DB Team's staging plan. Signalization at both intersections shall remain in operation until traffic is transitioned to the roundabouts.

18.3.1.1 Roadway Guidelines

No additional requirements

18.3.1.1.1 Design Parameters for Traffic Control

No additional requirements

18.3.1.1.2 Allowable Shoulder/Lane/Roadway Closures and Traffic Stage Changes

Supplement Lane and Shoulder Closure During Design-Build Period Section of Volume 3 with the following:

1. Bridge Maintenance and Approach Work Periods

   The Two (2) 56-hour Bridge Maintenance and Approach Work Periods must take place between the hours of 9:00 P.M on Friday and 5:00 A.M on Monday. A complete closure of Riverside Drive between the ramps will be allowed during the Bridge Maintenance and Approach Work Period. Ramps are to remain open during this period. During the Bridge Maintenance and Approach Work Period the DB Team must complete all Bridge Maintenance work and any required approach work due to the construction of the roundabouts. During the Bridge Maintenance and Approach Work Period the DB Team must comply with all other traffic control requirements.

2. Riverside Drive

A minimum of 1 travel lane shall remain open to the travelling public at all times except during the Bridge Maintenance Period.

Lane and shoulder closures will NOT be allowed between the following hours:

Day	Southbound Lanes	Northbound Lanes
Monday through Friday	5:00 a.m. to 9:00 p.m. daily	5:00 a.m. to 9:00 p.m. daily
Saturday	10:00 a.m. to 8:00 p.m.	10:00 a.m. to 8:00 p.m.
Sunday	10:00 a.m. to 8:00 p.m.	10:00 a.m. to 8:00 p.m.

3. I-285

A minimum of 4 travel lanes in each direction shall remain open to the travelling public at all times.

Lane and shoulder closures will NOT be allowed between the following hours:

Day	Eastbound Lanes	Westbound Lanes
Monday through Friday	5:00 a.m. to 9:00 p.m. daily	5:00 a.m. to 9:00 p.m. daily
Saturday	10:00 a.m. to 8:00 p.m.	10:00 a.m. to 8:00 p.m.
Sunday	10:00 a.m. to 8:00 p.m.	10:00 a.m. to 8:00 p.m.

All Other Roads and Streets/Ramps/Collector Distributor Lanes

A minimum of one (1) travel lane in each direction shall remain open for all ramps and collector distributor lanes. No ramps or side streets will be allowed to be closed unless approved by GDOT. The DB Team shall not install lane closures, perform flagging, or move equipment on the travel way on any day between the hours of 5:30 a.m. to 9:30 a.m. and from 4 p.m. and 7 p.m. The DB Team shall coordinate with GDOT and each Local Government Agency having jurisdiction to determine acceptable times for closure to occur.

1. Long term shoulder closures will be allowed on one shoulder with GDOT approval in areas where there is an inside and an outside shoulder. The shoulder opposite of the closed shoulder shall have a minimum width of eight (8) feet. Shoulder closure will be allowed for a maximum of one hundred

eighty (180) days and a maximum distance of one (1) mile. There should be at least one (1) mile between long term shoulder closures. Long term shoulder closure is defined as any shoulder closure lasting longer than times allowed in section this section.

18.4 Construction Requirements

18.4.1 DB Team Responsibility

No additional requirements

18.4.2 Access

No additional requirements

18.4.3 Detours

DB Team shall coordinate with GDOT, adjacent Governmental Entities and other third parties as appropriate to plan and implement the detour.

19 MAINTENANCE DURING THE DESIGN-BUILD PERIOD

19.1 General Requirements

19.1.1 Reserved

19.1.2 GDOT Obligation to Repair

No additional requirements

19.2 Construction Maintenance Limits Plan

No additional requirements

20 BICYCLE AND PEDESTRIAN FACILITIES

20.1 General Requirements

Supplement Section 20.1 of Volume 3 with the following:

The DB Team shall ensure the bicycle and pedestrian facilities of the Project adhere to the following guidance documents:

- Georgia Guidebook for Pedestrian Planning
- GDOT Pedestrian and Streetscape Guide
- Georgia DOT Bike/Ped Design Policy
- AASHTO Bicycle and Pedestrian Design Guidelines

Bicycle and pedestrian planning and design documents can be found on the GDOT Bicycle and Pedestrian Programs website:

http://www.dot.ga.gov/travelingingeorgia/bikepedestrian/Pages/PlanningandDesignResources.aspx

20.2 Design Requirements

20.2.1 Bicycle Facilities

No additional requirements

20.2.2 Pedestrian Facilities

The DB Team shall design and install a 5 foot wide sidewalk on both the East and West side of Riverside Drive and tie the proposed sidewalk to the existing sidewalk on the bridge.

20.2.3 Final Plans

No additional requirements

21 RESERVED

22 SOUND BARRIERS

22.1 General

Any impacted sound barriers shall be replaced in kind. The proposed sound barriers shall not only meet the required noise requirements specified in the NEPA Document but also provide an equal or better visual screen for the adjacent properties.

23 SUBMITTALS

23.1 General

No additional requirement

23.2 Design Submittals and Progress of Design Work

The DB Team shall provide Project Submittals detailed in Table 23-1: Master Submittal List below. Each required Submittal shall be delivered to GDOT in conformance of the review times provided below. The times provided are specifically for the review period required for GDOT to comment and GDOT to subsequently accept if all requirements of the DB Documents are met. Accuracy, completeness, and time spent to address GDOT comments are the responsibility of the DB Team. Not all submittals listed in Table 23-1 may be required for the Project and some submittals may be combined into a single submittal such as the management plans; DB Team shall coordinating with GDOT in determining if submittals may be omitted or combined

ABBREVIATIONS FOR TABLE

ASC	Point File for Survey Data
AR	As Required
DTM	Digital Terrain Model
FS	Full-size paper – meets GDOT Plan Presentation Guide
HC	Hard Copy – 8 ½ x 11 unless otherwise noted
HS	Half-size paper – meets GDOT Plan Presentation Guide
MP	Microsoft Project
MS	MicroStation File – Electronic
NTP	Notice to Proceed
P6	Primavera P6
PAS	Per Approved Schedule
PDF	Adobe PDF – One complete file and individual plan sheet files meets GDOT Electronic Plans Process

Table 23-1: Master Submittal List

Section	Volume	Submittal Item	Format	Quantity	Delivery Date	Review Period* (Days)
Volume 1						
EXB 1	1	Schedule of Values	AR, PDF	1	Within 15 Days from NTP 1	14
Volume 3						
2	3	Schematic Plan of Project	AR, PDF	1	At time of proposal submission	NA
23	3	Construction Phasing Plan	AR, PDF	1	Within 30 Days from NTP 1	30
23	3	Submittal Schedule	AR, P6, PDF	1	Within 30 Days from NTP 1	30
23	3	Design Submittal Guide / Index	AR, PDF	1	Prior to first design submittal	14
23	3	Updates to Design Submittal Guide / Index	AR, PDF	1	Updates required with subsequent submittals	14
2	3	Interim (optional) Design Submittal(s)	AR, PDF	1	Per approved Submittal Schedule	14
23	3	Design and Construction Quality Records	AR, PDF	1	Always auditable; Submit at project completion	NA
23	3	Design Review meeting minutes	AR, PDF	1	within 7 days of Design Review meetings	7
Management Plans						
2	**3**	**Project Management Plan and any updates**	**AR, PDF**	**1**	**See Section 2 of Volume 3**	**60**
2	3	Design Quality Management Plan	AR, PDF	1	Within 30 Days from NTP 1	30
2	3	Construction Quality Management Plan	AR, PDF	1	See Section 2 of Volume 3	30
2	3	Safety Plan	AR, PDF	1	See Section 2 of Volume 3	30
2	3	Quality Management Plan	AR, PDF	1	Within 30 Days from NTP 1	30
2	3	Monthly Status Reports (includes cost, schedule, quality, status, etc.)	AR, PDF	1	Monthly	NA
2	3	DB Team Internal Quality Audits	AR, PDF	1	As needed	NA
2	3	DB Team Non-Conformance Reports	AR, PDF	1	As needed	NA
~~3~~	~~3~~	~~GDOT-DB Team Communications Plan~~	~~AR, PDF~~	~~1~~	~~Within 30 Days from NTP 1~~	~~30~~
~~3~~	~~3~~	~~DB Team Input for Public Information and Communications Plan (PICP)~~	~~AR, PDF~~	~~1~~	~~within 10 Days of Receipt from GDOT~~	~~14~~

Section	Volume	Submittal Item	Format	Quantity	Delivery Date	Review Period* (Days)
~~3~~	~~3~~	~~DB Team Reviews of Public Information Materials~~	~~AR, PDF~~	~~1~~	~~As needed~~	~~14~~
~~3~~	~~3~~	~~Public Information and Communication Report~~	~~AR, PDF~~	~~1~~	~~Monthly~~	~~NA~~
~~3~~	~~3~~	~~Development Assistance for Project -Related Information for Project Website~~	~~AR, PDF~~	~~1~~	~~As needed~~	~~NA~~
Schedules						
2	3	Preliminary Baseline Schedule	AR, P6, PDF	1, 3, 1	With Proposal	14
2	3	Project Baseline Schedule	AR, P6, PDF	3, 1, 1	Within 30 Days from NTP 1	30
2	3	Revisions to Project Baseline Schedule	AR, P6, PDF	3, 1, 1	Monthly or as required	14
2	3	Monthly Status Schedule Update	AR, HS, PDF	1	Monthly	14
2	3	Monthly Time Scaled Network Diagrams	AR, HS, PDF	1	Monthly	14
Existing Infrastructure						
~~2~~19	3	Construction Maintenance Limits Plan	AR, PDF	1	Within 150 Days from NTP 1	30
2	3	Pre-Construction Photos and Videos	AR, PDF	1	Within 180 Days from NTP 1, prior to construction	30
Environmental						
4	3	GDOT - Led Governmental Approvals	AR, PDF	1	As needed, per the approved Submittal Schedule	Table 4-1
4	3	UST and Hazardous Waste Site Investigation Report	AR, PDF	1	See Section 4 of Volume 3	30
4	3	Applications to Regulatory Agencies, Application revisions, supplements	AR, PDF	1	As needed	***
Utilities						
6	3	Supplemental verification of Overhead/Subsurface Utility Engineering (SUE) Investigations - QL-B	AR, MS PDF	1	NTP (1) + 45 Calendar Days (Or as Determined by State Subsurface Utilities Engineer at the SUE Kick-Off meeting which is concurrent with the first utility coordination meeting)	NA

Section	Volume	Submittal Item	Format	Quantity	Delivery Date	Review Period* (Days)
6	3	SUE Utility Impact Analysis "UIA"	AR, PDF	1	NTP 1 + 120 Calendar Days (Or as Determined by State Subsurface Utilities Engineer at the SUE Kick-Off meeting which is concurrent with the first utility coordination meeting)	NA
6	3	Overhead/Subsurface Utility Engineering (SUE) Investigations - QL-A	AR,MS,PDF	Plans: 2 for each Utility Owner +3 for Dept. and MS files	UIA + 45 Calendar Days	NA
6	3	Overhead/Subsurface Utilities Engineering (SUE) Information to Utilities for Review (URPN Letter 1a - SUE Submit to Utility Companies Revise)	FS,HS,PDF, MS	Plans: 2 for each Utility Owner +3 for Dept. and MS files	NTP 1 + 5 Calendar Days (Or as Determined by District Utilities Engineer at SUE Kick-Off meeting)	5 days for Dept. + 30 days for each Utility Owner
6	3	Relocated Utility Plans (URPN Letter 2 - 2nd Submission Letter (Existing and Proposed))	FS,HS,PDF, MS	3, 1	Concurrently w/ Accepted SUE Verification by Utility Owner	5 days for Dept. + 90 days for each Utility Owner
6	3	Utility Retention Request	AR, PDF	1	As needed	14

Section	Volume	Submittal Item	Format	Quantity	Delivery Date	Review Period* (Days)
6	3	Preliminary Utility Status Report (URPN Letter 6 - Notice to Proceed with Permit)	HC, PDF	Agreements: 3 hard copy, 1 electronic pdf Plans: 2 for each Utility Owner + 3 for Dept. and MS files	NTP 1 + 180 Days Concurrently w/ Accepted Relocated Utility Plans	10- days + 5 days
6	3	Utility Plans/Agreements (Utility NTP Letter)	Plans/ Agreements HS,PDF,MS	1, 3, 1, 1		Agreements : 30 days for Dept. + 60 days for each Utility Owner Plans: 30 days
6	3	Utility A/O Claims of Real Property Interests	AR, PDF	1	See Section 6 of Volume 3	14
6	3	Utility Adjustment Field Modification Procedure	AR, PDF	1	Prior to submittal of any Utility Work Plan	14
6	3	Utility As-Built Plans	FS, HS, PDF, MS	1	Concurrently w/Accepted Construction As-Built Plans	Plans: 30 days Department 30 days for Utility Owners
6	3	All Utility Meeting Minutes	AR, PDF	1	Within 7 days of Utility Meeting	7

Section	Volume	Submittal Item	Format	Quantity	Delivery Date	Review Period* (Days)
Geotechnical						
8	3	Geotechnical Reports	AR, PDF	1	See Section 8 of Volume 3	30
8	3	Soils Reports	AR, PDF	1	See Section 8 of Volume 3	30
8	3	Blasting Plan	AR, PDF	1	As needed	30
Survey						
9	3	Survey Control Package	AR, ASC, PDF	1	Per the approved Submittal Schedule	30
9	3	Property Owner Notification Letters	AR, PDF	1	As needed	10
9	3	Bound Field Notes	AR, PDF	1	Prior to Project Completion	14
9	3	Topographic Mapping	AR, DTM, PDF	1	See Section 9 of Volume 3	14
Grading/Roadway						
10, 11	3	Preliminary Grading/Roadway Plans (60%)	AR, PDF	1	Per the approved Submittal Schedule	14
10, 11	3	Final Grading/Roadway Plans (100%)	AR, PDF	1	Per the approved Submittal Schedule	14
11	3	Vibration Control Plan	AR, PDF	1	See Section 11 of Volume 3	14
Lighting/Electric/Power						
11,17,21	3	Preliminary Lighting/Electrical Plans (60%)	AR, PDF	1	Per the approved Submittal Schedule	14
11,17,21	3	Final Lighting/Electrical Plans (100%)	AR, PDF	1	Per the approved Submittal Schedule	14
11	3	Lighting Inventory Information	AR, PDF	1	See Section 11 of Volume 3	30
11	3	Lighting Studies / Calculations	AR, PDF	1	See Section 11 of Volume 3	30
11,17,21	3	Electrical Power Calculations	AR, PDF	1	See Section 17 of Volume 3	14
11,17,21	3	Electrical Design Voltage Drop Calculations	AR, PDF	1	See Section 17 of Volume 3	14
Drainage						
12	3	Drainage Design Report (Phased)	AR, PDF	1	Per the approved Submittal Schedule	30
12	2	Storm Sewer Drainage Report(s)	AR, PDF	1	Per the approved Submittal Schedule	14
Structures/Bridges						
13	3	Preliminary Bridge Layouts	AR, FS, HS, PDF	2, 6, 1	**	14

Section	Volume	Submittal Item	Format	Quantity	Delivery Date	Review Period* (Days)
13	3	Preliminary Wall Layouts	AR, FS, HS, PDF	2, 6, 1	**	14
13	**3**	**Final Bridge Plans**	AR, FS, HS, PDF	2, 6, 1	**	**30**
13	**3**	**Final Wall Plans**	AR, FS, HS, PDF	2, 6, 1	**	**30**
Signing, Pavement Marking and Signalization						
16	**3**	**Preliminary Signing & Marking, Signal Plans (per phase)**	AR, FS, HS, PDF	2, 6, 1	**Per the approved Submittal Schedule**	**45**
16	**3**	**Final Signing & Marking, Signal Plans**	AR, FS, HS, PDF	2, 6, 1	**Per the approved Submittal Schedule**	**45**
ITS						
17	3	Preliminary ITS Plans	AR, FS, HS, PDF	2, 6, 1	Per the approved Submittal Schedule	30
17	3	Final ITS Plans	AR, FS, HS, PDF	2, 6, 1	Per the approved Submittal Schedule	30
17	3	Final As-Builts	AR, FS, HS, PDF	2, 6, 1	30 Days After to Substantial Completion	60
17	3	Manufacturer Equipment Documentation/Manufacturer Warranties	AR, PDF	1	256 Days prior to Substantial Completion	14
Traffic Control						
18	3	Traffic Management Plan	AR, PDF	1	Within 120 Days from NTP 1	30
18	3	Traffic Control Plans (each Phase)	AR, PDF	1	Per the approved Submittal Schedule	14
Maintenance During the Construction Period						
2,23	3	Construction Limits Maintenance Phasing Plan	AR, FS, HS, PDF	2, 6, 1	Prior to given Phase, approval before construction	14
Additional Submittals						
23	**3**	**Preliminary Plans (60%) (complete set)**	**AR, FS, HS, PDF**	**6, 10, 1**	**	**45**

Section	Volume	Submittal Item	Format	Quantity	Delivery Date	Review Period* (Days)
23	**3**	**Interim Design**	**AR, FS, HS, PDF**	**6, 10, 1**	******	**30**
23	**3**	**Final Plans (100%) per Construction Phase (complete set)**	**AR, FS, HS, PDF**	**6, 10, 1**	******	**45**
23	3	Notice of Intent (NOI) with final/signed Erosion Control Plans	AR, PDF	1	**	14
23	3	WFI (Wall Foundation Investigation)	AR, PDF	1	**	14
23	3	Shop Drawings	AR, PDF	1	**	14
23	3	Plan Revisions During Construction	AR, PDF	1	**	14
23	3	Record Drawings (As-Built Plans) per Construction Phase	AR, FS, HS, PDF	6, 10, 1	**	14
23	3	Drainage Plans	AR, FS, HS, PDF	2, 6, 1	**	30
23	3	Pavement Joints and Elevations	AR, PDF	1	**	14
23	3	Grading Plans	AR, FS, HS, PDF	2, 6, 1	**	14
23	3	Landscaping Plans	AR, FS, HS, PDF	2, 6, 1	**	14
23	3	Intersection Design Studies	AR, PDF	1	**	14
23	3	Photo Metrics Plan	AR, FS, HS, PDF	2, 6, 1	**	30
23	3	Draft Design Specifications, Reports, Whitepapers,etc.	AR, PDF	1	**	14
23	3	FinalDesign Specifications, Reports, Whitepapers,etc.	AR, PDF	1	**	14
All	All	Meeting Minutes	AR, PDF	1		14

*Review period is the period required for the generation of comments or the review time to determine the sufficiency of the document and the state or status of the document per Section 23.3. Multiple review periods shall be planned for "Accepted by GDOT " status.

If a submittal is not listed the review time shall be 30 days.

** Based upon the approved Submittal Schedule per approved Construction Phasing plan
*** Time of review will be based upon actual impact to project
**** See Technical Provisions
~~**BOLDED and Italicized = requires FHWA review and approval**~~

ABBREVIATIONS TABLE	
ASC	Point File for Survey Data
AR	As Required
DTM	Digital Terrain Model
FS	Full-size paper – meets GDOT Plan Presentation Guide
HC	Hard Copy – 8 ½ x 11 unless otherwise noted
HS	Half-size paper – meets GDOT Plan Presentation Guide
MP	Microsoft Project
MS	MicroStation File – Electronic
NTP	Notice to Proceed
P6	Primavera P6
PAS	Per Approved Schedule
PDF	Adobe PDF – One complete file and individual plan sheet files meets GDOT Electronic Plans Process

23.2.1 Construction Phasing and Additional Submittal Requirements

No additional requirement

23.3 Submittals Process

No additional requirement

23.4 Shop Drawings and Temporary Work Submittals

No additional requirement

23.4.1 General

No additional requirement

23.4.2 Work Items Requiring Shop Drawings

No additional requirement

23.4.3 Schedule of Submittals

No additional requirement

23.4.4 Style, Numbering, and Material of Submittals

No additional requirement

23.4.5 Submittals and Copies

No additional requirements

23.4.6 Processing of Shop Drawings

No additional requirements

23.4.7 Other Requirements for Shop Drawings for Bridges

No additional requirements

23.4.8 Modifications on Construction

No additional requirements

23.5 As-Built Plans

No additional requirements

Georgia Department of Transportation
Technical Provisions

I-285 Ramps at CR 209/ Riverside Drive Project

P.I. No. 0010925

VOLUME 2 ATTACHMENTS

Technical Provision
For
Design Build Agreement

Georgia Department of Transportation
Programmatic Technical Provisions

I-285 Ramps at CR 209/ Riverside Drive Project

P.I. No. 0010925

Attachment 6-1

Utility Memorandums of Understanding for

1. Atlanta Gas and Light
2. AT&T
3. City of Atlanta Water Works
4. Comcast
5. Fulton County Sewer
6. Georgia Power
7. Level 3
8. Zayo

Georgia DOT Project: Riverside @ I-285 Roundabouts
GDOT P.I. # 0010925

DESIGN-BUILD
MEMORANDUM OF UNDERSTANDING
between the
Georgia Department of Transportation (hereafter the DEPARTMENT)
and
AGL Resources (hereafter the OWNER)

Whereas the DEPARTMENT proposes to undertake a design-build project hereafter referred to as PROJECT #0010925, Riverside @ in Fulton County, Georgia by contract through competitive bidding procedures; and,

Whereas the DEPARTMENT will accomplish the PROJECT through a Design Consultant, Design Consultant Team and/or Contractor hereafter referred to as CONTRACTOR; and,

Whereas, where OWNER has property rights ("Prior Rights") at the location of the PROJECT, OWNER will provide written evidence as to said prior rights within the area and will provide written documentation of prior rights relating to any individual crossing or Utility Facility, at the location of the PROJECT; and

Whereas, OWNER acknowledges that, generally, absent a showing of prior rights, the costs of relocation, protection, removal, or adjustment performed by OWNER shall be borne by OWNER; and

Whereas, pursuant to O.C.G.A. § 32-6-170(b), DEPARTMENT is authorized to pay or participate in the payment of the costs of relocation, protection, or adjustment of OWNER'S facilities where DEPARTMENT has made the determination that (i) such payments are in the best interest of the public and necessary in order to expedite the staging of the design-build project; and (ii) the costs of the removal, relocation, protection, or adjustment of such facilities are included as part of the Contract between the Department and the Department's roadway contractor for the design-build project; and

1. Type of Utility

OWNER has the following utility facilities which may need to be adjusted or relocated as a result of the proposed PROJECT:

Type of facility or facilities of OWNER:

Domestic water mains and distribution lines and associated appurtenances

Sanitary Sewer facilities and/or Storm Drainage System

Electrical Distribution (overhead and underground) wires, poles, etc.

Electrical Transmission (overhead and underground) wires, poles, etc.

X Natural Gas Distribution Facilities (underground)

Natural Gas Transmission Facilities (underground)

Petroleum Pipeline (underground)

Telecommunications facilities and equipment

Cable TV facilities

Street Lighting

Internet Data Service

Other Facilities (Description) _____

2. New Utility Facilities Proposed (Betterment)

OWNER desires the following to be installed as new additional facilities within the PROJECT. Insert here or attach a detailed description of proposed new additional utility installations:

N/A

_____

_____

3. Assignment of Responsibilities for Design and Construction

This MEMORANDUM OF UNDERSTANDING and the following shall serve as a *basis* for assignment of responsibilities and costs for the DEPARTMENT to enter into a Standard Utility Agreement (SUA) or Contract Item Agreement (CIA), if necessary, with OWNER once the PROJECT is awarded to the CONTRACTOR. For a PROJECT implementation, GDOT will not have in its possession exact costing plans to be utilized to determine exact locations of the removal, relocation, protection, or adjustment. However, Overhead/Subsurface Utility Engineering (SUE) investigations plans exist providing the best information and signifying the layout of known existing facilities. Please use these plans for developing the final determination of services as indicated below. The CONTRACTOR developed plans will be provided to the OWNER after the design build project is awarded by GDOT which shall be used by the CONTRACTOR as the final basis for the SUA or CIA. **Betterment costs will be the OWNER'S responsibility.**

NOTE: Water and Sewer Design and Construction relocation work put in the contract will automatically be accomplished by the DEPARTMENT'S CONTRACTOR. The UTILITY OWNER will still have design approval authority. (No Pre-Approved Contractor/Consultant List required, leave page 6 blank). If you are a Water & Sewer Utility and choose to put your relocation Design and Construction in the contract, please check Design and Construction under Option 2 under 3B. Owner's electing to perform their own design, at their own cost, please select design under 3C.

OWNER hereby intends to:

A. OWNER, at the DEPARTMENT'S cost, will provide the following services for the properties for which it has established prior rights (Check to signify):

Design

Construction

B. OWNER, at the DEPARTMENT'S cost, for any removal, relocation, protection, adjustment and/or design (Regardless of Prior Rights) will allow their facilities to be placed into the DEPARTMENT'S contract for the following services pursuant to O.C.G.A. § 32-6-170(b). The DEPARTMENT will add the removal, relocation, protection, adjustment and/or design cost to the overall PROJECT's cost. (Check to signify):

Option 1: OWNER wants the work to be performed by the OWNER's pre-approved Design Consultants and/or Contractors.

Design ✓

Construction ✓

Option 2: OWNER wants the DEPARTMENT'S CONTRACTOR to perform the design and/or construction. (Check to signify):

Design

Construction **If both are checked, please leave page 6 blank.**

As per this section, all work necessary for the removal, relocation, protection, or adjustment of the described utilities in accordance with the plans when approved shall be included in the project contract and accomplished by the CONTRACTOR except as follows (Check none or list any work items to be performed by the OWNER)

None

Excluded Items _____

Comments: A separate list of AGL operator qualified contractors will be provided with this document.

C. OWNER, at OWNER'S cost, will provide the following services (Check to signify):

Design

Construction

The following is hereby mutually agreed to and understood by both parties:

1. The identification of existing facilities including preparation of Overhead/Subsurface Utility Engineering (SUE) investigations plans will be accomplished by the DEPARTMENT prior to award of the PROJECT and thereafter supplemented by the CONTRACTOR.
2. The CONTRACTOR shall coordinate reviews of the utility relocation information and obtain acceptance from the OWNER and DEPARTMENT when required. However; the OWNER shall apply for and obtain any required permits from the DEPARTMENT and perform any final design or proprietary design needed to administer its own relocation work if the work will not be included in the contract. If the preliminary plans indicate that no conflict exists, and the OWNER concurs with this information, the OWNER shall provide a letter of "no conflict" to the CONTRACTOR.
3. After award of the PROJECT, the CONTRACTOR will research any claimed compensable property interest by each OWNER claiming prior rights under section 3A and present the findings to the DEPARTMENT and OWNER for approval. The plans and estimate for the utility work shall be subject to approval of both the DEPARTMENT and the OWNER prior to construction. If the OWNER chooses to perform it own relocations and the OWNER holds no property interest as stated above; the OWNER shall confirm in writing that the OWNER will relocate its own facilities at no cost to the DEPARTMENT or the CONTRACTOR.
4. All construction engineering and contract supervision shall be the responsibility of the DEPARTMENT and the CONTRACTOR to ensure that all utility work included in the contract is accomplished in accordance with the PROJECT's plans and specifications. The CONTRACTOR will consult with the OWNER before authorizing any changes or deviations which affect the OWNER's facility.
5. For utility work included in the contract, the CONTRACTOR shall ensure that the design/construction and installation of the OWNER'S facilities is performed by a contractor/design consultant pre-approved/registered with both the DEPARTMENT and the OWNER. For any work included in the contract, excluding water and sewer, the OWNER will provide a list of pre-approved/registered contractors/design consultants on page 6 of the MOU.
6. For Utility work included in the contract, the OWNER or the OWNER's Consultant shall have the right to visit and inspect the work at any time and advise the CONTRACTOR and the DEPARTMENT'S Engineer of any observed discrepancies or potential issues. The DEPARTMENT agrees to notify the OWNER when all utility work is completed and ready for final inspection by the OWNER.
7. Upon Maintenance Acceptance or Final Acceptance of the utility work included in the contract and upon certification by the DEPARTMENT'S Engineer and the OWNER that the work has been completed in accordance with the plans and specifications, the OWNER will accept the adjusted, relocated, and additional facilities and will thereafter operate and maintain said facilities located within the PROJECT right of way subject to the DEPARTMENT'S Utility Accommodations Policy and Standards Manual (UAM), current edition" and any agreements in effect without further cost to the DEPARTMENT or it's CONTRACTOR.
8. For the purpose of utility coordination, relocation and reimbursement matters, the OWNER shall cooperate with the CONTRACTOR in the same manner as if coordinating directly with the DEPARTMENT in accordance with the laws of the State of Georgia, the DEPARTMENT'S UAM and any agreements in effect between the DEPARTMENT and OWNER. The OWNER agrees to cooperate in good faith with the CONTRACTOR and to respond to all requests for information or meetings required to reach a resolution of any disputed items.

9. In accordance with the BUY AMERICA requirements of the Federal regulations (23 U.S.C. 313 and 23 CFR 635.410) all manufacturing processes for steel and iron products or predominantly of steel or iron (at least 90% steel or iron content) furnished for permanent incorporation into the work on this project shall occur in the United States. The only exception to this requirement is the production of pig iron and the processing, pelletizing and reduction of iron ore, which may occur in another country. Other than these exceptions, all melting, rolling, extruding, machining, bending, grinding, drilling, coating, etc. must occur in the United States.

    a. Products of steel include, but are not limited to, such products as structural steel piles, reinforcing steel, structural plate, steel culverts, guardrail, steel supports for signs, signals and luminaires, and cable wire/strand. Products of iron include, but are not limited to, such products as cast iron frames and grates and ductile iron pipe. Coatings include, but are not limited to, the applications of epoxy, galvanizing and paint. The coating material is not limited to this clause, only the application process.

    b. A Certificate of Compliance shall be furnished for steel and iron products as part of the backup information with the billing. The form for this certification entitled **"Buy America Certificate of Compliance"** is attached to this agreement as **"Exhibit A."** Records to be maintained by the RAILROAD/UTILITIES and the Department for this certification shall include a signed mill test report and/or a signed certification by a supplier, distributor, fabricator, or manufacturer that has handled the steel or iron product affirming that every process, including the application of a coating, performed on the steel or iron product has been carried out in the United States of America, except as allowed by this Section. The lack of these certifications will be justification for rejection of the steel and/or iron product or nonpayment of the work.

    c. The requirements of said law and regulations do not prevent the use of miscellaneous steel or iron components, subcomponents and hardware necessary to encase, assemble and construct the above products, manufactured products that are not predominantly steel or iron or a minimal use of foreign steel and iron materials if the cost of such materials used does not exceed one-tenth of one percent (0.1%) of the total contract price or $2,500.00, whichever is greater.

The Memorandum of Understanding will be incorporated into the project contract by reference or Exhibit.

APPROVED FOR THE OWNER BY:

Jesse W. Killings
(Signature)

Jesse Killings
(Printed Name)

VP, Operations
(Title)

June, 5, 2014
(Date)

APPROVED FOR THE DEPARTMENT BY:

Michael J. Belshe
(Signature)

6-12-14
(Date)

STATE UTILITIES ENGINEER

Pre-Approved Contractor List

Company Name: See attached list
Address:
Phone:
Contact Person:
E-Mail:

Company Name:
Address:
Phone:
Contact Person:
E-Mail:

Company Name:
Address:
Phone:
Contact Person:
E-Mail:

Please provide a minimum of three.

Pre-Approved Design Consultant List

Company Name: AMEC Environment & Infrastructure Inc.
Address: 2677 Buford Hwy NE, Atlanta, GA 30324
Phone: 1-404-817-0215
Contact Person: Bruce M. Bagnasco, PE
E-Mail: bruce.bagnasco@amec.com

Company Name: Pond Company
Address: 3500 Parkway Lane, Suite 600, Norcross, GA 30092
Phone: 1-648-336-7740
Contact Person: Brannen Butts, PE
E-Mail: buttsb@pondco.com

Company Name: Kimley-Horn and Associates, Inc.
Address: 817 Biltmore Dr NE, Atlanta, GA 30329
Phone: 1-757-548-7300
Contact Person: Erica Van Tassel Carter, P.E.
E-Mail: Erica.carter@kimley-horn.com

All Pre-Approved Contractors/Consultants listed above must be Registered/Prequalified with the Department – Contractors must fill out one original DOT Form 478 and provide three reference letters. Send all documents to the: Georgia Department of Transportation, Office of Transportation Services – Contractor Prequalification, 600 West Peachtree Street, NW, 19th Floor, Atlanta, GA 30308

Please refer to the Department's website @ (http://www.dot.ga.gov/doingbusiness/prequalification) and follow instructions for contractor Registration/Prequalification

Approved AGL Pipeline Contractors as of 3-25-13

Limitations	First Name	Last Name	Company Name	City	State	Title	Work Phone	WorkExtn	Email Name
No limitations	Kevin	Adams	Southeast Connections	Conyers	GA	VP Operations	404-659-1422	240	kadams@seconnections.com
Limited to 6" and smaller steel or plastic gas facilities	Walter	Thomas	Thomas Utility Contractors	Augusta	GA	Pres	706-737-0042		tuci@bellsouth.net
Limited to 12" and smaller for steel or plastic gas facilities	Bryan	Boyd	Gunter Construction Company, Inc.	Lawrenceville	Georgia	President	770-963-7760	201	bboyd@gunterconst.com
Limited to pipelines 12" and larger pipelines	Chip	Prosser	Latex Construction Company	Conyers	GA	Estimator	770-760-0820	222	chip.prosser@latexconstruction.com
Limited to 6" and smaller steel or plastic gas facilities	John	Walker	CEDS Construction	Cumming	Georgia	VP	770-889-2361	14	jwalker_ceds@bellsouth.net
Limited to 16" and smaller steel or plastic gas facilities	Payton	Crawford	Pride Utility	Cumming	Georgia	Operation Manager	770-532-0085		pcrawford@prideutility.com
Limited to 12" and smaller for steel or plastic gas facilities	Tony	Pittman	Southern Pipeline, Inc.	Winder	Georgia	Owner	770-589-5184		southernpipeline@aol.com
Limited to 12" and smaller for steel or plastic gas facilities	Scott	Lee	InfraSource	Oakwood	Georgia	General Superintendent	734-649-0035		scott.lee@infrasourceinc.com
Limited to 12" and smaller for steel or plastic gas facilities	Lance	Souther	D Lance Souther, Inc.	Macon	GA	President	478-742-2292		lance@dlsi.us
Limited to 12" and smaller for steel or plastic gas facilities	Edmund	Zammit	D Lance Souther, Inc.	Macon	GA		478-742-2292		edmund@dlsi.us
No Limitations	Chad	Zeis	Benton-Georgia, LLC	Douglasville	Georgia	Director-Distribution Ops	770-942-8180		czeis@benton-georgia.com
Limited to steel projects 4" steel and above	Dooley	Eaves	Troy Construction, LLC	Commerce	GA	Regional Manager	706-336-0063	201	deaves@troyconstruction.com
	Casey	Colbey	Troy Construction, LLC	Commerce	GA	Estimating	706-336-0063	203	coolbey@troyconstruction.com
Limited to projects in Catoosa, Dade, Walker, and Murray Counties (extreme NW GA)	SD	Newman	Hiwassee Construction Company, Inc.	Calhoun	TN	Owner	423-336-2271		Only available by cell. Email Todd at Southern Underground address below when
	Todd	Newman	Hiwassee Construction Company, Inc.	Calhoun	TN	Vice-President	423-421-3010		toddn@southernunderground.net
Limited to projects geographically from Marietta north to Tennessee only	Eugene	McCallie	Hunter Utility	Birchwood	TN	Operations Manager	423-339-2104		Hunterutility@aol.com

Georgia DOT Project: Riverside @ I-285 Roundabouts
GDOT P.I. 0010925

DESIGN-BUILD
MEMORANDUM OF UNDERSTANDING
between the
Georgia Department of Transportation (hereafter the DEPARTMENT)
and
Bellsouth Telecommunications, LLC DBA AT&T C (hereafter the OWNER)

Whereas the DEPARTMENT proposes to undertake a design-build project hereafter referred to as PROJECT to install Roundabouts on Riverside @ I-285 in FULTON County, Georgia by contract through competitive bidding procedures; and,

Whereas the DEPARTMENT will accomplish the PROJECT through a Design Consultant, Design Consultant Team and/or Contractor hereafter referred to as CONTRACTOR; and,

Whereas, where OWNER has property rights ("Prior Rights") at the location of the PROJECT, OWNER will provide written evidence as to said prior rights within the area and will provide written documentation of prior rights relating to any individual crossing or Utility Facility, at the location of the PROJECT; and

Whereas, OWNER acknowledges that, generally, absent a showing of prior rights, the costs of relocation, protection, removal, or adjustment performed by OWNER shall be borne by OWNER; and

Whereas, pursuant to O.C.G.A. § 32-6-170(b), DEPARTMENT is authorized to pay or participate in the payment of the costs of relocation, protection, or adjustment of OWNER'S facilities where DEPARTMENT has made the determination that (i) such payments are in the best interest of the public and necessary in order to expedite the staging of the design-build project; and (ii) the costs of the removal, relocation, protection, or adjustment of such facilities are included as part of the Contract between the Department and the Department's roadway contractor for the design-build project; and

1. Type of Utility

OWNER has the following utility facilities which may need to be adjusted or relocated as a result of the proposed PROJECT:

Type of facility or facilities of OWNER:
_____Domestic water mains and distribution lines and associated appurtenances
_____Sanitary Sewer facilities and/or Storm Drainage System
_____Electrical Distribution (overhead and underground) wires, poles, etc.
_____Electrical Transmission (overhead and underground) wires, poles, etc.
_____Natural Gas Distribution Facilities (underground)
_____Natural Gas Transmission Facilities (underground)
_____Petroleum Pipeline (underground)
__x__Telecommunications facilities and equipment
_____Cable TV facilities
_____Street Lighting
_____Internet Data Service
_____Other Facilities (Description) _____

2. New Utility Facilities Proposed (Betterment)

OWNER desires the following to be installed as new additional facilities within the PROJECT. Insert here or attach a detailed description of proposed new additional utility installations:

STA 105+00 22' LT to STA 106+50 10' LT-Install (2) 4 inch PVC conduits, approx. 160 linear feet. STA 112+86 5' LT to STA 113+90 40' LT-Install (2) 4 inch PVC conduits,

approx. 120 linear feet. Install 5 poles: STA 104+90 40-5 ID 37244, STA 106+84 45-5 ID 18602, STA 113+15 45-4 ID 14966, STA 114+80 50-3 ID 14964, STA 116+87 45-3 ID 8638.

3. Assignment of Responsibilities for Design and Construction

This MEMORANDUM OF UNDERSTANDING and the following shall serve as a *basis* for assignment of responsibilities and costs for the DEPARTMENT to enter into a Standard Utility Agreement (SUA) or Contract Item Agreement (CIA), if necessary, with OWNER once the PROJECT is awarded to the CONTRACTOR. For a PROJECT implementation, GDOT will not have in its possession exact costing plans to be utilized to determine exact locations of the removal, relocation, protection, or adjustment. However, Overhead/Subsurface Utility Engineering (SUE) investigations plans exist providing the best information and signifying the layout of known existing facilities. Please use these plans for developing the final determination of services as indicated below. The CONTRACTOR developed plans will be provided to the OWNER after the design build project is awarded by GDOT which shall be used by the CONTRACTOR as the final basis for the SUA or CIA. **Betterment costs will be the OWNER'S responsibility.**

NOTE: When the Utility Owner allows the relocation work to be included in the contract, all material cost will be paid for by the Contractor.

NOTE: Water and Sewer Design and Construction relocation work put in the contract will automatically be accomplished by the DEPARTMENT'S CONTRACTOR. The UTILITY OWNER will still have design approval authority. (No Pre-Approved Contractor/Consultant List required, leave page 6 blank). If you are a Water & Sewer Utility and choose to put your relocation Design and Construction in the contract, please check Design and Construction under Option 2 under 3B. Owner's electing to perform their own design, at their own cost, please select design under 3C.

OWNER hereby intends to:

3A. OWNER, at the DEPARTMENT'S cost, will provide the following services for the properties for which it has established prior rights (Check to signify):

Design _____
Construction _____

3B. OWNER, at the DEPARTMENT'S cost, for any removal, relocation, protection, adjustment and/or design (Regardless of Prior Rights) will allow their facilities to be placed into the DEPARTMENT'S contract for the following services pursuant to O.C.G.A. § 32-6-170(b). The DEPARTMENT will add the removal, relocation, protection, adjustment and/or design cost to the overall PROJECT's cost. (Check to signify):

Option 1: OWNER wants the work to be performed by the OWNER's pre-approved Design Consultants and/or Contractors.

Design x
Construction x

Option 2: OWNER wants the DEPARTMENT'S CONTRACTOR to perform the design and/or construction. (Check to signify):

Design ____
Construction ____ **If both are checked, please leave page 6 blank.**

As per this section, all work necessary for the removal, relocation, protection, or adjustment of the described utilities in accordance with the plans when approved shall be included in the project contract and accomplished by the CONTRACTOR except as follows (Check none or list any work items to be performed by the OWNER)

None _____

Excluded Items Pulling cable/fiber, Splicing and testing and aerial work.

Comments: All poles and conduit will be included in the contract

3C. OWNER, at OWNER'S cost, will provide the following services (Check to signify):

Design x
Construction x

The following is hereby mutually agreed to and understood by both parties:

1. The identification of existing facilities including preparation of Overhead/Subsurface Utility Engineering (SUE) investigations plans will be accomplished by the DEPARTMENT prior to award of the PROJECT and thereafter supplemented by the CONTRACTOR.
2. The CONTRACTOR shall coordinate reviews of the utility relocation information and obtain acceptance from the OWNER and DEPARTMENT when required. However; the OWNER shall apply for and obtain any required permits from the DEPARTMENT and perform any final design or proprietary design needed to administer its own relocation work if the work will not be included in the contract If the preliminary plans indicate that no conflict exists, and the OWNER concurs with this information, the OWNER shall provide a letter of "no conflict" to the CONTRACTOR.
3. After award of the PROJECT, the CONTRACTOR will research any claimed compensable property interest for each OWNER claiming prior rights under section 3A and present the findings to the DEPARTMENT and OWNER for approval. The plans and estimate for the utility work shall be subject to approval of both the DEPARTMENT and the OWNER prior to construction. If the OWNER chooses to perform it own relocations and the OWNER holds no property interest as stated above; the OWNER shall confirm in writing that the OWNER will relocate its own facilities at no cost to the DEPARTMENT or the CONTRACTOR.
4. All construction engineering and contract supervision shall be the responsibility of the DEPARTMENT and the CONTRACTOR to ensure that all utility work included in the contract is accomplished in accordance with the PROJECT's plans and specifications. The CONTRACTOR will consult with the OWNER before authorizing any changes or deviations which affect the OWNER's facility.
5. For utility work included in the contract, the CONTRACTOR shall ensure that the design/construction and installation of the OWNER'S facilities is performed by a contractor/design consultant pre-approved/registered with both the DEPARTMENT and the OWNER. For any work included in the contract, excluding water and sewer, the OWNER will provide a list of pre-approved/registered contractors/design consultants on page 6 of the MOU.
6. For Utility work included in the contract, the OWNER or the OWNER's Consultant shall have the right to visit and inspect the work at any time and advise the CONTRACTOR and the DEPARTMENT'S Engineer of any observed discrepancies or potential issues. The DEPARTMENT agrees to notify the OWNER when all utility work is completed and ready for final inspection by the OWNER.
7. Upon Maintenance Acceptance or Final Acceptance of the utility work included in the contract and upon certification by the DEPARTMENT'S Engineer and the OWNER that the work has been completed in accordance with the plans and specifications, the OWNER will accept the adjusted, relocated, and additional facilities and will thereafter operate and maintain said facilities located within the PROJECT right of way subject to the DEPARTMENT'S Utility Accommodations Policy and Standards Manual (UAM), current edition" and any agreements in effect without further cost to the DEPARTMENT or it's CONTRACTOR.
8. For the purpose of utility coordination, relocation and reimbursement matters, the OWNER shall cooperate with the CONTRACTOR in the same manner as if coordinating directly with the DEPARTMENT in accordance with the laws of the State of Georgia, the DEPARTMENT'S UAM and any agreements in effect between the DEPARTMENT and OWNER. The OWNER agrees to cooperate in good faith with the CONTRACTOR and to respond to all requests for information or meetings required to reach a resolution of any disputed items.
9. In accordance with the BUY AMERICA requirements of the Federal regulations (23 U.S.C. 313 and 23 CFR 635.410) all manufacturing processes for steel and iron products or predominantly of steel or iron (at

least 90% steel or iron content) furnished for permanent incorporation into the work on this project shall occur in the United States. The only exception to this requirement is the production of pig iron and the processing, pelletizing and reduction of iron ore, which may occur in another country. Other than these exceptions, all melting, rolling, extruding, machining, bending, grinding, drilling, coating, etc. must occur in the United States.

a. Products of steel include, but are not limited to, such products as structural steel piles, reinforcing steel, structural plate, steel culverts, guardrail, steel supports for signs, signals and luminaires, and cable wire/strand. Products of iron include, but are not limited to, such products as cast iron frames and grates and ductile iron pipe. Coatings include, but are not limited to, the applications of epoxy, galvanizing and paint. The coating material is not limited to this clause, only the application process.

b. A Certificate of Compliance shall be furnished for steel and iron products as part of the backup information with the billing. The form for this certification entitled **"Buy America Certificate of Compliance"** is attached to this agreement as **"Exhibit A."** Records to be maintained by the RAILROAD/UTILITIES and the Department for this certification shall include a signed mill test report and/or a signed certification by a supplier, distributor, fabricator, or manufacturer that has handled the steel or iron product affirming that every process, including the application of a coating, performed on the steel or iron product has been carried out in the United States of America, except as allowed by this Section. The lack of these certifications will be justification for rejection of the steel and/or iron product or nonpayment of the work.

c. The requirements of said law and regulations do not prevent the use of miscellaneous steel or iron components, subcomponents and hardware necessary to encase, assemble and construct the above products, manufactured products that are not predominantly steel or iron or a minimal use of foreign steel and iron materials if the cost of such materials used does not exceed one-tenth of one percent (0.1%) of the total contract price or $2,500.00, whichever is greater.

The Memorandum of Understanding will be incorporated into the project contract by reference or Exhibit.

APPROVED FOR THE OWNER BY:

(Signature) 02/10/15 (Date)

MNGR-OSP PLANNING & ENG

(Title)

APPROVED FOR THE DEPARTMENT BY:

(Signature) 2-11-15 (Date)

STATE UTILITIES ENGINEER

PI # 0010925

Pre-Approved Contractor List

Company Name: ANSCO & ASSOCIATES, LLC
Address: 736 PARK NORTH BLVD, STE 100, CLARKSTON GA, 30021
Phone: 404-508-5700
Contact Person: GEORGE SUMMERS
E-Mail: george.summers@anscollc.com

Company Name: MIKE BLACKBURN CONTRACTORS, INC
Address: 320 WAKE ROBIN DRIVE, SUNSET, SC 29685
Phone: 864-380-6479
Contact Person: MIKE BLACKBURN
E-Mail: keowee3@aol.com

Company Name: DANELLA CONSTRUCTION CORPORATION OF FL
Address: 581 WASHBURN RD, MELBOURNE, FL 32934
Phone: 321-259-6124
Contact Person: JOSEPH W HEMPLE
E-Mail: JHemple@danella.com

Please provide a minimum of three.

Pre-Approved Design Consultant List

Company Name: SOURCEONE CORP
Address: 1012 COGGINS PLACE NE, MARIETTA, GA 30060
Phone: 678-594-5100
Contact Person: BEN BLANTON
E-Mail: bblanton@sourceonecorp.com

Company Name: X-LINE, INC
Address: 241 WEST BANKHEAD HWY, VILLA RICA, GA 30180
Phone: 770-459-5939
Contact Person: DAVID JESSEN
E-Mail: david.jessen@x-lineinc.com

Company Name: _____
Address: _____
Phone: _____
Contact Person: _____
E-Mail: _____

Georgia DOT Project: Riverside @ I-285 Roundabouts
GDOT P.I. 0010925

DESIGN-BUILD
MEMORANDUM OF UNDERSTANDING
between the
Georgia Department of Transportation (hereafter the DEPARTMENT)
and
City of Atlanta COA (hereafter the OWNER)

Whereas the DEPARTMENT proposes to undertake a design-build project hereafter referred to as PROJECT # 0010925, Riverside @ I-285 Roundabouts in Fulton County, Georgia by contract through competitive bidding procedures; and,

Whereas the DEPARTMENT will accomplish the PROJECT through a Design Consultant, Design Consultant Team and/or Contractor hereafter referred to as CONTRACTOR; and,

Whereas, where OWNER has property rights ("Prior Rights") at the location of the PROJECT, OWNER will provide written evidence as to said prior rights within the area and will provide written documentation of prior rights relating to any individual crossing or Utility Facility, at the location of the PROJECT; and

Whereas, OWNER acknowledges that, generally, absent a showing of prior rights, the costs of relocation, protection, removal, or adjustment performed by OWNER shall be borne by OWNER; and

Whereas, pursuant to O.C.G.A. § 32-6-170(b), DEPARTMENT is authorized to pay or participate in the payment of the costs of relocation, protection, or adjustment of OWNER'S facilities where DEPARTMENT has made the determination that (i) such payments are in the best interest of the public and necessary in order to expedite the staging of the design-build project; and (ii) the costs of the removal, relocation, protection, or adjustment of such facilities are included as part of the Contract between the Department and the Department's roadway contractor for the design-build project; and

1. Type of Utility

OWNER has the following utility facilities which may need to be adjusted or relocated as a result of the proposed PROJECT:

Type of facility or facilities of OWNER:
✓ Domestic water mains and distribution lines and associated appurtenances
_____ Sanitary Sewer facilities and/or Storm Drainage System
_____ Electrical Distribution (overhead and underground) wires, poles, etc.
_____ Electrical Transmission (overhead and underground) wires, poles, etc.
_____ Natural Gas Distribution Facilities (underground)
_____ Natural Gas Transmission Facilities (underground)
_____ Petroleum Pipeline (underground)
_____ Telecommunications facilities and equipment
_____ Cable TV facilities
_____ Street Lighting
_____ Internet Data Service
_____ Other Facilities (Description) _____

2. New Utility Facilities Proposed (Betterment)

OWNER desires the following to be installed as new additional facilities within the PROJECT. Insert here or attach a detailed description of proposed new additional utility installations:

_____

_____

3. Assignment of Responsibilities for Design and Construction

This MEMORANDUM OF UNDERSTANDING and the following shall serve as a *basis* for assignment of responsibilities and costs for the DEPARTMENT to enter into a Standard Utility Agreement (SUA) or Contract Item Agreement (CIA), if necessary, with OWNER once the PROJECT is awarded to the CONTRACTOR. For a PROJECT implementation, GDOT will not have in its possession exact costing plans to be utilized to determine exact locations of the removal, relocation, protection, or adjustment. However, Overhead/Subsurface Utility Engineering (SUE) investigations plans exist providing the best information and signifying the layout of known existing facilities. Please use these plans for developing the final determination of services as indicated below. The CONTRACTOR developed plans will be provided to the OWNER after the design build project is awarded by GDOT which shall be used by the CONTRACTOR as the final basis for the SUA or CIA. **Betterment costs will be the OWNER'S responsibility.**

NOTE: Water and Sewer Design and Construction relocation work put in the contract will automatically be accomplished by the DEPARTMENT'S CONTRACTOR. The UTILITY OWNER will still have design approval authority. (No Pre-Approved Contractor/Consultant List required, leave page 6 blank). If you are a Water & Sewer Utility and choose to put your relocation Design and Construction in the contract, please check Design and Construction under Option 2 under 3B. Owner's electing to perform their own design, at their own cost, please select design under 3C.

OWNER hereby intends to:

3A. OWNER, at the DEPARTMENT'S cost, will provide the following services for the properties for which it has established prior rights (Check to signify):

Design _____
Construction _____

3B. OWNER, at the DEPARTMENT'S cost, for any removal, relocation, protection, adjustment and/or design (Regardless of Prior Rights) will allow their facilities to be placed into the DEPARTMENT'S contract for the following services pursuant to O.C.G.A. § 32-6-170(b). The DEPARTMENT will add the removal, relocation, protection, adjustment and/or design cost to the overall PROJECT's cost. (Check to signify):

Option 1: OWNER wants the work to be performed by the OWNER's pre-approved Design Consultants and/or Contractors.

Design _____
Construction _____

Option 2: OWNER wants the DEPARTMENT'S CONTRACTOR to perform the design and/or construction. (Check to signify):

Design ✓
Construction ✓ **If both are checked, please leave page 6 blank.**

As per this section, all work necessary for the removal, relocation, protection, or adjustment of the described utilities in accordance with the plans when approved shall be included in the project contract and accomplished by the CONTRACTOR except as follows (Check none or list any work items to be performed by the OWNER)

None _____

Excluded Items _____

Comments: _____

3C. OWNER, at OWNER'S cost, will provide the following services (Check to signify):

Design _____
Construction _____

The following is hereby mutually agreed to and understood by both parties:

1. The identification of existing facilities including preparation of Overhead/Subsurface Utility Engineering (SUE) investigations plans will be accomplished by the DEPARTMENT prior to award of the PROJECT and thereafter supplemented by the CONTRACTOR.
2. The CONTRACTOR shall coordinate reviews of the utility relocation information and obtain acceptance from the OWNER and DEPARTMENT when required. However; the OWNER shall apply for and obtain any required permits from the DEPARTMENT and perform any final design or proprietary design needed to administer its own relocation work if the work will not be included in the contract If the preliminary plans indicate that no conflict exists, and the OWNER concurs with this information, the OWNER shall provide a letter of "no conflict" to the CONTRACTOR.
3. After award of the PROJECT, the CONTRACTOR will research any claimed compensable property interest for each OWNER claiming prior rights under section 3A and present the findings to the DEPARTMENT and OWNER for approval. The plans and estimate for the utility work shall be subject to approval of both the DEPARTMENT and the OWNER prior to construction. If the OWNER chooses to perform it own relocations and the OWNER holds no property interest as stated above; the OWNER shall confirm in writing that the OWNER will relocate its own facilities at no cost to the DEPARTMENT or the CONTRACTOR.
4. All construction engineering and contract supervision shall be the responsibility of the DEPARTMENT and the CONTRACTOR to ensure that all utility work included in the contract is accomplished in accordance with the PROJECT's plans and specifications. The CONTRACTOR will consult with the OWNER before authorizing any changes or deviations which affect the OWNER's facility.
5. For utility work included in the contract, the CONTRACTOR shall ensure that the design/construction and installation of the OWNER'S facilities is performed by a contractor/design consultant pre-approved/registered with both the DEPARTMENT and the OWNER. For any work included in the contract, excluding water and sewer, the OWNER will provide a list of pre-approved/registered contractors/design consultants on page 6 of the MOU.
6. For Utility work included in the contract, the OWNER or the OWNER's Consultant shall have the right to visit and inspect the work at any time and advise the CONTRACTOR and the DEPARTMENT'S Engineer of any observed discrepancies or potential issues. The DEPARTMENT agrees to notify the OWNER when all utility work is completed and ready for final inspection by the OWNER.
7. Upon Maintenance Acceptance or Final Acceptance of the utility work included in the contract and upon certification by the DEPARTMENT'S Engineer and the OWNER that the work has been completed in accordance with the plans and specifications, the OWNER will accept the adjusted, relocated, and additional facilities and will thereafter operate and maintain said facilities located within the PROJECT right of way subject to the DEPARTMENT'S Utility Accommodations Policy and Standards Manual (UAM), current edition" and any agreements in effect without further cost to the DEPARTMENT or it's CONTRACTOR.
8. For the purpose of utility coordination, relocation and reimbursement matters, the OWNER shall cooperate with the CONTRACTOR in the same manner as if coordinating directly with the DEPARTMENT in accordance with the laws of the State of Georgia, the DEPARTMENT'S UAM and any agreements in effect between the DEPARTMENT and OWNER. The OWNER agrees to cooperate in good faith with the CONTRACTOR and to respond to all requests for information or meetings required to reach a resolution of any disputed items.
9. In accordance with the BUY AMERICA requirements of the Federal regulations (23 U.S.C. 313 and 23 CFR 635.410) all manufacturing processes for steel and iron products or predominantly of steel or iron (at least 90% steel or iron content) furnished for permanent incorporation into the work on this project shall

occur in the United States. The only exception to this requirement is the production of pig iron and the processing, pelletizing and reduction of iron ore, which may occur in another country. Other than these exceptions, all melting, rolling, extruding, machining, bending, grinding, drilling, coating, etc. must occur in the United States.

a. Products of steel include, but are not limited to, such products as structural steel piles, reinforcing steel, structural plate, steel culverts, guardrail, steel supports for signs, signals and luminaires, and cable wire/strand. Products of iron include, but are not limited to, such products as cast iron frames and grates and ductile iron pipe. Coatings include, but are not limited to, the applications of epoxy, galvanizing and paint. The coating material is not limited to this clause, only the application process.

b. A Certificate of Compliance shall be furnished for steel and iron products as part of the backup information with the billing. The form for this certification entitled **"Buy America Certificate of Compliance"** is attached to this agreement as **"Exhibit A."** Records to be maintained by the RAILROAD/UTILITIES and the Department for this certification shall include a signed mill test report and/or a signed certification by a supplier, distributor, fabricator, or manufacturer that has handled the steel or iron product affirming that every process, including the application of a coating, performed on the steel or iron product has been carried out in the United States of America, except as allowed by this Section. The lack of these certifications will be justification for rejection of the steel and/or iron product or nonpayment of the work.

c. The requirements of said law and regulations do not prevent the use of miscellaneous steel or iron components, subcomponents and hardware necessary to encase, assemble and construct the above products, manufactured products that are not predominantly steel or iron or a minimal use of foreign steel and iron materials if the cost of such materials used does not exceed one-tenth of one percent (0.1%) of the total contract price or $2,500.00, whichever is greater.

The Memorandum of Understanding will be incorporated into the project contract by reference or Exhibit.

APPROVED FOR THE OWNER BY:

J Maerina — 06/04/14
(Signature) (Date)

COMMISSIONER

APPROVED TO FORM BY:

Patti McAfee — 6/2/14
(Signature) (Date)

SR. ASST. CITY ATTORNEY

APPROVED FOR THE DEPARTMENT BY:

Michael J. Bolton — 6-12-14
(Signature) (Date)

STATE UTILITIES ENGINEER

Pre-Approved Contractor List

Company Name:
Address:
Phone:
Contact Person:
E-Mail:

Company Name:
Address:
Phone:
Contact Person:
E-Mail:

Company Name:
Address:
Phone:
Contact Person:
E-Mail:

Please provide a minimum of three.

Pre-Approved Design Consultant List

Company Name:
Address:
Phone:
Contact Person:
E-Mail:

Company Name:
Address:
Phone:
Contact Person:
E-Mail:

Company Name:
Address:
Phone:
Contact Person:
E-Mail:

All Pre-Approved Contractors/Consultants listed above must be Registered/Prequalified with the Department – Contractors must fill out one original DOT Form 478 and provide three reference letters. Send all documents to the: Georgia Department of Transportation, Office of Transportation Services – Contractor Prequalification, 600 West Peachtree Street, NW, 19th Floor, Atlanta, GA 30308

Please refer to the Department's website @ (http://www.dot.ga.gov/doingbusiness/prequalification) and follow instructions for contractor Registration/Prequalification

Georgia DOT Project: Riverside @ I-285 Roundabouts
GDOT P.I. # 0010925

DESIGN-BUILD
MEMORANDUM OF UNDERSTANDING
between the
Georgia Department of Transportation (hereafter the DEPARTMENT)
and
Comcast (hereafter the OWNER)

Whereas the DEPARTMENT proposes to undertake a design-build project hereafter referred to as PROJECT #0010925, Riverside @ in Fulton County, Georgia by contract through competitive bidding procedures; and,

Whereas the DEPARTMENT will accomplish the PROJECT through a Design Consultant, Design Consultant Team and/or Contractor hereafter referred to as CONTRACTOR; and,

Whereas, where OWNER has property rights ("Prior Rights") at the location of the PROJECT, OWNER will provide written evidence as to said prior rights within the area and will provide written documentation of prior rights relating to any individual crossing or Utility Facility, at the location of the PROJECT; and

Whereas, OWNER acknowledges that, generally, absent a showing of prior rights, the costs of relocation, protection, removal, or adjustment performed by OWNER shall be borne by OWNER; and

Whereas, pursuant to O.C.G.A. § 32-6-170(b), DEPARTMENT is authorized to pay or participate in the payment of the costs of relocation, protection, or adjustment of OWNER'S facilities where DEPARTMENT has made the determination that (i) such payments are in the best interest of the public and necessary in order to expedite the staging of the design-build project; and (ii) the costs of the removal, relocation, protection, or adjustment of such facilities are included as part of the Contract between the Department and the Department's roadway contractor for the design-build project; and

1. Type of Utility

OWNER has the following utility facilities which may need to be adjusted or relocated as a result of the proposed PROJECT:

Type of facility or facilities of OWNER:

Domestic water mains and distribution lines and associated appurtenances

Sanitary Sewer facilities and/or Storm Drainage System

Electrical Distribution (overhead and underground) wires, poles, etc.

Electrical Transmission (overhead and underground) wires, poles, etc.

Natural Gas Distribution Facilities (underground)

Natural Gas Transmission Facilities (underground)

Petroleum Pipeline (underground)

Telecommunications facilities and equipment

✓ Cable TV facilities

Street Lighting

✓ Internet Data Service

Other Facilities (Description) _____

2. New Utility Facilities Proposed (Betterment)

OWNER desires the following to be installed as new additional facilities within the PROJECT. Insert here or attach a detailed description of proposed new additional utility installations:

_____

_____

3. Assignment of Responsibilities for Design and Construction

This MEMORANDUM OF UNDERSTANDING and the following shall serve as a *basis* for assignment of responsibilities and costs for the DEPARTMENT to enter into a Standard Utility Agreement (SUA) or Contract Item Agreement (CIA), if necessary, with OWNER once the PROJECT is awarded to the CONTRACTOR. For a PROJECT implementation, GDOT will not have in its possession exact costing plans to be utilized to determine exact locations of the removal, relocation, protection, or adjustment. However, Overhead/Subsurface Utility Engineering (SUE) investigations plans exist providing the best information and signifying the layout of known existing facilities. Please use these plans for developing the final determination of services as indicated below. The CONTRACTOR developed plans will be provided to the OWNER after the design build project is awarded by GDOT which shall be used by the CONTRACTOR as the final basis for the SUA or CIA. **Betterment costs will be the OWNER'S responsibility.**

NOTE: Water and Sewer Design and Construction relocation work put in the contract will automatically be accomplished by the DEPARTMENT'S CONTRACTOR. The UTILITY OWNER will still have design approval authority. (No Pre-Approved Contractor/Consultant List required, leave page 6 blank). If you are a Water & Sewer Utility and choose to put your relocation Design and Construction in the contract, please check Design and Construction under Option 2 under 3B. Owner's electing to perform their own design, at their own cost, please select design under 3C.

OWNER hereby intends to:

A. OWNER, at the DEPARTMENT'S cost, will provide the following services for the properties for which it has established prior rights (Check to signify):

Design

Construction

B. OWNER, at the DEPARTMENT'S cost, for any removal, relocation, protection, adjustment and/or design (Regardless of Prior Rights) will allow their facilities to be placed into the DEPARTMENT'S contract for the following services pursuant to O.C.G.A. § 32-6-170(b). The DEPARTMENT will add the removal, relocation, protection, adjustment and/or design cost to the overall PROJECT's cost. (Check to signify):

Option 1: OWNER wants the work to be performed by the OWNER's pre-approved Design Consultants and/or Contractors.

Design ✓

Construction ✓

Option 2: OWNER wants the DEPARTMENT'S CONTRACTOR to perform the design and/or construction. (Check to signify):

Design

Construction **If both are checked, please leave page 6 blank.**

As per this section, all work necessary for the removal, relocation, protection, or adjustment of the described utilities in accordance with the plans when approved shall be included in the project contract and accomplished by the CONTRACTOR except as follows (Check none or list any work items to be performed by the OWNER)

None ✓

Excluded Items _____

_____

_____

Comments: _____

_____

_____

_____

_____

_____

_____

C. OWNER, at OWNER'S cost, will provide the following services (Check to signify):

Design

Construction

The following is hereby mutually agreed to and understood by both parties:

1. The identification of existing facilities including preparation of Overhead/Subsurface Utility Engineering (SUE) investigations plans will be accomplished by the DEPARTMENT prior to award of the PROJECT and thereafter supplemented by the CONTRACTOR.
2. The CONTRACTOR shall coordinate reviews of the utility relocation information and obtain acceptance from the OWNER and DEPARTMENT when required. However; the OWNER shall apply for and obtain any required permits from the DEPARTMENT and perform any final design or proprietary design needed to administer its own relocation work if the work will not be included in the contract. If the preliminary plans indicate that no conflict exists, and the OWNER concurs with this information, the OWNER shall provide a letter of "no conflict" to the CONTRACTOR.
3. After award of the PROJECT, the CONTRACTOR will research any claimed compensable property interest by each OWNER claiming prior rights under section 3A and present the findings to the DEPARTMENT and OWNER for approval. The plans and estimate for the utility work shall be subject to approval of both the DEPARTMENT and the OWNER prior to construction. If the OWNER chooses to perform it own relocations and the OWNER holds no property interest as stated above; the OWNER shall confirm in writing that the OWNER will relocate its own facilities at no cost to the DEPARTMENT or the CONTRACTOR.
4. All construction engineering and contract supervision shall be the responsibility of the DEPARTMENT and the CONTRACTOR to ensure that all utility work included in the contract is accomplished in accordance with the PROJECT's plans and specifications. The CONTRACTOR will consult with the OWNER before authorizing any changes or deviations which affect the OWNER's facility.
5. For utility work included in the contract, the CONTRACTOR shall ensure that the design/construction and installation of the OWNER'S facilities is performed by a contractor/design consultant pre-approved/registered with both the DEPARTMENT and the OWNER. For any work included in the contract, excluding water and sewer, the OWNER will provide a list of pre-approved/registered contractors/design consultants on page 6 of the MOU.
6. For Utility work included in the contract, the OWNER or the OWNER's Consultant shall have the right to visit and inspect the work at any time and advise the CONTRACTOR and the DEPARTMENT'S Engineer of any observed discrepancies or potential issues. The DEPARTMENT agrees to notify the OWNER when all utility work is completed and ready for final inspection by the OWNER.
7. Upon Maintenance Acceptance or Final Acceptance of the utility work included in the contract and upon certification by the DEPARTMENT'S Engineer and the OWNER that the work has been completed in accordance with the plans and specifications, the OWNER will accept the adjusted, relocated, and additional facilities and will thereafter operate and maintain said facilities located within the PROJECT right of way subject to the DEPARTMENT'S Utility Accommodations Policy and Standards Manual (UAM), current edition" and any agreements in effect without further cost to the DEPARTMENT or it's CONTRACTOR.
8. For the purpose of utility coordination, relocation and reimbursement matters, the OWNER shall cooperate with the CONTRACTOR in the same manner as if coordinating directly with the DEPARTMENT in accordance with the laws of the State of Georgia, the DEPARTMENT'S UAM and any agreements in effect between the DEPARTMENT and OWNER. The OWNER agrees to cooperate in good faith with the CONTRACTOR and to respond to all requests for information or meetings required to reach a resolution of any disputed items.

9. In accordance with the BUY AMERICA requirements of the Federal regulations (23 U.S.C. 313 and 23 CFR 635.410) all manufacturing processes for steel and iron products or predominantly of steel or iron (at least 90% steel or iron content) furnished for permanent incorporation into the work on this project shall occur in the United States. The only exception to this requirement is the production of pig iron and the processing, pelletizing and reduction of iron ore, which may occur in another country. Other than these exceptions, all melting, rolling, extruding, machining, bending, grinding, drilling, coating, etc. must occur in the United States.

    a. Products of steel include, but are not limited to, such products as structural steel piles, reinforcing steel, structural plate, steel culverts, guardrail, steel supports for signs, signals and luminaires, and cable wire/strand. Products of iron include, but are not limited to, such products as cast iron frames and grates and ductile iron pipe. Coatings include, but are not limited to, the applications of epoxy, galvanizing and paint. The coating material is not limited to this clause, only the application process.

    b. A Certificate of Compliance shall be furnished for steel and iron products as part of the backup information with the billing. The form for this certification entitled **"Buy America Certificate of Compliance"** is attached to this agreement as **"Exhibit A."** Records to be maintained by the RAILROAD/UTILITIES and the Department for this certification shall include a signed mill test report and/or a signed certification by a supplier, distributor, fabricator, or manufacturer that has handled the steel or iron product affirming that every process, including the application of a coating, performed on the steel or iron product has been carried out in the United States of America, except as allowed by this Section. The lack of these certifications will be justification for rejection of the steel and/or iron product or nonpayment of the work.

    c. The requirements of said law and regulations do not prevent the use of miscellaneous steel or iron components, subcomponents and hardware necessary to encase, assemble and construct the above products, manufactured products that are not predominantly steel or iron or a minimal use of foreign steel and iron materials if the cost of such materials used does not exceed one-tenth of one percent (0.1%) of the total contract price or $2,500.00, whichever is greater.

The Memorandum of Understanding will be incorporated into the project contract by reference or Exhibit.

APPROVED FOR THE OWNER BY:

(Signature) J. David Tyson (Printed Name)

Construction Supervisor (Title) 6/9/14 (Date)

APPROVED FOR THE DEPARTMENT BY:

Michael G. Holden (Signature) 6-27-14 (Date)

STATE UTILITIES ENGINEER

Pre-Approved Contractor List

Company Name: Comtrac Services, Inc.
Address: 2250 Lithonia Industrial Blvd. Lithonia, Ga. 30058
Phone: 770-934-9595
Contact Person: David Hendee
E-Mail: david.hendee@comtracinc.com

Company Name: Sirah Contracting Inc.
Address: 2335 Sigman Industrial Court,Conyers, Ga. 30085
Phone: 770-761-9940
Contact Person: Charles Nolte
E-Mail: mailto:cnolte@sirahcontracting.com

Company Name: Cable East
Address: 1940 Statham Drive (Po Box 1367) Statham, Ga 30666
Phone: 678-753-1410
Contact Person: Dale Massingill
E-Mail: mailto:Dale.Massingill@cable-east.c

Please provide a minimum of three.

Pre-Approved Design Consultant List

Company Name: CCI Systems – Alpharetta office (Design only after field work)
Address: 1815 Lockeway Dr. suite 103
Phone: 1-470-233-7133
Contact Person: Tim Gonyea
E-Mail: mailto:Tim.Gonyea@ccisystems.com

Company Name: BNS Engineering (field work only)
Address: 4862 Cherokee Street Acworth, Ga. 30101
Phone: 770-966-0628
Contact Person: Robert Keck
E-Mail: mailto:engineering_department@bns

Company Name:
Address:
Phone:
Contact Person:
E-Mail:

All Pre-Approved Contractors/Consultants listed above must be Registered/Prequalified with the Department – Contractors must fill out one original DOT Form 478 and provide three reference letters. Send all documents to the: Georgia Department of Transportation, Office of Transportation Services – Contractor Prequalification, 600 West Peachtree Street, NW, 19th Floor, Atlanta, GA 30308

Please refer to the Department's website @ (http://www.dot.ga.gov/doingbusiness/prequalification) and follow instructions for contractor Registration/Prequalification

D.O.T. 66

DEPARTMENT OF TRANSPORTATION
STATE OF GEORGIA

INTERDEPARTMENT CORRESPONDENCE

FILE Fulton County
PI No. 0010925

Office Utilities- Atlanta

Date May 29, 2014

FROM Michael J. Bolden, State Utilities Engineer

TO Rachel Brown, District Engineer, Cartersville
Attn.: Patrick Allen, District Utilities Engineer

SUBJECT **Executed Memorandum of Understanding – Design Build**

Attached for your use are two copies (originals) of the Memorandum of Understanding (MOU) for the above project which has been executed by the Department. Please forward one copy of the MOU to Fulton County Sewer.

If you have any questions contact, Jun Birnkammer at 404-347-0606.

MB: LU: JB

Attachment

Georgia DOT Project: Riverside @ I-285 Roundabouts
GDOT P.I. # 0010925

DESIGN-BUILD
MEMORANDUM OF UNDERSTANDING
between the
Georgia Department of Transportation (hereafter the DEPARTMENT)
and
Fulton County Sewer (hereafter the OWNER)

Whereas the DEPARTMENT proposes to undertake a design-build project hereafter referred to as PROJECT #0010925, Riverside @ in Fulton County, Georgia by contract through competitive bidding procedures; and,

Whereas the DEPARTMENT will accomplish the PROJECT through a Design Consultant, Design Consultant Team and/or Contractor hereafter referred to as CONTRACTOR; and,

Whereas. where OWNER has property rights ("Prior Rights") at the location of the PROJECT, OWNER will provide written evidence as to said prior rights within the area and will provide written documentation of prior rights relating to any individual crossing or Utility Facility, at the location of the PROJECT; and

Whereas, OWNER acknowledges that, generally, absent a showing of prior rights, the costs of relocation, protection, removal, or adjustment performed by OWNER shall be borne by OWNER; and

Whereas, pursuant to O.C.G.A. § 32-6-170(b), DEPARTMENT is authorized to pay or participate in the payment of the costs of relocation, protection, or adjustment of OWNER'S facilities where DEPARTMENT has made the determination that (i) such payments are in the best interest of the public and necessary in order to expedite the staging of the design-build project; and (ii) the costs of the removal, relocation, protection, or adjustment of such facilities are included as part of the Contract between the Department and the Department's roadway contractor for the design-build project; and

1. Type of Utility

OWNER has the following utility facilities which may need to be adjusted or relocated as a result of the proposed PROJECT:

Type of facility or facilities of OWNER:

- Domestic water mains and distribution lines and associated appurtenances
- ✓ Sanitary Sewer facilities and/or Storm Drainage System
- Electrical Distribution (overhead and underground) wires, poles, etc.
- Electrical Transmission (overhead and underground) wires, poles, etc.
- Natural Gas Distribution Facilities (underground)
- Natural Gas Transmission Facilities (underground)
- Petroleum Pipeline (underground)
- Telecommunications facilities and equipment

Cable TV facilities

Street Lighting

Internet Data Service

Other Facilities (Description) _____

2. New Utility Facilities Proposed (Betterment)

OWNER desires the following to be installed as new additional facilities within the PROJECT. Insert here or attach a detailed description of proposed new additional utility installations:

_____

_____

3. Assignment of Responsibilities for Design and Construction

This MEMORANDUM OF UNDERSTANDING and the following shall serve as a *basis* for assignment of responsibilities and costs for the DEPARTMENT to enter into a Standard Utility Agreement (SUA) or Contract Item Agreement (CIA), if necessary, with OWNER once the PROJECT is awarded to the CONTRACTOR. For a PROJECT implementation, GDOT will not have in its possession exact costing plans to be utilized to determine exact locations of the removal, relocation, protection, or adjustment. However, Overhead/Subsurface Utility Engineering (SUE) investigations plans exist providing the best information and signifying the layout of known existing facilities. Please use these plans for developing the final determination of services as indicated below. The CONTRACTOR developed plans will be provided to the OWNER after the design build project is awarded by GDOT which shall be used by the CONTRACTOR as the final basis for the SUA or CIA. **Betterment costs will be the OWNER'S responsibility.**

NOTE: Water and Sewer Design and Construction relocation work put in the contract will automatically be accomplished by the DEPARTMENT'S CONTRACTOR. The UTILITY OWNER will still have design approval authority. (No Pre-Approved Contractor/Consultant List required, leave page 6 blank). If you are a Water & Sewer Utility and choose to put your relocation Design and Construction in the contract, please check Design and Construction under Option 2 under 3B. Owner's electing to perform their own design, at their own cost, please select design under 3C.

OWNER hereby intends to:

A. OWNER, at the DEPARTMENT'S cost, will provide the following services for the properties for which it has established prior rights (Check to signify):

Design

Construction

B. OWNER, at the DEPARTMENT'S cost, for any removal, relocation, protection, adjustment and/or design (Regardless of Prior Rights) will allow their facilities to be placed into the DEPARTMENT'S contract for the following services pursuant to O.C.G.A. § 32-6-170(b). The DEPARTMENT will add the removal, relocation, protection, adjustment and/or design cost to the overall PROJECT's cost. (Check to signify):

Option 1: OWNER wants the work to be performed by the OWNER's pre-approved Design Consultants and/or Contractors.

Design

Construction

Option 2: OWNER wants the DEPARTMENT'S CONTRACTOR to perform the design and/or construction. (Check to signify):

Design ✓

Construction ✓ **If both are checked, please leave page 6 blank.**

As per this section, all work necessary for the removal, relocation, protection, or adjustment of the described utilities in accordance with the plans when approved shall be included in the project contract and accomplished by the CONTRACTOR except as follows (Check none or list any work items to be performed by the OWNER)

None

Excluded Items _____

_____

_____

Comments: _____

_____

_____

_____

_____

_____

_____

C. OWNER, at OWNER'S cost, will provide the following services (Check to signify):

Design

Construction

The following is hereby mutually agreed to and understood by both parties:

1. The identification of existing facilities including preparation of Overhead/Subsurface Utility Engineering (SUE) investigations plans will be accomplished by the DEPARTMENT prior to award of the PROJECT and thereafter supplemented by the CONTRACTOR.
2. The CONTRACTOR shall coordinate reviews of the utility relocation information and obtain acceptance from the OWNER and DEPARTMENT when required. However; the OWNER shall apply for and obtain any required permits from the DEPARTMENT and perform any final design or proprietary design needed to administer its own relocation work if the work will not be included in the contract. If the preliminary plans indicate that no conflict exists, and the OWNER concurs with this information, the OWNER shall provide a letter of "no conflict" to the CONTRACTOR.
3. After award of the PROJECT, the CONTRACTOR will research any claimed compensable property interest by each OWNER claiming prior rights under section 3A and present the findings to the DEPARTMENT and OWNER for approval. The plans and estimate for the utility work shall be subject to approval of both the DEPARTMENT and the OWNER prior to construction. If the OWNER chooses to perform it own relocations and the OWNER holds no property interest as stated above; the OWNER shall confirm in writing that the OWNER will relocate its own facilities at no cost to the DEPARTMENT or the CONTRACTOR.
4. All construction engineering and contract supervision shall be the responsibility of the DEPARTMENT and the CONTRACTOR to ensure that all utility work included in the contract is accomplished in accordance with the PROJECT's plans and specifications. The CONTRACTOR will consult with the OWNER before authorizing any changes or deviations which affect the OWNER's facility.
5. For utility work included in the contract, the CONTRACTOR shall ensure that the design/construction and installation of the OWNER'S facilities is performed by a contractor/design consultant pre-approved/registered with both the DEPARTMENT and the OWNER. For any work included in the contract, excluding water and sewer, the OWNER will provide a list of pre-approved/registered contractors/design consultants on page 6 of the MOU.
6. For Utility work included in the contract, the OWNER or the OWNER's Consultant shall have the right to visit and inspect the work at any time and advise the CONTRACTOR and the DEPARTMENT'S Engineer of any observed discrepancies or potential issues. The DEPARTMENT agrees to notify the OWNER when all utility work is completed and ready for final inspection by the OWNER.
7. Upon Maintenance Acceptance or Final Acceptance of the utility work included in the contract and upon certification by the DEPARTMENT'S Engineer and the OWNER that the work has been completed in accordance with the plans and specifications, the OWNER will accept the adjusted, relocated, and additional facilities and will thereafter operate and maintain said facilities located within the PROJECT right of way subject to the DEPARTMENT'S Utility Accommodations Policy and Standards Manual (UAM), current edition" and any agreements in effect without further cost to the DEPARTMENT or it's CONTRACTOR.
8. For the purpose of utility coordination, relocation and reimbursement matters, the OWNER shall cooperate with the CONTRACTOR in the same manner as if coordinating directly with the DEPARTMENT in accordance with the laws of the State of Georgia, the DEPARTMENT'S UAM and any agreements in effect between the DEPARTMENT and OWNER. The OWNER agrees to cooperate in good faith with the CONTRACTOR and to respond to all requests for information or meetings required to reach a resolution of any disputed items.

9. In accordance with the BUY AMERICA requirements of the Federal regulations (23 U.S.C. 313 and 23 CFR 635.410) all manufacturing processes for steel and iron products or predominantly of steel or iron (at least 90% steel or iron content) furnished for permanent incorporation into the work on this project shall occur in the United States. The only exception to this requirement is the production of pig iron and the processing, pelletizing and reduction of iron ore, which may occur in another country. Other than these exceptions, all melting, rolling, extruding, machining, bending, grinding, drilling, coating, etc. must occur in the United States.

    a. Products of steel include, but are not limited to, such products as structural steel piles, reinforcing steel, structural plate, steel culverts, guardrail, steel supports for signs, signals and luminaires, and cable wire/strand. Products of iron include, but are not limited to, such products as cast iron frames and grates and ductile iron pipe. Coatings include, but are not limited to, the applications of epoxy, galvanizing and paint. The coating material is not limited to this clause, only the application process.

    b. A Certificate of Compliance shall be furnished for steel and iron products as part of the backup information with the billing. The form for this certification entitled **"Buy America Certificate of Compliance"** is attached to this agreement as **"Exhibit A."** Records to be maintained by the RAILROAD/UTILITIES and the Department for this certification shall include a signed mill test report and/or a signed certification by a supplier, distributor, fabricator, or manufacturer that has handled the steel or iron product affirming that every process, including the application of a coating, performed on the steel or iron product has been carried out in the United States of America, except as allowed by this Section. The lack of these certifications will be justification for rejection of the steel and/or iron product or nonpayment of the work.

    c. The requirements of said law and regulations do not prevent the use of miscellaneous steel or iron components, subcomponents and hardware necessary to encase, assemble and construct the above products, manufactured products that are not predominantly steel or iron or a minimal use of foreign steel and iron materials if the cost of such materials used does not exceed one-tenth of one percent (0.1%) of the total contract price or $2,500.00, whichever is greater.

The Memorandum of Understanding will be incorporated into the project contract by reference or Exhibit.

APPROVED FOR THE OWNER BY:

Kun Suwanarpa
(Signature)

Kun Suwanarpa
(Printed Name)

Interim Director
(Title)

5/14/2014
(Date)

APPROVED FOR THE DEPARTMENT BY:

Michael T. Boldus (E.V.)
(Signature)

5/29/2014
(Date)

STATE UTILITIES ENGINEER

Pre-Approved Contractor List

Company Name:
Address:
Phone:
Contact Person:
E-Mail:

Company Name:
Address:
Phone:
Contact Person:
E-Mail:

Company Name:
Address:
Phone:
Contact Person:
E-Mail:

Please provide a minimum of three.

Pre-Approved Design Consultant List

Company Name:
Address:
Phone:
Contact Person:
E-Mail:

Company Name:
Address:
Phone:
Contact Person:
E-Mail:

Company Name:
Address:
Phone:
Contact Person:
E-Mail:

All Pre-Approved Contractors/Consultants listed above must be Registered/Prequalified with the Department – Contractors must fill out one original DOT Form 478 and provide three reference letters. Send all documents to the: Georgia Department of Transportation, Office of Transportation Services – Contractor Prequalification, 600 West Peachtree Street, NW, 19th Floor, Atlanta, GA 30308

Please refer to the Department's website @ (http://www.dot.ga.gov/doingbusiness/prequalification) and follow instructions for contractor Registration/Prequalification

Public Information and Detour Open House
P.I. No. 0010925, Fulton County
I-285 Ramps @ County Road (CR) 205/Riverside Drive
Project Detour Map

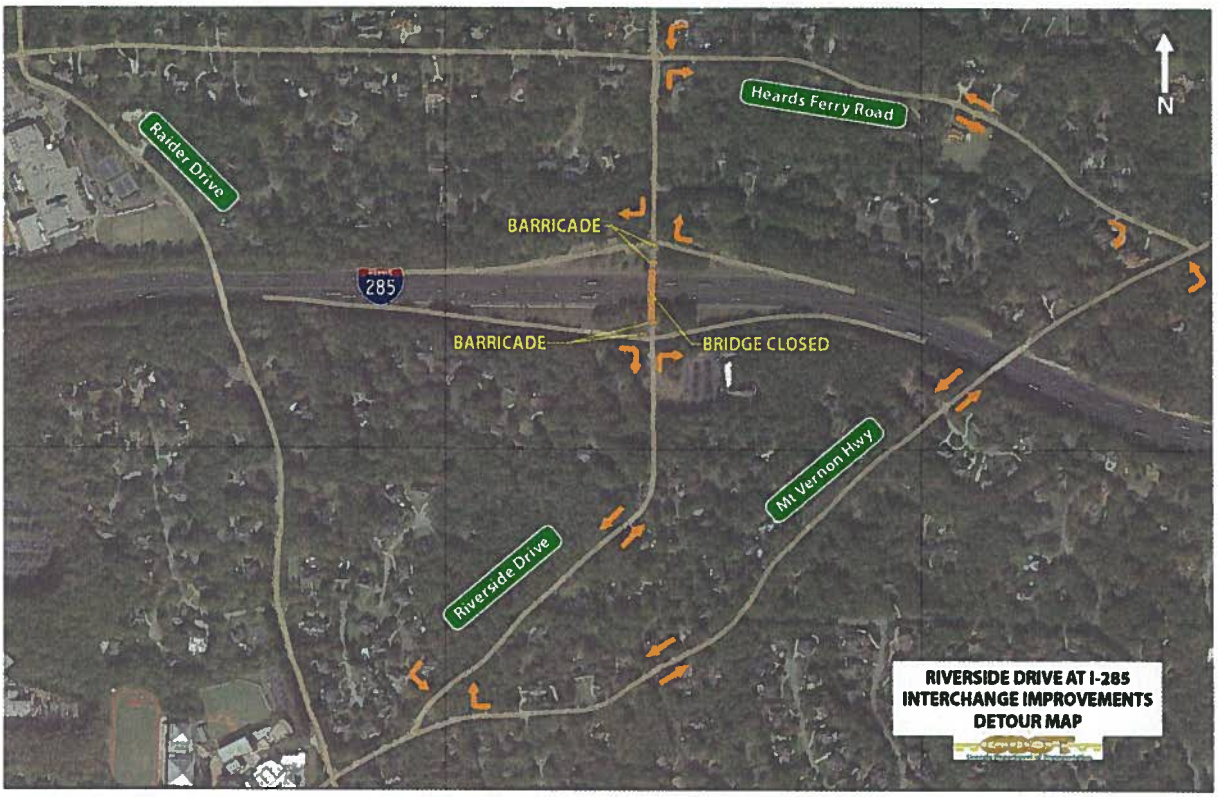

Public Information and Detour Open House
P.I. No. 0010925, Fulton County
I-285 Ramps @ County Road 209/Riverside Drive
Project Location Map

Georgia DOT Project: Riverside @ I-285 Roundabouts
GDOT P.I. # 0010925

DESIGN-BUILD
MEMORANDUM OF UNDERSTANDING
between the
Georgia Department of Transportation (hereafter the DEPARTMENT)
and
Georgia Power Distribution (hereafter the OWNER)

Whereas the DEPARTMENT proposes to undertake a design-build project hereafter referred to as PROJECT #0010925, Riverside @ in Fulton County, Georgia by contract through competitive bidding procedures; and,

Whereas the DEPARTMENT will accomplish the PROJECT through a Design Consultant, Design Consultant Team and/or Contractor hereafter referred to as CONTRACTOR; and,

Whereas, where OWNER has property rights ("Prior Rights") at the location of the PROJECT, OWNER will provide written evidence as to said prior rights within the area and will provide written documentation of prior rights relating to any individual crossing or Utility Facility, at the location of the PROJECT; and

Whereas, OWNER acknowledges that, generally, absent a showing of prior rights, the costs of relocation, protection, removal, or adjustment performed by OWNER shall be borne by OWNER; and

Whereas, pursuant to O.C.G.A. § 32-6-170(b), DEPARTMENT is authorized to pay or participate in the payment of the costs of relocation, protection, or adjustment of OWNER'S facilities where DEPARTMENT has made the determination that (i) such payments are in the best interest of the public and necessary in order to expedite the staging of the design-build project; and (ii) the costs of the removal, relocation, protection, or adjustment of such facilities are included as part of the Contract between the Department and the Department's roadway contractor for the design-build project; and

1. Type of Utility

OWNER has the following utility facilities which may need to be adjusted or relocated as a result of the proposed PROJECT:

Type of facility or facilities of OWNER:

- ___ Domestic water mains and distribution lines and associated appurtenances
- ___ Sanitary Sewer facilities and/or Storm Drainage System
- ✓ Electrical Distribution (overhead and underground) wires, poles, etc.
- ___ Electrical Transmission (overhead and underground) wires, poles, etc.
- ___ Natural Gas Distribution Facilities (underground)
- ___ Natural Gas Transmission Facilities (underground)
- ___ Petroleum Pipeline (underground)
- ___ Telecommunications facilities and equipment

___ Cable TV facilities

___ Street Lighting

___ Internet Data Service

___ Other Facilities (Description) _____

2. New Utility Facilities Proposed (Betterment)

OWNER desires the following to be installed as new additional facilities within the PROJECT. Insert here or attach a detailed description of proposed new additional utility installations:

_____

_____

3. Assignment of Responsibilities for Design and Construction

This MEMORANDUM OF UNDERSTANDING and the following shall serve as a *basis* for assignment of responsibilities and costs for the DEPARTMENT to enter into a Standard Utility Agreement (SUA) or Contract Item Agreement (CIA), if necessary, with OWNER once the PROJECT is awarded to the CONTRACTOR. For a PROJECT implementation, GDOT will not have in its possession exact costing plans to be utilized to determine exact locations of the removal, relocation, protection, or adjustment. However, Overhead/Subsurface Utility Engineering (SUE) investigations plans exist providing the best information and signifying the layout of known existing facilities. Please use these plans for developing the final determination of services as indicated below. The CONTRACTOR developed plans will be provided to the OWNER after the design build project is awarded by GDOT which shall be used by the CONTRACTOR as the final basis for the SUA or CIA. **Betterment costs will be the OWNER'S responsibility.**

NOTE: Water and Sewer Design and Construction relocation work put in the contract will automatically be accomplished by the DEPARTMENT'S CONTRACTOR. The UTILITY OWNER will still have design approval authority. (No Pre-Approved Contractor/Consultant List required, leave page 6 blank). If you are a Water & Sewer Utility and choose to put your relocation Design and Construction in the contract, please check Design and Construction under Option 2 under 3B. Owner's electing to perform their own design, at their own cost, please select design under 3C.

OWNER hereby intends to:

A. OWNER, at the DEPARTMENT'S cost, will provide the following services for the properties for which it has established prior rights (Check to signify):

Design ___

Construction ___

B. OWNER, at the DEPARTMENT'S cost, for any removal, relocation, protection, adjustment and/or design (Regardless of Prior Rights) will allow their facilities to be placed into the DEPARTMENT'S contract for the following services pursuant to O.C.G.A. § 32-6-170(b). The DEPARTMENT will add the removal, relocation, protection, adjustment and/or design cost to the overall PROJECT's cost. (Check to signify):

Option 1: OWNER wants the work to be performed by the OWNER's pre-approved Design Consultants and/or Contractors.

Design ✓

Construction ✓

Option 2: OWNER wants the DEPARTMENT'S CONTRACTOR to perform the design and/or construction. (Check to signify):

Design ___

Construction ___ **If both are checked, please leave page 6 blank.**

As per this section, all work necessary for the removal, relocation, protection, or adjustment of the described utilities in accordance with the plans when approved shall be included in the project contract and accomplished by the CONTRACTOR except as follows (Check none or list any work items to be performed by the OWNER)

None

Excluded Items ALL ELECTRICAL DISTRIBUTION MATERIALS FOR ANY RELOCATIONS AND/OR ADJUSTMENTS TO THE GEORGIA POWER FACILITIES WILL BE PROVIDED BY GEORGIA POWER COMPANY, AT THE COST TO THE ROADWAY CONTRACTOR.

Comments: ALL ELECTRICAL DISTRIBUTION MATERIALS FOR ANY RELOCATIONS AND/OR ADJUSTMENTS TO THE GEORGIA POWER FACILITIES SHALL BE PURCHASED FROM GEORGIA POWER COMPANY BY THE ROADWAY CONTRACTOR. THE ROADWAY CONTRACTOR SHALL PICK UP SUCH MATERIALS FROM THE GEORGIA POWER COMPANY FACILITIY/WAREHOUSE.

C. OWNER, at OWNER'S cost, will provide the following services (Check to signify):

Design ___

Construction ___

The following is hereby mutually agreed to and understood by both parties:

1. The identification of existing facilities including preparation of Overhead/Subsurface Utility Engineering (SUE) investigations plans will be accomplished by the DEPARTMENT prior to award of the PROJECT and thereafter supplemented by the CONTRACTOR.
2. The CONTRACTOR shall coordinate reviews of the utility relocation information and obtain acceptance from the OWNER and DEPARTMENT when required. However; the OWNER shall apply for and obtain any required permits from the DEPARTMENT and perform any final design or proprietary design needed to administer its own relocation work if the work will not be included in the contract. If the preliminary plans indicate that no conflict exists, and the OWNER concurs with this information, the OWNER shall provide a letter of "no conflict" to the CONTRACTOR.
3. After award of the PROJECT, the CONTRACTOR will research any claimed compensable property interest by each OWNER claiming prior rights under section 3A and present the findings to the DEPARTMENT and OWNER for approval. The plans and estimate for the utility work shall be subject to approval of both the DEPARTMENT and the OWNER prior to construction. If the OWNER chooses to perform it own relocations and the OWNER holds no property interest as stated above; the OWNER shall confirm in writing that the OWNER will relocate its own facilities at no cost to the DEPARTMENT or the CONTRACTOR.
4. All construction engineering and contract supervision shall be the responsibility of the DEPARTMENT and the CONTRACTOR to ensure that all utility work included in the contract is accomplished in accordance with the PROJECT's plans and specifications. The CONTRACTOR will consult with the OWNER before authorizing any changes or deviations which affect the OWNER's facility.
5. For utility work included in the contract, the CONTRACTOR shall ensure that the design/construction and installation of the OWNER'S facilities is performed by a contractor/design consultant pre-approved/registered with both the DEPARTMENT and the OWNER. For any work included in the contract, excluding water and sewer, the OWNER will provide a list of pre-approved/registered contractors/design consultants on page 6 of the MOU.
6. For Utility work included in the contract, the OWNER or the OWNER's Consultant shall have the right to visit and inspect the work at any time and advise the CONTRACTOR and the DEPARTMENT'S Engineer of any observed discrepancies or potential issues. The DEPARTMENT agrees to notify the OWNER when all utility work is completed and ready for final inspection by the OWNER.
7. Upon Maintenance Acceptance or Final Acceptance of the utility work included in the contract and upon certification by the DEPARTMENT'S Engineer and the OWNER that the work has been completed in accordance with the plans and specifications, the OWNER will accept the adjusted, relocated, and additional facilities and will thereafter operate and maintain said facilities located within the PROJECT right of way subject to the DEPARTMENT'S Utility Accommodations Policy and Standards Manual (UAM), current edition" and any agreements in effect without further cost to the DEPARTMENT or it's CONTRACTOR.
8. For the purpose of utility coordination, relocation and reimbursement matters, the OWNER shall cooperate with the CONTRACTOR in the same manner as if coordinating directly with the DEPARTMENT in accordance with the laws of the State of Georgia, the DEPARTMENT'S UAM and any agreements in effect between the DEPARTMENT and OWNER. The OWNER agrees to cooperate in good faith with the CONTRACTOR and to respond to all requests for information or meetings required to reach a resolution of any disputed items.

9. In accordance with the BUY AMERICA requirements of the Federal regulations (23 U.S.C. 313 and 23 CFR 635.410) all manufacturing processes for steel and iron products or predominantly of steel or iron (at least 90% steel or iron content) furnished for permanent incorporation into the work on this project shall occur in the United States. The only exception to this requirement is the production of pig iron and the processing, pelletizing and reduction of iron ore, which may occur in another country. Other than these exceptions, all melting, rolling, extruding, machining, bending, grinding, drilling, coating, etc. must occur in the United States.

    a. Products of steel include, but are not limited to, such products as structural steel piles, reinforcing steel, structural plate, steel culverts, guardrail, steel supports for signs, signals and luminaires, and cable wire/strand. Products of iron include, but are not limited to, such products as cast iron frames and grates and ductile iron pipe. Coatings include, but are not limited to, the applications of epoxy, galvanizing and paint. The coating material is not limited to this clause, only the application process.

    b. A Certificate of Compliance shall be furnished for steel and iron products as part of the backup information with the billing. The form for this certification entitled **"Buy America Certificate of Compliance"** is attached to this agreement as **"Exhibit A."** Records to be maintained by the RAILROAD/UTILITIES and the Department for this certification shall include a signed mill test report and/or a signed certification by a supplier, distributor, fabricator, or manufacturer that has handled the steel or iron product affirming that every process, including the application of a coating, performed on the steel or iron product has been carried out in the United States of America, except as allowed by this Section. The lack of these certifications will be justification for rejection of the steel and/or iron product or nonpayment of the work.

    c. The requirements of said law and regulations do not prevent the use of miscellaneous steel or iron components, subcomponents and hardware necessary to encase, assemble and construct the above products, manufactured products that are not predominantly steel or iron or a minimal use of foreign steel and iron materials if the cost of such materials used does not exceed one-tenth of one percent (0.1%) of the total contract price or $2,500.00, whichever is greater.

The Memorandum of Understanding will be incorporated into the project contract by reference or Exhibit.

APPROVED FOR THE OWNER BY:

Mark Tilden
(Signature)

MARK TILDEN
(Printed Name)

PROJECT MANAGER
(Title)

6-6-14
(Date)

APPROVED FOR THE DEPARTMENT BY:

Michael G. Holden
(Signature)

6-27-14
(Date)

STATE UTILITIES ENGINEER

Pre-Approved Contractor List

Company Name: SEE ATTACHED LIST
Address:
Phone:
Contact Person:
E-Mail:

Company Name:
Address:
Phone:
Contact Person:
E-Mail:

Company Name:
Address:
Phone:
Contact Person:
E-Mail:

Please provide a minimum of three.

Pre-Approved Design Consultant List

Company Name: SEE ATTACHED LIST
Address:
Phone:
Contact Person:
E-Mail:

Company Name:
Address:
Phone:
Contact Person:
E-Mail:

Company Name:
Address:
Phone:
Contact Person:
E-Mail:

All Pre-Approved Contractors/Consultants listed above must be Registered/Prequalified with the Department – Contractors must fill out one original DOT Form 478 and provide three reference letters. Send all documents to the: Georgia Department of Transportation, Office of Transportation Services – Contractor Prequalification, 600 West Peachtree Street, NW, 19th Floor, Atlanta, GA 30308

Please refer to the Department's website @ (http://www.dot.ga.gov/doingbusiness/prequalification) and follow instructions for contractor Registration/Prequalification

GEORGIA POWER COMPANY

Design Contractors				
Name	**Contact**	**Phone Number**	**Email**	**Address**
Direct Connect	Sam Rosamond	770-559-1297 678-836-3175	srosamond@reliabilitypartner.co mcastbiz.ne	3325 Garmon Drive, Loganville, GA 30052
UC / Synergetic	Mark Murray	770-835-0319	mmurray@ucsinc.com	1700 Water Place, Suite 100, Atlanta, GA
X-Line	L. Bryan Powell	770-459-5939	bryan.powell@x-lineinc.com	P.O.Box 1004, Villa Rica, GA 30180

Construction Contractors				
Name	**Contact**	**Phone Number**	**Email**	**Address**
Associated Diversified	Quentin Gillette Kelli James	(256) 351-8622	qgillette@wearediversified.com kjames@wearediversified.com	2910 Hwy 31 NW Hartselle, AL 35640
Dillard Smith	Barry Bartlett	(404) 761-7924	bbartlett@dillardsmith.com	560 Lake Mirror Road, College Park, Georgia 30349
MasTec	Ron Moody Ron Martin	850-562-2135	ron.moody@mastec.com ronnie.martin@mastec.com	800 S. Douglas Road, 12th Floor Coral Gables, FL 33134
Pike Electric	Todd Badgett Matt Simmons	333-719-4431 336-719-4508	tbadgett@pike.com msimmons@pike.com	P.O. Box 868,100 Pike Way Mount Airy, NC 27030
Service Electric	Jody Shea	(423) 265-3161 x102	jshea@serviceelectricco.com	1631 East 25th Street PO Box 3656 Chattanooga, TN 37404
Sumter Utilities	Mikell Murray	843-725-9521	jmmurray@suimail.com	1151 North Pike West Sumter, SC 29151
Utilicon	Jimmy Glover	(478) 348-3233	j.glover@utilicon.net	13275 Highway 231 Davisboro, Ga 31018
Williams	Rick Falls	704-484-1881	rick.falls@4weco.com	PO Box 2367 Shelby, NC 28151-2367

6/9/2014

Georgia DOT Project: Riverside @ I-285 Roundabouts
GDOT P.I. 0010925

DESIGN-BUILD
MEMORANDUM OF UNDERSTANDING
between the
Georgia Department of Transportation (hereafter the DEPARTMENT)
and
Level 3 (hereafter the OWNER)

Whereas the DEPARTMENT proposes to undertake a design-build project hereafter referred to as PROJECT # 0010925, Riverside @ I-285 Roundabouts in Fulton County, Georgia by contract through competitive bidding procedures; and,

Whereas the DEPARTMENT will accomplish the PROJECT through a Design Consultant, Design Consultant Team and/or Contractor hereafter referred to as CONTRACTOR; and,

Whereas, where OWNER has property rights ("Prior Rights") at the location of the PROJECT, OWNER will provide written evidence as to said prior rights within the area and will provide written documentation of prior rights relating to any individual crossing or Utility Facility, at the location of the PROJECT; and

Whereas, OWNER acknowledges that, generally, absent a showing of prior rights, the costs of relocation, protection, removal, or adjustment performed by OWNER shall be borne by OWNER; and

Whereas, pursuant to O.C.G.A. § 32-6-170(b), DEPARTMENT is authorized to pay or participate in the payment of the costs of relocation, protection, or adjustment of OWNER'S facilities where DEPARTMENT has made the determination that (i) such payments are in the best interest of the public and necessary in order to expedite the staging of the design-build project; and (ii) the costs of the removal, relocation, protection, or adjustment of such facilities are included as part of the Contract between the Department and the Department's roadway contractor for the design-build project; and

1. Type of Utility

OWNER has the following utility facilities which may need to be adjusted or relocated as a result of the proposed PROJECT:

Type of facility or facilities of OWNER:

_____ Domestic water mains and distribution lines and associated appurtenances
_____ Sanitary Sewer facilities and/or Storm Drainage System
_____ Electrical Distribution (overhead and underground) wires, poles, etc.
_____ Electrical Transmission (overhead and underground) wires, poles, etc.
_____ Natural Gas Distribution Facilities (underground)
_____ Natural Gas Transmission Facilities (underground)
_____ Petroleum Pipeline (underground)
_X_ Telecommunications facilities and equipment
_____ Cable TV facilities
_____ Street Lighting
_X_ Internet Data Service
_____ Other Facilities (Description) _____

2. New Utility Facilities Proposed (Betterment)

OWNER desires the following to be installed as new additional facilities within the PROJECT. Insert here or attach a detailed description of proposed new additional utility installations:

_____

_____

3. Assignment of Responsibilities for Design and Construction

This MEMORANDUM OF UNDERSTANDING and the following shall serve as a *basis* for assignment of responsibilities and costs for the DEPARTMENT to enter into a Standard Utility Agreement (SUA) or Contract Item Agreement (CIA), if necessary, with OWNER once the PROJECT is awarded to the CONTRACTOR. For a PROJECT implementation, GDOT will not have in its possession exact costing plans to be utilized to determine exact locations of the removal, relocation, protection, or adjustment. However, Overhead/Subsurface Utility Engineering (SUE) investigations plans exist providing the best information and signifying the layout of known existing facilities. Please use these plans for developing the final determination of services as indicated below. The CONTRACTOR developed plans will be provided to the OWNER after the design build project is awarded by GDOT which shall be used by the CONTRACTOR as the final basis for the SUA or CIA. **Betterment costs will be the OWNER'S responsibility.**

NOTE: Water and Sewer Design and Construction relocation work put in the contract will automatically be accomplished by the DEPARTMENT'S CONTRACTOR. The UTILITY OWNER will still have design approval authority. (No Pre-Approved Contractor/Consultant List required, leave page 6 blank). If you are a Water & Sewer Utility and choose to put your relocation Design and Construction in the contract, please check Design and Construction under Option 2 under 3B. Owner's electing to perform their own design, at their own cost, please select design under 3C.

OWNER hereby intends to:

3A. OWNER, at the DEPARTMENT'S cost, will provide the following services for the properties for which it has established prior rights (Check to signify):

Design _____
Construction _____

(3B.) OWNER, at the DEPARTMENT'S cost, for any removal, relocation, protection, adjustment and/or design (Regardless of Prior Rights) will allow their facilities to be placed into the DEPARTMENT'S contract for the following services pursuant to O.C.G.A. § 32-6-170(b). The DEPARTMENT will add the removal, relocation, protection, adjustment and/or design cost to the overall PROJECT's cost. (Check to signify):

Option 1: OWNER wants the work to be performed by the OWNER's pre-approved Design Consultants and/or Contractors.

Design X
Construction X

Option 2: OWNER wants the DEPARTMENT'S CONTRACTOR to perform the design and/or construction. (Check to signify):

Design ____
Construction ____ If both are checked, please leave page 6 blank.

As per this section, all work necessary for the removal, relocation, protection, or adjustment of the described utilities in accordance with the plans when approved shall be included in the project contract and accomplished by the CONTRACTOR except as follows (Check none or list any work items to be performed by the OWNER)

None _____

Excluded Items _____

Comments: _____

3C. OWNER, at OWNER'S cost, will provide the following services (Check to signify):

Design _____
Construction _____

The following is hereby mutually agreed to and understood by both parties:

1. The identification of existing facilities including preparation of Overhead/Subsurface Utility Engineering (SUE) investigations plans will be accomplished by the DEPARTMENT prior to award of the PROJECT and thereafter supplemented by the CONTRACTOR.
2. The CONTRACTOR shall coordinate reviews of the utility relocation information and obtain acceptance from the OWNER and DEPARTMENT when required. However; the OWNER shall apply for and obtain any required permits from the DEPARTMENT and perform any final design or proprietary design needed to administer its own relocation work if the work will not be included in the contract If the preliminary plans indicate that no conflict exists, and the OWNER concurs with this information, the OWNER shall provide a letter of "no conflict" to the CONTRACTOR.
3. After award of the PROJECT, the CONTRACTOR will research any claimed compensable property interest for each OWNER claiming prior rights under section 3A and present the findings to the DEPARTMENT and OWNER for approval. The plans and estimate for the utility work shall be subject to approval of both the DEPARTMENT and the OWNER prior to construction. If the OWNER chooses to perform it own relocations and the OWNER holds no property interest as stated above; the OWNER shall confirm in writing that the OWNER will relocate its own facilities at no cost to the DEPARTMENT or the CONTRACTOR.
4. All construction engineering and contract supervision shall be the responsibility of the DEPARTMENT and the CONTRACTOR to ensure that all utility work included in the contract is accomplished in accordance with the PROJECT's plans and specifications. The CONTRACTOR will consult with the OWNER before authorizing any changes or deviations which affect the OWNER's facility.
5. For utility work included in the contract, the CONTRACTOR shall ensure that the design/construction and installation of the OWNER'S facilities is performed by a contractor/design consultant pre-approved/registered with both the DEPARTMENT and the OWNER. For any work included in the contract, excluding water and sewer, the OWNER will provide a list of pre-approved/registered contractors/design consultants on page 6 of the MOU.
6. For Utility work included in the contract, the OWNER or the OWNER's Consultant shall have the right to visit and inspect the work at any time and advise the CONTRACTOR and the DEPARTMENT'S Engineer of any observed discrepancies or potential issues. The DEPARTMENT agrees to notify the OWNER when all utility work is completed and ready for final inspection by the OWNER.
7. Upon Maintenance Acceptance or Final Acceptance of the utility work included in the contract and upon certification by the DEPARTMENT'S Engineer and the OWNER that the work has been completed in accordance with the plans and specifications, the OWNER will accept the adjusted, relocated, and additional facilities and will thereafter operate and maintain said facilities located within the PROJECT right of way subject to the DEPARTMENT'S Utility Accommodations Policy and Standards Manual (UAM), current edition" and any agreements in effect without further cost to the DEPARTMENT or it's CONTRACTOR.
8. For the purpose of utility coordination, relocation and reimbursement matters, the OWNER shall cooperate with the CONTRACTOR in the same manner as if coordinating directly with the DEPARTMENT in accordance with the laws of the State of Georgia, the DEPARTMENT'S UAM and any agreements in effect between the DEPARTMENT and OWNER. The OWNER agrees to cooperate in good faith with the CONTRACTOR and to respond to all requests for information or meetings required to reach a resolution of any disputed items.
9. In accordance with the BUY AMERICA requirements of the Federal regulations (23 U.S.C. 313 and 23 CFR 635.410) all manufacturing processes for steel and iron products or predominantly of steel or iron (at

least 90% steel or iron content) furnished for permanent incorporation into the work on this project shall occur in the United States. The only exception to this requirement is the production of pig iron and the processing, pelletizing and reduction of iron ore, which may occur in another country. Other than these exceptions, all melting, rolling, extruding, machining, bending, grinding, drilling, coating, etc. must occur in the United States.

a. Products of steel include, but are not limited to, such products as structural steel piles, reinforcing steel, structural plate, steel culverts, guardrail, steel supports for signs, signals and luminaires, and cable wire/strand. Products of iron include, but are not limited to, such products as cast iron frames and grates and ductile iron pipe. Coatings include, but are not limited to, the applications of epoxy, galvanizing and paint. The coating material is not limited to this clause, only the application process.

b. A Certificate of Compliance shall be furnished for steel and iron products as part of the backup information with the billing. The form for this certification entitled **"Buy America Certificate of Compliance"** is attached to this agreement as **"Exhibit A."** Records to be maintained by the RAILROAD/UTILITIES and the Department for this certification shall include a signed mill test report and/or a signed certification by a supplier, distributor, fabricator, or manufacturer that has handled the steel or iron product affirming that every process, including the application of a coating, performed on the steel or iron product has been carried out in the United States of America, except as allowed by this Section. The lack of these certifications will be justification for rejection of the steel and/or iron product or nonpayment of the work.

c. The requirements of said law and regulations do not prevent the use of miscellaneous steel or iron components, subcomponents and hardware necessary to encase, assemble and construct the above products, manufactured products that are not predominantly steel or iron or a minimal use of foreign steel and iron materials if the cost of such materials used does not exceed one-tenth of one percent (0.1%) of the total contract price or $2,500.00, whichever is greater.

The Memorandum of Understanding will be incorporated into the project contract by reference or Exhibit.

APPROVED FOR THE OWNER BY:

M. A. Mayes — Oct 20, 2014

(Signature) (Date)

OSPE ATL

(Title)

APPROVED FOR THE DEPARTMENT BY:

Michael J. Kolkhorst — 10-27-14

(Signature) (Date)

STATE UTILITIES ENGINEER

Pre-Approved Contractor List

Company Name: Shiflett Enterprises
Address: Newan GA. 30263
Phone: 770-502-1565
Contact Person: Robert Shiflett
E-Mail: Shiflett@bellsouth.net

Company Name: Nextier Infrastructure Soulutions Inc
Address: 2300 Bethelvieus Road, Suite 110-417, Cummings GA. 30040
Phone: 770-617-7141
Contact Person: Joey Faircloth
E-Mail: Jf@nextier.com

Company Name: COMTRAN Group
Address: 5036 B.U. Bowman Dr. Buford, GA. 30518
Phone: 770-904-4444
Contact Person: Bryan Epperson
E-Mail: bryan.epperson@comtrangroup.com

Please provide a minimum of three.

Pre-Approved Design Consultant List

Company Name: Byers Engineering Company
Address: 6285 Barfield Rd., Fl 4th, ATL GA 30028
Phone: 404-497-1572 or 404-497-1943
Contact Person: Dan Clarke
E-Mail: Dan.Clarke@byers.com.

Company Name: Nextier Infrasture Soulutions Inc.
Address: 2300 Bethelvieus Road, Suite 110-417, Cummings GA 30040
Phone: 770-617-7141
Contact Person: Joey Faircloth
E-Mail: JF@nextier.com

Company Name: SourceOne Corp.
Address: 800 Kennesaw Ave. Suite 320, Marietta, GA. 30060
Phone: 678-594-5100
Contact Person: Beejee McGinty
E-Mail: beejee@sourceonecorp.com

GDOT Design-Build Project
Utility Analysis Preliminary Routing Report

Project Contact Person - Name Michael Mayes Phone (404) 394-0597 E-Mail michael.mayes@Level3.com
County: Fulton Project #: 0010925 Date 9/10/2014

Form Purpose

The purpose of this form is to provide proposing Design-Build teams with some additional information regarding possibly affected utilities. This form is in addition to SUE plans and MOUs; and is provided for information only. Days included in this form are Calendar Days. By providing as much of the requested information on one form below for each utility owner, it is expected to reduce some inquires made by the proposing Design-Build teams by providing consistent information to all proposed bidders.

Existing Conditions (Please complete additional forms for multiple facilities)

1. General locations, to include material sizes, casings and other pertinent information: _____
2. Has the SUE information been verified? ☐ No ☐ Yes
3. To the best of your knowledge are there any discrepancies in the SUE information? ☒ No ☐ Yes
   If so, please list: _____
4. To the best of your knowledge has anything been changed/added since SUE was completed? ☒ No ☐ Yes
   If yes please list: _____

Proposed Resolutions

1. Describe potential conflict points: NONE
2. Is there a potential for facilities to be retained? ☐ No ☒ Yes
3. Utility information was verified by: Utility Plat Maps/Records ☒ Yes ☐ No Field Located and Surveyed: ☒ Yes ☐ No
4. Will test holes be recommended? ☒ No ☐ Yes

Resolution Conditions (As Determined by the Utility Owner)

1. Utility Facility is in: ☐ GDOT R/W ☒ Other Public R/W ☐ Easement (attach) ☐ Not in R/W ☐ TBD
2. Seasonal and/or Contractual Limitations? ☒ No ☐ Yes If yes, Describe: _____
3. Do you have any material requirements? ☒ No ☐ Yes, list any utility owner material special requirements or comments:
   Who has material cost responsibility? Utility Owner ☒ DB Contractor ☐
4. Estimated number of days required to perform relocation activities: Design: 14 Days Construction: 21 Days
5. Are there Construction Details and/or design manuals unique to this location? ☒ No ☐ Yes, describe: _____
6. Utility facility can only be disconnected for: 2 ~~Days~~/Hours
7. Estimated Conceptual Cost: Design $ 5,000 + Construction $ 4,900 = $ 9,900.00
   (Please refer to the MOU for cost responsibility)

Comments Section/Notes: _____

Disclaimer: This form is provided for information only. All attempts have been made to provide reliable information based on the Design-Build costing plans or other Design-Build scoping documents. Refer to the contract documents, which include the Utility MOUs, for the scope of work and for specific contract requirements.

D.O.T. 66

DEPARTMENT OF TRANSPORTATION
STATE OF GEORGIA

INTERDEPARTMENT CORRESPONDENCE

FILE Fulton County
PI No. 0010925

Office Utilities- Atlanta

Date October 6, 2014

MJB

FROM Michael J. Bolden, State Utilities Engineer

TO Rachel Brown, District Engineer, Cartersville
Attn.: Patrick Allen, District Utilities Engineer

SUBJECT **Executed Memorandum of Understanding – Design Build**

Attached for your use are two copies (originals) of the Memorandums of Understanding (MOUs) for the above project which have been executed by the Department. Please forward one copy of the MOU to **Zayo Fiber Solutions**.

If you have any questions contact, Jun Birnkammer at 404-347-0606.

MB: LU: JB

Attachment

Georgia DOT Project: Riverside @ I-285 Roundabouts
GDOT P.I. 0010925

DESIGN-BUILD
MEMORANDUM OF UNDERSTANDING
between the
Georgia Department of Transportation (hereafter the DEPARTMENT)
and
Zayo Fiber Solutions (hereafter the OWNER)

Whereas the DEPARTMENT proposes to undertake a design-build project hereafter referred to as PROJECT # 0010925, Riverside @ I-285 Roundabouts in Fulton County, Georgia by contract through competitive bidding procedures; and,

Whereas the DEPARTMENT will accomplish the PROJECT through a Design Consultant, Design Consultant Team and/or Contractor hereafter referred to as CONTRACTOR; and,

Whereas, where OWNER has property rights ("Prior Rights") at the location of the PROJECT, OWNER will provide written evidence as to said prior rights within the area and will provide written documentation of prior rights relating to any individual crossing or Utility Facility, at the location of the PROJECT; and

Whereas, OWNER acknowledges that, generally, absent a showing of prior rights, the costs of relocation, protection, removal, or adjustment performed by OWNER shall be borne by OWNER; and

Whereas, pursuant to O.C.G.A. § 32-6-170(b), DEPARTMENT is authorized to pay or participate in the payment of the costs of relocation, protection, or adjustment of OWNER'S facilities where DEPARTMENT has made the determination that (i) such payments are in the best interest of the public and necessary in order to expedite the staging of the design-build project; and (ii) the costs of the removal, relocation, protection, or adjustment of such facilities are included as part of the Contract between the Department and the Department's roadway contractor for the design-build project; and

1. Type of Utility

OWNER has the following utility facilities which may need to be adjusted or relocated as a result of the proposed PROJECT:

Type of facility or facilities of OWNER:
_____Domestic water mains and distribution lines and associated appurtenances
_____Sanitary Sewer facilities and/or Storm Drainage System
_____Electrical Distribution (overhead and underground) wires, poles, etc.
_____Electrical Transmission (overhead and underground) wires, poles, etc.
_____Natural Gas Distribution Facilities (underground)
_____Natural Gas Transmission Facilities (underground)
_____Petroleum Pipeline (underground)
___x___Telecommunications facilities and equipment
_____Cable TV facilities
_____Street Lighting
_____Internet Data Service
_____Other Facilities (Description) _____

2. New Utility Facilities Proposed (Betterment)

OWNER desires the following to be installed as new additional facilities within the PROJECT. Insert here or attach a detailed description of proposed new additional utility installations:

_____

_____

3. Assignment of Responsibilities for Design and Construction

This MEMORANDUM OF UNDERSTANDING and the following shall serve as a *basis* for assignment of responsibilities and costs for the DEPARTMENT to enter into a Standard Utility Agreement (SUA) or Contract Item Agreement (CIA), if necessary, with OWNER once the PROJECT is awarded to the CONTRACTOR. For a PROJECT implementation, GDOT will not have in its possession exact costing plans to be utilized to determine exact locations of the removal, relocation, protection, or adjustment. However, Overhead/Subsurface Utility Engineering (SUE) investigations plans exist providing the best information and signifying the layout of known existing facilities. Please use these plans for developing the final determination of services as indicated below. The CONTRACTOR developed plans will be provided to the OWNER after the design build project is awarded by GDOT which shall be used by the CONTRACTOR as the final basis for the SUA or CIA. **Betterment costs will be the OWNER'S responsibility.**

NOTE: Water and Sewer Design and Construction relocation work put in the contract will automatically be accomplished by the DEPARTMENT'S CONTRACTOR. The UTILITY OWNER will still have design approval authority. (No Pre-Approved Contractor/Consultant List required, leave page 6 blank). If you are a Water & Sewer Utility and choose to put your relocation Design and Construction in the contract, please check Design and Construction under Option 2 under 3B. Owner's electing to perform their own design, at their own cost, please select design under 3C.

OWNER hereby intends to:

3A. OWNER, at the DEPARTMENT'S cost, will provide the following services for the properties for which it has established prior rights (Check to signify):

Design _____
Construction _____

3B. OWNER, at the DEPARTMENT'S cost, for any removal, relocation, protection, adjustment and/or design (Regardless of Prior Rights) will allow their facilities to be placed into the DEPARTMENT'S contract for the following services pursuant to O.C.G.A. § 32-6-170(b). The DEPARTMENT will add the removal, relocation, protection, adjustment and/or design cost to the overall PROJECT's cost. (Check to signify):

Option 1: OWNER wants the work to be performed by the OWNER's pre-approved Design Consultants and/or Contractors.

Design ___x__
Construction __x___

Option 2: OWNER wants the DEPARTMENT'S CONTRACTOR to perform the design and/or construction. (Check to signify):

Design ____
Construction ____ **If both are checked, please leave page 6 blank.**

As per this section, all work necessary for the removal, relocation, protection, or adjustment of the described utilities in accordance with the plans when approved shall be included in the project contract and accomplished by the CONTRACTOR except as follows (Check none or list any work items to be performed by the OWNER)

None _____

Excluded Items _____
_____
_____

Comments:_____
_____
_____
_____
_____
_____
_____

3C. OWNER, at OWNER'S cost, will provide the following services (Check to signify):

Design _____
Construction _____

The following is hereby mutually agreed to and understood by both parties:

1. The identification of existing facilities including preparation of Overhead/Subsurface Utility Engineering (SUE) investigations plans will be accomplished by the DEPARTMENT prior to award of the PROJECT and thereafter supplemented by the CONTRACTOR.
2. The CONTRACTOR shall coordinate reviews of the utility relocation information and obtain acceptance from the OWNER and DEPARTMENT when required. However; the OWNER shall apply for and obtain any required permits from the DEPARTMENT and perform any final design or proprietary design needed to administer its own relocation work if the work will not be included in the contract If the preliminary plans indicate that no conflict exists, and the OWNER concurs with this information, the OWNER shall provide a letter of "no conflict" to the CONTRACTOR.
3. After award of the PROJECT, the CONTRACTOR will research any claimed compensable property interest for each OWNER claiming prior rights under section 3A and present the findings to the DEPARTMENT and OWNER for approval. The plans and estimate for the utility work shall be subject to approval of both the DEPARTMENT and the OWNER prior to construction. If the OWNER chooses to perform it own relocations and the OWNER holds no property interest as stated above; the OWNER shall confirm in writing that the OWNER will relocate its own facilities at no cost to the DEPARTMENT or the CONTRACTOR.
4. All construction engineering and contract supervision shall be the responsibility of the DEPARTMENT and the CONTRACTOR to ensure that all utility work included in the contract is accomplished in accordance with the PROJECT's plans and specifications. The CONTRACTOR will consult with the OWNER before authorizing any changes or deviations which affect the OWNER's facility.
5. For utility work included in the contract, the CONTRACTOR shall ensure that the design/construction and installation of the OWNER'S facilities is performed by a contractor/design consultant pre-approved/registered with both the DEPARTMENT and the OWNER. For any work included in the contract, excluding water and sewer, the OWNER will provide a list of pre-approved/registered contractors/design consultants on page 6 of the MOU.
6. For Utility work included in the contract, the OWNER or the OWNER's Consultant shall have the right to visit and inspect the work at any time and advise the CONTRACTOR and the DEPARTMENT'S Engineer of any observed discrepancies or potential issues. The DEPARTMENT agrees to notify the OWNER when all utility work is completed and ready for final inspection by the OWNER.
7. Upon Maintenance Acceptance or Final Acceptance of the utility work included in the contract and upon certification by the DEPARTMENT'S Engineer and the OWNER that the work has been completed in accordance with the plans and specifications, the OWNER will accept the adjusted, relocated, and additional facilities and will thereafter operate and maintain said facilities located within the PROJECT right of way subject to the DEPARTMENT'S Utility Accommodations Policy and Standards Manual (UAM), current edition" and any agreements in effect without further cost to the DEPARTMENT or it's CONTRACTOR.
8. For the purpose of utility coordination, relocation and reimbursement matters, the OWNER shall cooperate with the CONTRACTOR in the same manner as if coordinating directly with the DEPARTMENT in accordance with the laws of the State of Georgia, the DEPARTMENT'S UAM and any agreements in effect between the DEPARTMENT and OWNER. The OWNER agrees to cooperate in good faith with the CONTRACTOR and to respond to all requests for information or meetings required to reach a resolution of any disputed items.
9. In accordance with the BUY AMERICA requirements of the Federal regulations (23 U.S.C. 313 and 23 CFR 635.410) all manufacturing processes for steel and iron products or predominantly of steel or iron (at

least 90% steel or iron content) furnished for permanent incorporation into the work on this project shall occur in the United States. The only exception to this requirement is the production of pig iron and the processing, pelletizing and reduction of iron ore, which may occur in another country. Other than these exceptions, all melting, rolling, extruding, machining, bending, grinding, drilling, coating, etc. must occur in the United States.

a. Products of steel include, but are not limited to, such products as structural steel piles, reinforcing steel, structural plate, steel culverts, guardrail, steel supports for signs, signals and luminaires, and cable wire/strand. Products of iron include, but are not limited to, such products as cast iron frames and grates and ductile iron pipe. Coatings include, but are not limited to, the applications of epoxy, galvanizing and paint. The coating material is not limited to this clause, only the application process.

b. A Certificate of Compliance shall be furnished for steel and iron products as part of the backup information with the billing. The form for this certification entitled **"Buy America Certificate of Compliance"** is attached to this agreement as **"Exhibit A."** Records to be maintained by the RAILROAD/UTILITIES and the Department for this certification shall include a signed mill test report and/or a signed certification by a supplier, distributor, fabricator, or manufacturer that has handled the steel or iron product affirming that every process, including the application of a coating, performed on the steel or iron product has been carried out in the United States of America, except as allowed by this Section. The lack of these certifications will be justification for rejection of the steel and/or iron product or nonpayment of the work.

c. The requirements of said law and regulations do not prevent the use of miscellaneous steel or iron components, subcomponents and hardware necessary to encase, assemble and construct the above products, manufactured products that are not predominantly steel or iron or a minimal use of foreign steel and iron materials if the cost of such materials used does not exceed one-tenth of one percent (0.1%) of the total contract price or $2,500.00, whichever is greater.

The Memorandum of Understanding will be incorporated into the project contract by reference or Exhibit.

APPROVED FOR THE OWNER BY:

_____ ____9/10/14_____
(Signature) (Date)

_____Construction Manager_____

(Title)

APPROVED FOR THE DEPARTMENT BY:

_____ 10-7-14
(Signature) (Date)

STATE UTILITIES ENGINEER

Pre-Approved Contractor List

Company Name: New Wave Fiber Construction
Address: 15 Lofty Pine Rd Rockmart GA
Phone: 678 637 1945
Contact Person: Denny Mccmillion
E-Mail: mcmillondenny@yahoo.com

Company Name: Comtran Group
Address: 5036 BU Bowman Drive Buford, GA
Phone: 770 377 4165
Contact Person Bryan Epperson:
E-Mail: bryanepperson@comtrangroup.com

Company Name: Shiflett Enterprises
Address: 56 Pine Road Newnan GA
Phone: 770 502 1576
Contact Person: Bobby Shiflett
E-Mail: shifent@bellsouth.net

Please provide a minimum of three.

Pre-Approved Design Consultant List

Company Name: Nextier Infrastuctor Solutions
Address: 2300 Bethelview Road Suite 110 Cumming GA
Phone: 770 855 1626
Contact Person: Dave Clark
E-Mail: dc@nextieris.com

Company Name: Byers Engineering
Address: 6285 Barfield Road Atlanta GA
Phone: 404 843 1000
Contact Person: Tommy Foster
E-Mail: kelvin.armstrong@beyers.com

Company Name: Shiflett Enterprises
Address: 56 Pine Road Newnan GA
Phone: 770 502 1576
Contact Person: Bobby Shiflett
E-Mail: shifent@bellsouth.net

GDOT Design-Build Project
Utility Analysis Preliminary Routing Report

Project Contact Person - Name Todd Swafford Phone 678 790 8639 E-Mail todd.swafford
County: Fulton Project #: 0010925 Date 9/10/14

Form Purpose

The purpose of this form is to provide proposing Design-Build teams with some additional information regarding possibly affected utilities. This form is in addition to SUE plans and MOUs; and is provided for information only. Days included in this form are Calendar Days. By providing as much of the requested information on one form below for each utility owner, it is expected to reduce some inquires made by the proposing Design-Build teams by providing consistent information to all proposed bidders.

Existing Conditions (Please complete additional forms for multiple facilities)

1. General locations, to include material sizes, casings and other pertinent information: (2) 1.5" underground conduits south of 285 along Riverside Drive.
2. Has the SUE information been verified? ☐ No ■ Yes
3. To the best of your knowledge are there any discrepancies in the SUE information? ■ No ☐ Yes
   If so, please list: _____
4. To the best of your knowledge has anything been changed/added since SUE was completed? ■ No ☐ Yes
   If yes please list: _____

Proposed Resolutions

1. Describe potential conflict points: _____
2. Is there a potential for facilities to be retained? ☐ No ■ Yes
3. Utility information was verified by: Utility Plat Maps/Records ■ Yes ☐ No Field Located and Surveyed: ■ Yes ☐ No
4. Will test holes be recommended? ☐ No ■ Yes

Resolution Conditions (As Determined by the Utility Owner)

1. Utility Facility is in: ■ GDOT R/W ☐ Other Public R/W ■ Easement (attach) ☐ Not in R/W ☐ TBD
2. Seasonal and/or Contractual Limitations? ■ No ☐ Yes If yes, Describe: _____
3. Do you have any material requirements? ■ No ☐ Yes, list any utility owner material special requirements or comments:
   Who has material cost responsibility? Utility Owner ☐ DB Contractor ■
4. Estimated number of days required to perform relocation activities: Design: 5 Days Construction: 21 Days
5. Are there Construction Details and/or design manuals unique to this location? ■ No ☐ Yes, describe: _____
6. Utility facility can only be disconnected for: 0 Days/Hours
7. Estimated Conceptual Cost: Design $ 2500.00 + Construction $ 22500.00 = $ 25000.00
   (Please refer to the MOU for cost responsibility)

Comments Section/Notes: _____

Disclaimer: This form is provided for information only. All attempts have been made to provide reliable information based on the Design-Build costing plans or other Design-Build scoping documents. Refer to the contract documents, which include the Utility MOUs, for the scope of work and for specific contract requirements.

Georgia Department of Transportation
Technical Provisions

I-285 Ramps at CR 209/ Riverside Drive Project

P.I. No. 0010925

Attachment 6-2

Special Provision 660 - Sewer

Revised: June 27, 2014

DEPARTMENT OF TRANSPORTATION
STATE OF GEORGIA

SPECIAL PROVISION

PROJECT: I-285 Ramps at CR 209/ Riverside Drive Project

COUNTY: Fulton County

P.I.: 0010925

Section 660—Sanitary Sewers

Delete Section 660 and substitute the following:

660.1 General Description

This Work consists of furnishing materials, labor, tools, equipment, and other items necessary for installing, removing, abandoning, relocating, and adjusting sanitary sewer and force main systems and appurtenances to the Plans and Specifications.

660.1.01 Definitions

A. General Provisions 101 through 150

B. Whenever the term "Utility Owner" is used in this Special Provision and its related documents, it shall be understood to mean "The Facility Owner" and its subsidiaries, successors and/or assignees.

C. The term "Project Manager" shall mean the authorized individual having the authority to give instructions pertaining to the work and to approve or reject the work. The "Project Manager" shall not however be authorized to revoke, alter, enlarge, relax, or release any requirements of the Contract, Plans, and Specifications, nor shall they act as an agent for the Contractor. All Contract items pertaining to the Utility Owner shall be coordinated with the Georgia Department of Transportation's (GDOT) Project Coordinator and the Utility Owner.

660.1.02 Related References

A. Standard Specifications

Section 104—Scope of Work
Section 107—Legal Regulations and Responsibility to the Public

Section 108—Prosecution and Progress

Section 205—Roadway Excavation

Section 207—Excavation and Backfill for Minor

Structures Section 400—Hot Mix Asphaltic Concrete

Construction Section 444—Sawed Joints in Existing

Pavements

Section 500—Concrete Structures

Section 600—Controlled Low Strength Flowable Fill

Section 615—Jack or Boring Pipe

Section 611—Relaying, Reconstructing, or Adjusting to Grade of Miscellaneous Roadway Structures

Section 668—Miscellaneous Drainage Structures

Section 801—Fine Aggregate

Section 810—Roadway Materials

B. Related Documents

1. General Provisions 101 through 150.
2. All products supplied and all work performed shall be in accordance with The Facility Owner's Standard Specifications, applicable standards from American Society for Testing and Material (ASTM), American Water Works Association (AWWA), American National Standards Institute (ANSI), GDOT Utility Accommodation Policy and Standards, and the Georgia Environmental Protection Division (EPD) Guidelines for Sewage Collection Systems. Latest revisions of all standards shall apply.

660.1.03 Submittals

A. General Provisions 101 through 150.

B. Refer to The Facility Owner's Standard Specifications, current published edition, for sanitary sewer utility submittal requirements. Copies of all submittals and documentation shall be submitted to GDOT, who shall distribute to the Utility Owner.

C. Shop Drawings / Product Data

1. Submit 6 copies of the following submittals to the GDOT Project Coordinator:
   a. Product data, including size, dimension, capacity, pressure rating, accessories, and special features, installation instructions, and operating characteristics for all proposed materials to show compliance with the requirements of this Special Provision.
   b. Test reports specified in the Quality Acceptance section of this Special Provision.
   c. Pipe manufacturer certification of compliance with specifications.
   d. Operation and maintenance literature, warranties, and other specified information.

D. Construction Record Documentation

1. The Contractor shall record on two set of utility as-built drawings that will record changes and deviations from the Contract Drawings in sizes, lines or grade. Record also the exact final horizontal and vertical locations of underground utilities and appurtenances to an accuracy of +/- 0.2ft, referenced to permanent surface improvements. Drawings shall utilize State Plane Coordinates and shall be legibly marked to record actual construction and submitted to the GDOT no later than 30 days after installation and prior to Final Acceptance of the Project. The Utility Owner shall determine if the utility record drawings are complete prior to Final Acceptance of the project.
2. Record Drawings shall be signed and sealed by a professional engineer or land surveyor registered in the State of Georgia.
3. Record Drawings shall also be submitted in digital format as indicated in accordance with the Department's current Electronic Utility File Guidelines.
4. Except for standard bound materials, bind all 8.5"x11" (A4) documentation, including 11" x 17" (A3) drawings folded to 8.5"x11" (A4), in logical groupings in loose-leaf binders of either the 3-ring or plastic slide-ring type. Permanently and appropriately label each such bound grouping of documentation.

660.1.04 Quality Assurance

A. The Contractor shall comply with applicable codes, ordinances, rules, regulations and laws of local, municipal, state or federal authorities having jurisdiction over the Project.

B. Furnish manufactured items, pipe, fittings, valves, service components, and appurtenances from manufacturers having regularly produced such items as specified herein which have proven satisfactory in actual service, over at least a 2-year

period, or as approved by the GDOT and Utility Owner.

C. Regardless of tolerances permitted by industry standards specified herein, GDOT Project Manager may reject pipe or appurtenances at the manufacturing plant or project site which have cracks, chips, blisters, rough interior or exterior surface, evidence of structural weakness, joint defects, or other imperfections that might in the opinion of the Project Coordinators contribute to reduced functional capability, accelerated deterioration or reduced structural strength.

D. The Utility Owner and the Utility Owner's consultant shall have the right to visit and inspect the work at any time. The Utility Owner may also have an Inspector assigned to the project authorized to inspect portions or all of the utility work done and the preparation, fabrication, or manufacture of the materials to be used. The Utility Owner shall be able to advise GDOT Project Manager of any observed discrepancies or potential problems. The cost of these inspections shall be the responsibility of the Utility Owner.

E. GDOT shall notify the Utility Owner before authorizing any changes or deviations which might affect the Utility Owner's facilities. Contractor shall notify GDOT and Utility Owner a minimum of 24 hours prior to beginning work on utilities.

F. The Utility Owner shall be notified by GDOT Project Manager when all utility work is complete and ready for final inspection. The Utility Owner shall be invited to attend the final inspection and may provide a corrections list to GDOT Project Manager prior to the final inspection.

G. The Contractor shall verify the actual location and depth of all utilities prior to construction. All utilities and structures shall be protected during construction. Any damaged facilities shall be repaired or replaced at the Contractor's expense.

660.2 Materials

H. All materials provided shall be in conformance with the requirements and standards set forth in the The Facility Owner's specification document, current published edition.

660.2.01 Sanitary Sewer Piping Systems and Appurtenances

A. Ductile Iron Pipe and Fittings

Ductile iron pipe shall meet the latest edition of ANSI/AWWA C150/A21.50 and C151/A21.51 for the class and joint specified with a nominal laying length of 18 (5.5 m) to 20 feet (6 m). Joints for buried ductile iron pipe shall be mechanical or push-on joints. Unless specified otherwise in the Plans or The Facility Owner's Standard Specifications, ductile iron pipe diameters 12 inch (300 mm) or less shall be minimum Pressure Class 350, while pipe diameters greater than 12 inch (300 mm) shall be minimum Pressure Class 250.

1. Ductile iron pipe for the interior of structures and above ground installations shall be flanged. Flanges shall be ductile iron and shall be threaded-on flanges conforming to ANSI/AWWA C115/A21.15 or cast-on flanges conforming to ANSI/AWWA C110/A21.10. The minimum class thickness for ductile iron flanged pipe to be threaded is Class 53.
2. Interior surfaces of ductile iron pipe and fittings shall be ceramic epoxy lined. Epoxy lining shall be 40-mil nominal dry film thickness. The interior of the ductile iron pipe and fittings shall not have been lined with any substance prior to the application of the specified lining material and no coating shall have been applied to the first 6 inches (150 mm) of the exterior of the spigot ends. The lining shall be applied by a competent firm with a successful history of applying linings to the interior of ductile iron pipe and fittings. Surface preparation, lining of pipe, coating of bell sockets and spigot ends, number of coats, and touch up and repair shall be in accordance with the manufacturer's recommendations. The pipe or fitting manufacturer shall supply a certificate attesting that the applicator met the requirements of this specification; that the material used was as specified; that the linings have the nominal dry film thickness specified; and that the linings have no pinholes when tested with a nondestructive 2,500 volt test. Lined pipe and fittings shall be handled only from the outside of the pipe and fittings.
3. Ductile iron shall have an exterior asphaltic coating as specified in AWWA C151 for ductile iron pipe and AWWA C153/C110 for ductile iron fittings.
4. Buried ductile iron pipe and fittings shall be polyethylene encased at locations indicated on the Plans or as conditions warrant. Polyethylene encasement tubing shall be in accordance with ANSI/AWWA C105/A21.5 and ASTM A674 and shall have a minimum thickness of 8 mils. Polyethylene tubing shall be green in color to designate wastewater.

5. Fittings: Ductile iron fittings shall be epoxy coated and meet the requirements of ANSI/AWWA C153/A21.53 or ANSI/AWWA C110 A21.10 with a minimum pressure rating of 250 psi. Pressure pipe fittings shall be restrained mechanical joint.
6. Mechanical Joint Fittings: Mechanical joints consisting of bell, socket, gland, gasket, bolts, and nuts shall conform to ANSI/AWWA C111/A21.11.
7. Push-On Joints: Push-on joints shall be designed in accordance with ANSI/AWWA C111/A21.11. Joint lubrication shall be as furnished by the manufacturer.
8. Rubber gasket joints for push-on or mechanical joints shall conform to the requirements of ANSI/AWWA C111/A21.11.
9. Restrained Joints: Restrained joints shall be provided as shown on the Plans and where required for thrust restraint. Restrained joints shall not require field welding or grooves cut into the pipe barrel for restraint. The restraining joints for mechanical joint fittings shall conform to the requirements of ANSI/AWWA C111/A21.11 with assembly in conformance with AWWA C600 and manufacturer's recommendations. Restrained joints for pipe shall be mechanical joints with ductile iron retainer or push-on type joints and shall have a minimum rated working pressure of 250 psi.
10. Mechanical joint retainer glands may be used to restrain mechanical joint pipe and fittings to the plain end of ductile iron pipe and fittings. Restrainer glands shall be manufactured of ductile iron per ASTM A536.
11. Corrosion-resistant bolts used with ductile iron joints shall be high-strength, low-alloy steel as specified in ANSI/AWWA C111/A21.11.
12. Welded Outlets: Welded outlets in ductile iron pipe shall be provided where specified and indicated on the Plans. Outlets shall be fabricated by welding sections of ductile iron pipe manufactured in accordance with ANSI/AWWA C151/A21.51. Welded outlet pipe shall be fabricated only by the pipe manufacturer. The minimum ductile iron pipe thickness for fabrication of welded outlet pipe shall be Thickness Class 53 for 4 inch to 54 inch (100 mm to 1350 mm) diameter pipe. All joints on welded-on branch outlets shall be provided in accordance with the latest revision of ANSI/AWWA C111/A21.11 and/or ANSI/AWWA C115/A21.15 as applicable. After the outlets are welded together and prior to finishing, the assembly shall be subjected to a 15 psi air test for leakage. The maximum size and laying length of the welded-on branch outlet shall be recommended by the pipe manufacturer and acceptable to the Utility Owner for the field conditions and connecting pipe or valve.

B. Polyvinyl Chloride (PVC) Pipe

1. C900 PVC pipe diameters 4-inch (100 mm) through 12-inch (300 mm) shall meet ANSI/AWWA C900 requirements, and shall be a minimum pipe dimension ratio (DR) 18, Pressure Class 235 psi. C905 PVC pipe diameters 14-inch (350 mm) and greater shall meet ANSI/AWWA C905 requirements, shall be DR 18 minimum, Pressure Class 235 psi. Pipe shall have a bell with an integral wall section with a factory installed, solid cross section elastomeric ring in accordance with ASTM F477.
2. PVC solid wall gravity sewer pipe shall be integral bell and spigot joint pipe, and shall comply with ASTM D3034 for pipes 15-inch (380 mm) and smaller, with minimum standard dimension ratio (SDR) 26. Pipes larger than 15-inch shall comply with ASTM F679 with the minimum thickness as specified in the Plans or The Facility Owner's specification document. Joints shall be of the bell and spigot gasketed type in accordance with ASTM D3212 and ASTM F477.
3. All PVC pipe shall be formulated for sunlight exposure and shall be green in color to designate wastewater.
4. PVC pipe shall have the same outside diameter (OD) as ductile iron pipe and be compatible for use with ductile iron fittings.
5. Fittings for PVC pipe 4 inches (100 mm) and larger shall be ductile iron mechanical joint and comply with the requirements set forth in the specifications for Ductile Iron Pipe and Fittings.
6. Restrained Joints: Restrained joints shall be provided as shown on the Plans and where required for thrust restraint. Restrained joints shall comply with the requirements set forth in the specifications for Ductile Iron Pipe

and Fittings, with assembly in conformance with AWWA C600 and manufacturer's recommendations.

7. Unless specified otherwise in the Plans or The Facility Owner's specification document, 2-inch (50 mm) and 3-inch (80 mm) diameter PVC pipe shall conform to the requirements of ASTM D2241 Class 1120 or 1220 (SDR 21) with a working pressure rating of 200 psi with integral bell gasketed joints. Pipe is to be manufactured to IPS standard pipe equivalent outside diameters.
8. Schedule 80 PVC pipes smaller than 4-inch (100 mm) nominal diameter shall be in accordance with ASTM D1785. Schedule 80 pipe shall have threaded joints. Solvent cemented joints shall not be used. Threaded type fittings for Schedule 80 PVC pipe shall be in conformance with ASTM D2464. All threaded joints shall be watertight.
9. Flanges for Schedule 80 PVC pipe shall be rated for a 150 psi working pressure with ANSI B16.1 dimensions and bolting pattern. Flanges shall be connected to PVC piping with threaded joints in accordance with ASTM D2467 or ASTM 2464, respectively.

C. Fusible PVC Pipe

1. Fusible PVC pipe sizes 4-inch (100 mm) to 36-inch (900 mm) shall conform to AWWA C900/C905 as applicable and follow the dimension ratios (DR) set forth in the requirements listed for C900 PVC pipe.
2. Fusible PVC pipe shall be green in color to designate wastewater.
3. Fusible PVC pipe shall be extruded with plain ends. The ends shall be square to the pipe and free of any bevel or chamfer. There shall be no bell or gasket of any kind incorporated into the pipe.
4. Fusible PVC pipe shall be manufactured in a standard 40-foot nominal length or custom lengths as specified.
5. Joints shall be made by butt fusing sections of pipe with manufacturer-approved equipment.
6. Fittings shall be ductile iron mechanical joint and comply with the requirements set forth in the specifications for Ductile Iron Pipe and Fittings.

D. High Density Polyethylene (HDPE) Pipe

HDPE pipe sizes 4-inch (100 mm) and larger shall be a PE 4710/3408 high density, extra-high molecular weight polyethylene manufactured from first-quality high density polyethylene resin containing no additives, fillers, or extenders. The HDPE pipe shall have an ASTM D3350 cell classification of PE 445574C, and shall meet the requirements of AWWA C906, and shall be sized based upon the ductile iron pipe size (DIPS), outside diameter (OD) sizing system. HDPE shall be a minimum DR 11, pressure class 160 psi. For gravity sewer pipe, the DR of the pipe shall be as indicated in the Plans or The Facility Owner's Standard Specifications.

1. HDPE pipe shall be green or marked with a permanent green stripe to designate wastewater.
2. Joints shall be made by butt fusing sections of pipe with manufacturer-approved equipment.
3. Fittings shall be ductile iron mechanical joint meeting the requirements of ANSI/AWWA C110/A21.10 and ANSI/AWWA C111/A21.11.
4. The pipe shall have fusion welded restrainer ring, follower gland, and a 12-inch (300 mm) stainless steel insert for the mechanical joint connection.
5. HDPE sewer mains shall be properly sized utilizing the inside diameter of the nominal pipe diameter. If during construction HDPE is substituted for other pipe materials, the Contractor shall verify that the inside diameter of the HDPE is the same or larger than the inside diameter of the pipe originally specified.

E. Concrete Pipe

1. Concrete pipe for gravity sewers shall be epoxy lined, reinforced concrete bell and spigot pipe with type two cement and calcareous aggregate conforming to ASTM C76 for Wall C pipe. Pipe shall be supplied in lengths of at least eight feet (2.5 m).
2. Pipe shall have rubber gasket type joints with steel end rings conforming to ASTM C443. A rectangular groove shall be supplied in the spigot end to receive the rubber gasket, and it shall be so formed to a rectangular shape and confined on all four sides. Bell and spigot surfaces shall be accurately formed and smooth to provide a close sliding fit with a nominal clearance of 1/16-inch (1.5 mm).

3. Pipe shall not have cracks, blisters, imperfect surfaces, damaged ends, or damaged gasket grooves. Repaired or patched pipe or pipe with repaired or patched gasket grooves or shoulders shall not be used.
4. The testing of concrete pipe for crushing strength, absorption, hydrostatic requirements, and permeability shall be at the direction of the Utility Owner / GDOT Project Coordinators and shall be performed in accordance with ASTM C497.

F. Steel Casing Pipe

1. All materials, design, fabrication, handling, and testing of steel casing pipe shall conform to the requirements of ASTM A139, AWWA C200 and AWWA Manual M11 "Steel Pipe – A Guide for Design and Installation."
2. Steel casing pipe shall be new, smooth-wall, carbon steel pipe conforming to ASTM Specification A139, Grade B with minimum yield strength of 35,000 psi. Steel casings shall be used with the size, minimum thickness, length, and coating specified on the Plans or The Facility Owner's specification document.
3. Additional anti-corrosion measures, as specified by the manufacturer or indicated on the Plans, shall be provided at connectors, couplings, rollers, restraints, etc.
4. Unless specified otherwise in the Plans or The Facility Owner's specification document, casing pipe end seals shall consist of ⅛-inch (6 mm) thick flexible synthetic rubber boot with adjustable stainless steel banding straps. The annular space of the casing shall not be filled with concrete or grout.
5. Casing spacers shall consist of a stainless steel shell, PVC ribbed liner, and non-conducting separators to keep the carrier pipe from touching the casing pipe. Spacers shall be provided at a maximum of 10-foot intervals and within 2 feet (0.6 m) of the end of the casing pipe.

G. Cured-In-Place-Pipe (CIPP) Liners

1. CIPP liners shall be installed at the locations indicated on the Plans for the renovation of existing sanitary sewer pipes. The CIPP process shall consist of furnishing and inserting a resin-impregnated flexible tube within an existing sanitary sewer pipe and permanently forming the tube to the original conduit by curing with hot water under hydrostatic pressure or by a compressed air/stream combination.
2. CIPP pipeliner components shall be made from approved materials and manufactured in accordance with ASTM F1216, ASTM F1743, ASTM D5813, and ASTM D790.
3. CIPP tube shall meet the following criteria:
4. Made up of one or more layers of felt fabric
5. Meets or exceed ASTM F1216 or ASTM F1743, Section 5
6. Withstands installation pressure and is strong enough to bridge missing pipe sections where necessary.
7. Stretches to fit irregular pipe sections
8. After wetout (impregnating of the tube with resin), shall maintain a uniform thickness meeting or exceeding the design thickness when compressed at installation pressures
9. Sewn to a size fitting tightly within the internal circumference and length of the original pipe when installed and shall provide required allowance for circumferential stretching during inversion
10. Does not utilize overlapping layers of felt in longitudinal seams causing lumps in the final product
11. Utilizes an impermeable, flexible membrane coated on the outside layer of the tube prior to wetout to contain the resin and facilitate monitoring of resin saturation during the wetout procedure
12. Is homogenous across the entire wall thickness and contains no intermediate or encapsulated elastomeric layers
13. Does not utilize material in the tube causing delamination in the CIPP pipeliner
14. Seams in the tube are stronger than the non-seamed felt
15. Outside of the tube is marked for distance at regular intervals along its length. Marking intervals do not exceed 5 feet (1.5 meters) and include the Manufacturers name or identifying symbol.
16. CIPP resin system shall produce CIPP pipeliners which comply with the structural and chemical resistance requirements of this specification. Resin system shall be corrosion resistant, consist of a vinyl ester and catalyst system, and contain 5% or less resin filler. When properly cured within the tube composite, the resin shall meet or exceed the requirements of ASTM F1216 and ASTM F1743, the physical properties herein, and those which are to

be utilized in the design of the CIPP liner.

17. CIPP pipeliners shall meet the following criteria:
18. Requirements of ASTM F1216, Appendix XI.
19. No bonding to original pipe wall assumed
20. Utilizes a long-term, time dependent flexural modulus value obtained from long-term testing results for flexural creep of the CIPP material installed by the installer on previous projects consisting of the same work
21. Utilizes a percentage of the instantaneous flexural modulus value as measured by ASTM D790 testing in design calculation for external buckling. Does not use values in excess of 50% unless substantiated by qualified independent testing laboratory data.
22. Produced using materials of equal quality or better than the materials used in the long-term test with respect to the initial flexural modulus used in design.
23. Utilizes an enhancement Factor "K" value of 7 for "partially deteriorated" design conditions. Does not use Enhancement (K) factors in excess of 7 unless substantiated by qualified independent testing laboratory data.
24. Produced with uniformly bonded layers. Any two layers cannot be cleanly separated with a probe or point of a knife blade or separated in a manner that allows the probe or knife to move freely between layers.
25. Produces with light, a reflective interior wall color to allow clear, detailed examination with closed circuit television inspection equipment.
26. Conforms to the structural properties listed in the following table:

MINIMUM STRUCTURAL PROPERTIES			
Property	**Test Method**	**Cured Composite per ASTM F1216**	**Cured Composite (400k Resin)**
Modulus of Elasticity	ASTM D790 (short term)	250,000 psi (1,722,500 kPa)	400,000 psi (2,756,000 kPa)
flexural Stress	ASTM D790	4,500 psi	4,500 psi
		(31,000 kPa)	(31,000 kPa)

a. Produced with a minimum wall thickness of ¼ in (6 mm) throughout the line. Wall thickness is based on the physical properties listed in the table above and the design equations in the appendix of ASTM F1216, using the design parameters listed in the following table:

DESIGN PARAMETERS	
Design Safety Factor	2.0
Retention Factor for Long-Term Flexural Modulus (determined by long-term testing described above)	1%-60%
Ovality	2%
Enhancement Factor, k	7

b. Layers of the tube not saturated with resin prior to insertion into the existing pipe are not included in the

structural CIPP pipeliner wall thickness computation.

c. Meets or exceeds chemical resistance requirements of ASTM F116, Appendix X2

d. Contains no dry or saturated layers

H. Pipe Detection Wire

Unless otherwise specified in the Plans or The Facility Owner's Standard Specifications, open cut installations of non-metallic pipe shall include minimum #12 gauge tracing wire. Pipe installed by directional drill shall include two (2) insulated 8 gauge tracer wire. Wire shall be solid copper insulated with HDPE installed along pipe, wrapped around service line stub outs and stubbed into valve boxes for locating purposes. Wire shall be properly spliced to provide continuous conductivity.

I. Warning Tape

Sanitary sewer mains shall be installed with polyethylene film warning tape manufactured for marking and identifying underground wastewater utilities. Tape shall be a minimum of 2 inches (50 mm) wide and 4 mils thick, green in color, with continuously printed letters reading "CAUTION BURIED SEWER LINE BELOW".

J. Gate Valves

1. Gate valves sizes 3-inch (80 mm) and larger shall be of the resilient seat type meeting the requirements of AWWA C509 or C515. Valves shall be iron body, bronze trimmed, with non-rising stems, and shall be fusion-bonded epoxy coated per ANSI/AWWA C550. Valves shall have a minimum design working pressure of 200 psi.

Valves shall be manually operated by nut and open counter-clockwise unless specified otherwise in the Plans or The Facility Owner's Standard Specifications.

2. The resilient seating arrangement shall provide zero leakage at the design working pressure when installed with line flow in either direction. All ferrous surfaces inside and outside shall have a fusion bonded epoxy coating. All valves shall be provided with O-ring seals. The design and machining of valves shall be such as to permit replacing the O-ring seals in the valves while in service without leakage.

3. All gate valves, when fully opened, shall have an unobstructed waterway diameter equal to or larger than the full nominal diameter of the valve.
4. In general, valves shall be designed for vertical installation. Valves installed in the horizontal position shall be provided with bevel gears, extended gear case, rollers, tracks, and scrapers.
5. Exposed or above-ground gate valves shall be outside screw and yoke (OS&Y) flanged joint type with an operating hand wheel. The face-to-face dimensions and drilling shall conform to ANSI B16.10 for Class 125 flanged joint end gate valves.
6. Valves shall include mechanical joints, bolts, glands, gaskets, and all other materials necessary to join to existing work.
7. Provide brass identification tag imprinted with "SEWER", valve size, valve type, and direction and number of turns to open. Provide a ¼-inch (8 mm) hole in the brass tag and attach the tag to the end of the locate wire (twist wire around tag). Tag shall be 2-inch (50 mm) diameter and ⅛-inch thick brass with a ¼-inch (8 mm) hole.

K. Insertion Valves

1. Insertion type valves shall be resilient wedge gate valves designed to be installed into an existing pressurized force main without interruption of flow through the pipe and no reduction of line pressure.
   a. Valve shall be fusion-bonded epoxy coated in compliance with AWWA C550.
   b. The construction of the resilient wedge shall comply with AWWA C509 requirements.
   c. The resilient wedge shall be fully encapsulated with EPDM rubber and shall seat on the valve body and not the pipe. The resilient wedge shall be totally independent of the carrier pipe.
   d. Valve shall be restrained to the pipe.
   e. Valves shall be suitable for operating pressures up to 250 psi.

L. Plug Valves

1. All plug valves shall be of the non-lubricated eccentric type with resilient faced plugs and shall comply with AWWA C517 requirements. The pipe connections shall be flanged or mechanical joint as required. Flanged valves shall be in accordance with ANSI B16.1, Class 125 and ANSI B16.5, Class 150. Mechanical joint valves shall be in accordance ANSI/AWWA C111/A21.11. Buried plug valves shall have mechanical joint ends. Valve and gearing shall be rated for a minimum of 150 psi pressure rating.
2. Valves shall be coated with an epoxy coating applied to both the exterior and the interior surfaces prior to assembly of the valves.
3. Unless specified otherwise in the Plans or The Facility Owner's Standard Specifications, the port area shall be 100% of standard full pipe area. The body of the valve shall be constructed of cast iron ASTM A126 Class B. Valves shall be furnished with permanently lubricated stainless steel or oil-impregnated bronze upper and lower plug stem bushings. These bearings shall comply with current AWWA Standards. Both nut and gear operated valves shall have a 2-inch (50 mm) square nut for operation.
4. Provide brass identification tag imprinted with "SEWER", valve size, valve type, and direction and number of turns to open. Provide a ¼-inch (8 mm) hole in the brass tag and attach the tag to the end of the locate wire (twist wire around tag). Tag shall be 2-inch (50 mm) diameter and ⅛-inch (6 mm) thick brass with a ¼-inch (8 mm) hole.

M. Check Valves

1. Swing check valves sizes 4-inch (100 mm) through 30-inch (750 mm) shall be constructed of a cast iron body with a bronze seat ring, and a noncorrosive shaft for attachment of weight and lever. Check valves shall comply with AWWA C508 requirements and have a 150 psi minimum pressure rating.
2. The valve disc shall swing completely clear of the waterway when valve is fully open, permitting full flow. The disc shall be cast iron, rubber faced.
3. Check valves shall be flanged in accordance with ANSI 16.1, Class 125, and installed inside a vault or pit.
4. Provide brass identification tag imprinted with "SEWER", valve size, valve type, and direction and number of turns to open. Provide a ¼-inch (8 mm) hole in the brass tag and attach the tag to the end of the locate wire (twist wire around tag). Tag shall be 2-inch (50 mm) diameter and ⅛-inch (6 mm) thick brass with a ¼-inch (8 mm) hole.

N. Tapping Sleeves and Valve Assembly

1. Tapping sleeves and valves sizes 4-inch (100 mm) and larger shall be stainless steel with wraparound gasket style, or ductile iron of the split-sleeve, mechanical joint type. Tapping sleeves shall be rated for a minimum 150 psi working pressure in accordance with ANSI/AWWA C110/A21.10.
2. When tapping an existing asbestos cement pipe, a stainless steel tapping sleeve which contains a full gasketed surface within the sleeve body shall be used due to variances in the manufactured outside diameter of the asbestos cement pipe.
3. Tapping sleeve shall have an outlet flange per ANSI B16.1, Class 125 standard.
4. The Contractor shall determine the outside diameter of the existing main before ordering the sleeve.
5. Tapping valves shall be mechanical joint outlet, non-rising stem, resilient seated gate valves meeting the applicable requirements of ANSI/AWWA C509/C515 and C550 with a minimum design working pressure of 200 psi.
6. Tapping valves shall be specifically designed for pressure tapping with sufficient seat opening to allow full diameter taps to be made.
7. Tapping valves shall be manufactured with an integral tapping flange having a raised lip design.
8. Tapping valves shall be furnished with a combination flange and mechanical joint for connecting the branch to the main.

O. Valve Boxes

1. All valves shall be equipped with valve boxes. The valve boxes shall be heavy, roadway type boxes. The valve box cover shall be marked "SEWER VALVE" or "SEWER".
2. Valve box materials shall conform to the requirements and standards set forth in The Facility Owner's Standard

Specifications.

3. The valve boxes shall be adjustable up or down from the nominal required cover over the pipe. Extensions shall be provided as necessary. A precast concrete ring shall be placed around the valve box opening when outside of paved areas.

4. Valves shall be furnished with extension stems as necessary to bring the operating nut to within 24 inches (600 mm) minimum of the top of the valve box.

P. Tapping Saddles

1. Tapping saddles shall have ductile iron or bronze body with stainless steel, double-tie straps and nuts with pressure rating not less than that of the pipe to which it is to be connected.
2. Saddles shall have a rubber gasket cemented to the body with compatible threading between the saddle and corporation stop. Saddles shall conform to ANSI/AWWA C800 standards.
3. The tapping saddle shall provide full support around the circumference of the pipe, providing a bearing area of sufficient width so that pipe will not distort when the saddle is tightened.

Q. Concrete Vault

1. Concrete vaults shall conform to the requirements and standards set forth in The Facility Owner's Standard Specifications and standard details.

R. Air Release Valves

1. Air release, air/vacuum valves, and combination air valves shall be suitable for use with wastewater and manufactured in compliance with ANSI/AWWA C512.
2. Air release valves shall have a small venting orifice to vent the accumulation of air and other gases in the line or system under pressure.
3. Air/vacuum valves shall have a large venting orifice to permit the release of air as the line is filling or relieve the vacuum as the line is draining or is under negative pressure
4. Combination air valves shall have operating features of both the air/vacuum valve and air release valve.
5. Valves shall be suitable for pressures up to 250 psi.
6. Air release, air/vacuum valves, and combination air valves shall conform to the requirements and standards set forth in The Facility Owner's Standard Specifications and standard details.

S. Thrust Collars and Thrust Blocks

1. Concrete used for thrust collars or thrust blocks on force mains shall meet the "Class A" requirements for concrete listed in Section 500.
2. Thrust collars shall include welded-on collars attached by the pipe manufacturer or retainer glands. Concrete shall be poured continuous around the pipe and bear against undisturbed earth.
3. Reinforcing steel shall meet the requirements set forth in the Plans or The Facility Owner's Standard Specifications.
4. Mechanical joint restraints shall be utilized in lieu of thrust blocks with the approval of the Utility Owner.

T. Manholes

1. Manholes shall be precast concrete or as indicated in the Plans and per The Facility Owner's Standard Specifications.

2. The minimum diameter for manholes shall be 48 inches (1200 mm). The minimum diameter for inside drop manholes shall be 60 inches 1500 mm). Manhole Types and Classes are described in Section 668.
3. Precast reinforced manholes shall be manufactured in accordance with ASTM C478 and shall have a minimum wall thickness of 5 inches (127 mm). All concrete shall have a minimum compressive strength of 4,000 psi when tested in accordance with ASTM C478.

4. The bases shall be monolithically cast and shall consist of a manhole bottom and a wall which shall extend a minimum of 6 inches (150 mm) above the top of the highest in-flowing sewer. The top of the base section shall be tongue and groove section.
5. There shall be a minimum distance of 6 inches (150 mm) between the invert of the lowest out flowing sewer and floor of the precast base to provide for the construction of a formed invert and bench wall within the manhole. There shall be a minimum 0.05-foot drop between the inlet and outlet inverts. Inverts shall be constructed of 4,000 psi plant mix concrete. Bench shape and discharge of force mains into manholes shall conform to the requirements of the Georgia EPD Guidelines for Sewage Collection Systems.
6. Joints between precast sections shall be sealed by means of rubber O-ring gaskets or flexible butyl rubber sealant.
7. Manholes shall have factory applied coatings on the interior and exterior. Surface preparation and coating application shall comply with the manufacturer's recommendations.
8. Manhole sections shall be rejected if abused during shipping or placement and if pipe openings are not properly aligned.
9. A protective coating or lining for corrosion protection shall be applied to all interior surfaces of manholes when called for in the Plans or The Facility Owner's Standard Specifications.
10. Pipe entry holes shall be either precast or cored. Connections between reinforced concrete manhole structures and sewer pipe shall be flexible connectors conforming to ASTM C 923 latest revision.
11. Frame and covers shall be cast or ductile iron and set in a bed of mortar on the top of the manhole and flush with finished grade. Covers shall be marked as indicated in the Utility Owner standard details.
12. Watertight manhole rings and covers are to be used if the manhole is located within the 100-year floodplain boundary or may be flooded by street runoff.
13. Riser adjusting rings shall be a minimum of 3 inches (80 mm) on cone sections. Manhole adjustment rings shall be sealed with a flexible rubber seal.
14. Drop manhole: Inside or outside drop inlets shall be provided into sanitary sewer manholes for incoming lines having inverts 2 feet (0.6 m) or more above the inverts of the manhole outlet lines. Drop pipes shall be the same size as the sewer that they serve. Openings in walls of precast concrete manholes for outside drop connections shall not be made at joints. Outside drop piping materials and encasement/embedment shall be as indicated in the Plans. Concrete used to encase the outside drop piping shall be 4,000 psi plant mix concrete unless otherwise indicated on the Plans.

660.2.02 Delivery, Storage, and Handling

A. Handle pipe, fittings, valves, and accessories carefully to prevent damage. Handle pipe by rolling on skids, forklift, or front end loader. Do not use material damaged in handling. Slings, hooks, or pipe tongs shall be padded and used in such a manner as to prevent damage to the exterior coatings or internal lining of the pipe. Do not use chains in handling pipe, fittings, and appurtenances.

B. To unload pipe, carefully lift and lower it into position using approved padded slings, hooks, or clamps. Furnish equipment and facilities for unloading, handling, distributing, and storing pipe, fittings, valves, and accessories. Make equipment available at all times for use in unloading. Do not roll, drop or dump materials. Any materials dropped or dumped shall be subject to rejection without additional justification.

C. Stored materials including salvaged materials shall be kept in suitable areas safe from damage. The interior of all pipe, fittings, and other appurtenances shall be kept free from dirt or foreign matter at all times. Store and support plastic pipe to prevent sagging and bending. Store plastic pipe and gaskets to prevent exposure to direct sunlight. Valves shall be stored and protected from damage by freezing.

D. Pipe shall not be stacked higher than the limits recommended by the manufacturer. The bottom tier shall be kept off the ground on timbers, rails, or concrete.

660.3 Construction Requirements

660.3.01 Personnel

A. General Provisions 101 through 150.

B. Construction and installation of all wastewater utilities shall be performed by a Contractor prequalified/registered with GDOT.

C. All work specified in this section shall be performed by a Contractor with a valid Utility Contractor's license issued by the State of Georgia. Sewer service line installation shall be performed by either a Utility Contractor licensed in the State of Georgia or by a Master Plumber licensed in the State of Georgia.

660.3.02 Equipment

A. Ensure all equipment used is in conformance with the requirements and standards set forth in The Facility Owner's Standard Specifications.

660.3.03 Preparation

General Provisions 101 through 150.

660.3.04 Fabrication

General Provisions 101 through 150.

660.3.05 Construction

A. Finding Existing Underground Utilities and Obstructions

1. Comply with Subsection 107.13 and Subsection 107.21.
2. According to the best information available to GDOT, all known sewer lines, water lines, gas lines, telephone conduits, drainage structures, etc. are shown on the Plans. However, to find such installations, use an electronic pipe and cable finder for locating existing installations or obstructions to the work.
3. Obtain approval from GDOT Project Manager and the Utility Owner prior to disruption of wastewater services required for the installation of the facilities shown on the project Plans.

B. Jack and Bore

Comply with Section 615 for sewer main installations by jack and bore.

C. Directional Drilling

1. Install sewer mains and services by means of directional drilling at locations shown on the Plans or where approved by GDOT or Utility Owner. Provide submittals and follow all relevant procedures and requirements set forth in The Facility Owner's Standard Specifications.
2. The Contractor shall not initiate horizontal directional drilling until all submittals are received, reviewed, and accepted by GDOT and the Utility Owner, and all required permits are obtained.
3. The Contractor shall select drilling additives and fluid mixture proportions to ensure continuous circulation, bore stability, reduce drag on the pipe, and completely fill the annular space between the bore and the pipe to ensure stability and control settlement.
4. The Contractor shall submit contingency plans for remediation of potential problems that may be encountered during the drilling operations. The contingency plans shall address the observations that would lead to the discovery of the problem and the methods that would be used to mitigate the problem. Potential problems that shall be addressed include:
    a. Loss of returns/loss of circulation of drilling fluid.
    b. Encountering obstruction during pilot bore or reaming/pullback.
    c. Drill pipe or product pipe cannot be advanced.
    d. Deviations from design line and grade exceed allowable tolerances.
    e. Drill pipe or product pipe broken off in borehole.
    f. Product pipe collapse or excessive deformation occurs
    g. Utility strike.

h. Hydrolock occurs or is suspected.

i. Excessive ground settlement or heave of ground surface or existing utilities.

j. Inadvertent returns/hydrofracture or surface spills resulting in drilling fluids entering water or reaching the surface.

5. Pipe damaged in directional drilling operations shall be removed and replaced at no additional expense to GDOT or the Utility Owner.

6. Voids developed or encountered during the installation operation shall be pressure grouted with a grout mix approved by GDOT.

7. Installation shall include a locatable conduit system, with identification markers on each side of GDOT right-of-way where applicable. Two (2) insulated 8 gauge solid copper tracers wire shall be attached to the leading end of the pipe pulling head and shall extend the full length of the installed pipe.

8. The location and alignment of the pilot drill progress shall be continuously monitored for compliance with the proposed installation alignment and for verification of the depth of the bore. Monitoring shall be accomplished by computer generated bore logs which map the bore path based on x, y, z coordinate information provided by the locating/tracking system. Readings or plots shall be obtained on every drill rod, and shall be provided to the Inspector on a daily basis. Deviations between the recorded and design bore path shall be calculated and reported on the daily log. If the deviations exceed tolerances specified elsewhere, such occurrences shall be reported immediately to GDOT. The Contractor shall undertake all necessary measures to correct deviations and return to design line and grade.

9. Upon completion of the directional drill the Contractor shall furnish GDOT and the Utility Owner an as-built drawing along with a report of the monitoring of the drilling fluids during the pilot hole and back reamed hole.

10. Drilling fluid pressures, flow rates, viscosity, and density shall be monitored and recorded by the Contractor. The pressures shall be monitored at the pump. These measurements shall be included in daily logs submitted to GDOT. The Contractor shall document modifications to the drilling fluids, by noting the types and quantities of drilling fluid additives and the dates and times when introduced. The reason for the addition of drilling fluid additives or other modifications shall be documented and reported.

11. Management and disposal of drilling fluids shall be the Contractor's responsibility. Excess drilling fluids shall be contained at the entry and exit points until recycled or removed from the site. All drilling fluids shall be disposed of in a manner acceptable to the appropriate local, state and federal regulations. The Contractor's work will be immediately suspended by GDOT whenever drilling fluids seep to the surface other than in the boring entrance or exit pit, or when a paved surface is displaced.

12. Surfaces damaged by the work shall be restored to their preconstruction conditions at no additional cost to GDOT or Utility Owner, and with no increase in contract time.

13. The following items shall be as shown on the Plans, unless otherwise approved in writing by GDOT:

    a. Entry / exit points
    b. Drill entry / exit angles
    c. Pilot bore path
        1) Radius of Curvature
        2) Entry / exit tolerances: Contractor shall be solely responsible for all work necessary to correct excessive deviations from line and grade, including re-drilling, redesigning connections, and acquiring additional easement, at no additional cost to GDOT or Utility Owner and without schedule extension.

14. The pilot bore shall be pre-reamed and reamed using equipment and methods submitted by the Contractor. The Contractor shall completely ream the bore to the final diameter prior to pullback.

15. Pullback: The pipe shall be installed by pulling it into the reamed bore path in a continuous operation, behind a final reaming tool selected by the Contractor. The pipe shall be isolated from excessive torsional and axial stresses by a swivel device with a pre-established breakaway tensile capacity that is lower than the allowable tensile strength of the pipe. The maximum pull (axial tension force) exerted on the pipelines shall be measured continuously and limited

to the maximum allowed by the pipe manufacturer with an appropriate factor of safety so that the pipe or joints are not overstressed. The end of the pipe shall be closed during the pull back operation.

16. Pipelines shall be adequately supported during installation so as to prevent overstressing or buckling. The Contractor shall provide adequate support/rollers along the pipe layout area to support the required length of pipe for the bore. The pipe layout area shall be cleared of all large stones, construction debris, or other foreign objects that could damage the pipe during pullback. The Contractor shall monitor and inspect pipe rollers and method for suspending pipe at entry during the pullback operation to avoid damage to the pipe.
17. The end of the pipe shall be closed during the pull back operation.
18. Each length of pipe shall be inspected and cleaned as necessary to be free of debris immediately before joining.
19. The Contractor shall at all times handle the pipe in a manner that does not overstress or otherwise damage the pipe. Vertical and horizontal curves shall be limited so that wall stresses do not exceed 50% of yield stress for flexural bending of the pipe. If the pipe is buckled or otherwise damaged, the damaged section shall be removed and replaced by the Contractor at his expense. The Contractor shall take appropriate steps during pullback to ensure that the pipe and tracer wires will be installed without damage.
20. If necessary, the pipe shall have water added as it enters the bore to achieve neutral buoyancy and reduce pullback loads and to ensure that adequate internal pressure is maintained at all points to counter balance collapse pressures.
21. The Contractor shall cease pullback operations if the pipe is damaged and shall remove the pipe from the bore and repair the pipe using the manufacturer's recommended procedure or replace the damaged pipe before resuming installation.
22. Damage to the pipe resulting from manufacturer defects, installation, or grouting is the responsibility of the Contractor, including costs for replacement and labor and materials. To confirm no damage to the pipe, upon completion of pull back, the Contractor shall pull a sphere or pig through the entire length of the pipeline. The pig shall be one inch less in diameter than the internal diameter of the product pipe, capable of allowing water to pass through it, complete with a pulling cable on either side. If the pig or sphere cannot pass through the pipe, it shall be considered collapsed and damaged.
23. After the carrier pipe is completely pulled through the bore, a sufficient relaxation period as recommended by the pipe manufacturer shall be provided before the final pipe tie-in.
24. The Contractor shall conduct a final hydrostatic test of the installed pipeline. Final test shall be in accordance with these specifications. The Contractor shall repair any defects discovered during this test, and repeat until the pipe passes the test.

D. Excavating Trenches

1. The Contractor shall provide all necessary shoring and bracing materials as required to assure safe working conditions and to protect the excavations. The Contractor shall be required to fully comply with all applicable OSHA Excavation Safety Standards. No separate payment shall be made for any special procedure used in connection with the excavation.
2. Excavate trenches to the proper depth and width as follows:
   a. Trench to Grade: Excavated trench bottoms shall be firm, free from boulders, and conform to the established grade. Limit open trench excavation to a maximum of three 300 feet (90 m) ahead of completed backfill.
   b. Care shall be taken not to over excavate except where necessary to remove unstable material, irregularities, lumps, rock, and projections. Unnecessary over excavation shall be replaced at the Contractor's sole expense and in accordance with Subsection 660.3.05.
   c. Excavation carried below the established grade lines shown or established by the Utility Owner shall be backfilled according to Section 207 and Subsection 660.3.05. Use Class I or Class II Soils (defined in Section 810) and firmly compact the soil.
   d. Where the established grade of a trench is in rock, undercut the bottom of the trench by at least 6 inches (150

mm) beneath the pipe or conduit and the greater of 24 inches (600 mm) wider than the pipe/conduit (12 inches or 300 mm each side) or 42 inches (1050 mm) wide, then backfill and compact according to Subsection 660.3.05.

e. Open cut excavation in pavement and pavement patching shall be according to GA Standard No. 1401. Remove the pavement according to Section 444, except no separate payment shall be made for sawed joints.

f. Dewatering: Remove all water from excavations and maintain the excavations free of water while construction therein is in progress. Provide dewatering equipment as necessary to conform to this requirement. Dewatering procedures must meet all state and local regulatory requirements.

3. Minimum Trench Depth

a. Excavate trenches to provide at least 48 inches (1.2 m) cover depth directly above the pipe to the finished pavement surface, sidewalk, grass, etc. unless indicated otherwise on the Plans or by GDOT Project Manager and Utility Owner. In order to avoid existing utilities, it may be necessary for the pipe to be laid shallower or deeper than the minimum cover specified. At such time the Contractor shall not be allowed extra compensation for additional excavation necessary for deeper installations.

b. Side slopes of the trenches shall be as nearly vertical as practicable. Trenches in excess of 5 feet (1.5 m) deep shall either have the trench sides laid back to conform to OSHA requirements for trench safety, if such area is available within the limits of excavation, or, alternatively, trenches deeper than 5 feet (1.5 m) shall be excavated via trench box or shored and braced.

4. Trench Width: Excavate trenches to uniform widths, wide enough to allow proper installation of pipe, fittings, and other materials, a minimum of 6 inches (150 mm) and a maximum of 12 inches (300 mm) each side of the pipe or conduit.

5. Trench Bell Holes: Excavate bell holes deeply and widely enough to make joints and to allow the pipe barrel to rest firmly on the trench bottom.

6. Trench bottom: Excavate and shape trench bottoms to provide uniform bearing and support of pipes and conduits. Shape subgrade to provide continuous support of bells, joints, and barrels of pipes and for joints, fittings, and bodies of conduits/pipes. Remove projecting stones, tree roots, debris, and sharp objects along trench subgrade. Abrupt changes in grade of the trench bottom shall be avoided. Unless otherwise indicated in the Plans or The Facility Owner's Standard Specifications, trenches for force mains shall be graded to avoid high and low points that necessitate air release valves.

7. Excavations may be excavated and refilled either by hand or by machinery. Hand tool excavation shall be conducted where necessary to protect existing utilities and structures.

8. In the event that unsuitable material is encountered at or below the excavation depth specified or shown on the Plans, GDOT Project Manager shall be notified immediately before proceeding with any additional work. Such material shall be removed and replaced with suitable material in accordance with Section 205.

E. Connecting to Existing Mains

1. Connect to an existing main with the appropriate fittings according to the Plans or The Facility Owner's Standard Specifications and GDOT Project Manager. When making connections under pressure, furnish and use a tapping sleeve and valve assembly or line stop fittings as indicated. Coordinate with Utility Owner 72 hours in advance for wastewater service interruptions and temporary shut-offs. Evening or weekend work may be required to complete direct connections and tie-ins. Connect to existing mains as follows:

a. Before opening new pipeline trenches, locate the various points of connection to be made into existing pipelines. If necessary, uncover pipelines for the Utility Owner and GDOT Project Manager to prescribe the connections and fittings needed.

b. Connect to existing pipelines only to meet operating requirements. Cut existing lines only after obtaining the Utility Owner and GDOT Project Manager's permission.

c. Provide temporary line stops, associated fittings, and bypass pumping as indicated on the Plans and as necessary when cutting and plugging existing sewer mains to prevent service interruptions. Line stop and associated

fittings shall be suitable for working pressures of 250 psi.

d. Connections to existing asbestos cement pipe shall be performed as indicated on the Plans or in The Facility Owner's Standard Specifications. Cutting, removing, handling, and disposing of asbestos cement pipe shall be in accordance with requirements established by EPA, OSHA, GDOT, NIOSH, and the State of Georgia Environmental Protection Division, and any other applicable laws and ordinances.

F. Laying Sewer Mains and Appurtenances

1. Preparing and Handling Pipes
   a. Thoroughly clean the pipe and fittings before laying them. Keep them clean until accepted.
   b. Use suitable tools and equipment. Do not damage the pipe, especially the lining inside the pipe.
   c. Cut pipe in a manner to avoid damage to pipe or lining, leaving a smooth end at right angles to pipe axis. Smooth and bevel edges of cut pipe for push-on, gasket type joints.
   d. Bedding shall be provided as specified by the Utility Owner or pipe manufacturer for the type of conditions encountered. Bedding typically consists of granular soil free of lumps, clods, cobbles, and frozen materials, and shall be graded to a firm-but-yielding surface without abrupt changes in bearing value. Unstable soils and rock ledges shall be undercut from the bedding zone and replaced with suitable material.
   e. Bed pipe on coarse granular material in flat bottom trench with entire pipe barrel bearing uniformly on coarse granular material, except for an approximately 18-inch (450 mm) gap at pipe balance point for sling removal. Hand excavate and backfill as required to provide uniform and continuous bearing and support for the pipe. Do not support pipe on hubs or end bells. Consolidate coarse granular material under and around pipe up to pipe centerline by tamping.
   f. Join pipe with bells facing direction in which laying operation is progressing. Lay pipe upgrade wherever line grade exceeds 10%.
   g. Carefully examine pipe for cracks and other defects and do not lay defective pipe. If pipe or castings appear to be cracked, broken, or defective after laying, remove and replace those sections.
2. Alignment and Gradient
   a. Ensure that pipe alignment and gradient are according to the lines and grades on the Plans. Pressure pipe alignment shall be either straight or deflected to closely follow true curves. Deflect pipe lines only where required, within allowable horizontal and vertical deflection angles according to the manufacturer.
   b. Sewers shall be laid at least 10 feet (3 m) horizontally from any existing or proposed water main. The distance shall be measured edge-to-edge. When local conditions prevent a horizontal separation of 10 feet (3 m), the sewer may, on a case-by-case basis, be laid closer to a water main provided the water main is in a separate trench or on an undisturbed earth shelf located on one side of the sewer at such an elevation that the bottom of the water main is at least 18 inches (450 mm) above the top of the sewer.
   c. Maintain a vertical separation of at least 18 inches (450 mm) between the crown of sanitary sewers and the invert of existing or proposed water mains with the sewer main located below the water main.
   d. Where a vertical separation of 18 inches (450 mm) cannot be provided, and the sewer main cannot be relocated to provide adequate clearance, the section of sewer main passing over or under water mains shall be constructed of materials and with joints that are equivalent to water main standards of construction and in accordance with Section 670, or the sewer line shall be encased in a watertight carrier pipe in accordance with Section 670, extending 10 feet (3 m) on both sides of the crossing measured perpendicular to the water main and shall be pressure tested to assure water-tightness to 150 psi prior to backfilling.
3. Special Requirements for Laying Sewer Mains
   a. Excavate, clean, lay, joint, and backfill progressively and uniformly according to these requirements:
      1) Never leave pipe in the trench overnight without completely jointing and capping.
      2) Do not leave completed pipeline exposed in the trench. Backfill and compact the trench as soon as possible after laying, jointing, and testing are complete.
      3) At the close of work each day and when laying pipe, close the exposed end of the pipeline in the trench

with an approved wood or metal head or barrier.

4) If necessary to cover the end of an incomplete pipeline with backfill, close the end of the pipe with a satisfactory cap or plug.

G. Installing Sewer Mains by Open Cut

1. Use the following flexible joints for connections inside the roadway shoulders or curbs and gutters:
   a. Mechanical Joints
      1) When using mechanical joints, thoroughly wash bell sockets, spigots, gland, gasket, nuts, and bolts with soapy water before assembly. Keep these parts wet until the jointing operation is complete.
      2) Tighten nuts within the torque range recommended by the manufacturer. Check the tightening tolerance with a torque wrench.
      3) If effective sealing is not attained at the maximum recommended torque, disassemble, thoroughly clean, and then reassemble the joint.
      4) Do not overstress bolts to compensate for improper installation or defective parts.
   b. Push-On Type Joints
      1) Use push-on joints made according to the manufacturer's recommendations.
      2) Install PVC pipe in accordance with AWWA C605.
      3) Install ductile iron pipe in accordance with AWWA C600.
2. Restraints for pipe joints and fittings shall be provided as specified and as shown on the Plans. Restraints shall be installed per manufacturer's recommendations.
3. Buried ductile iron pipe and fittings shall be polyethylene encased as specified and as indicated on the Plans. Polyethylene encasement tubing shall be secured with polyethylene tape and installed in accordance with ANSI/AWWA C105/A21.5.
4. Unless otherwise specified by The Facility Owner's Standard Specifications, provide pipe detection wire on all non-metallic pipe systems. Tape the tracer wire to the top center of the pipe at intervals which prevent wire displacement during backfilling operations. Stub tracer wire up 6 inches (150 mm) above finished grade at all valves. For splices, use direct bury kits. After backfilling is complete, test electrical continuity of each tracer wire segment and provide test results to Utility Owner and GDOT Project Manager.
5. Install continuous underground warning tape during backfilling of trench for underground water distribution piping. Install 12 inches (300 mm) below finished grade, or 6 inches (150 mm) below subgrade under pavements and walkways, and buried directly over piping.
6. Use pipe cutters when cutting pipe or special castings. Do not use a hammer, chisel, or a cutting torch.
7. Force mains that do not meet minimum depth of cover, vertical clearance requirements, or other installation requirements at special locations (e.g. creek crossings) shall include concrete encasement. Concrete encasement shall be installed per The Facility Owner's Standard Specifications.
8. If HDPE pipe is to be installed where high groundwater table or water surrounding the pipe is expected, precautions shall be taken to provide neutral buoyancy to prevent floatation or a change in alignment.
9. Valves on Sewer Mains: Install and joint gate, plug, and check valves in accordance with AWWA C600. Include the valve box and valve marker where required.
10. Air release valves shall be installed at high elevation points on the force main and at locations indicated on the Plans. Air release valves shall be installed in accordance with manufacturer's recommendations.
    a. Unless specified otherwise in the Plans or The Facility Owner's Standard Specifications, air release valves shall be installed in a shallow manhole or vault. Automatic air relief valves shall not be used in areas where flooding of the manhole or vault may occur.
    b. An isolation valve shall be installed between the air release assembly and the connection to the main.
    c. The Contractor shall furnish and install at no additional cost to GDOT or Utility Owner all necessary fittings for the installation of air release valves at high points.

11. Thrust Collars and Thrust Blocks: If required, furnish materials and install thrust collars or concrete blocking along force mains as indicated in Subsection 660.2.01. Form and pour concrete thrust collars or blocks in accordance with the Plans and The Facility Owner's Standard Specifications. Blocking shall be poured against undisturbed earth and all forms shall be removed before backfilling.
12. Backfilling
    a. Furnish equipment, labor, and when necessary, suitable material to conform with The Facility Owner's Standard Specifications required for backfilling the pipe line trenches according to Section 207, and as follows:
        1) When testing for leaks in open trenches, do not backfill until testing is complete and leaks are eliminated.
        2) When retaining pavement adjacent to trenches, replace removed pavement with the same or better material when approved in accordance with the appropriate Section for the pavement type replaced.
        3) Place backfill on subgrades free of mud, frost, snow, or ice.
        4) Place and compact bedding course on trench bottoms and where indicated. Shape the bedding course to provide continuous support for bells, joints, and barrels of pipes and for joints, fittings, and bodies of conduits/pipes.
        5) Backfill shall include Class I or Class II Soils as defined in Section 810 or suitable material that conforms with The Facility Owner's Standard Specifications.
        6) Backfill shall be placed in two stages: first, side fill to a height of 12 inches (300 mm) above the top of pipe; second, overfill to former surface grade. Side fill shall consist of granular material laid in 6-inch (150 mm) layers each consolidated by mechanical tamping and controlled addition of moisture, to a density of 95% as determined by the Standard Proctor test (AASHTO T-99 Method D) or GDT 67. Overfill shall be layered and consolidated to match the entrenched material in cohesion and compaction. The top 12 inches (300 mm) shall be compacted to 100% of specified density. Consolidation by saturation or ponding shall not be permitted.
        7) Soil Moisture Control: Uniformly moisten and aerate subgrade and each subsequent fill or backfill soil layer before compaction to within 2% of optimum moisture content. Remove and replace, or scarify and air dry, otherwise satisfactory soil material that exceeds optimum moisture content by 2% and is too wet to compact to specified dry unit weight.
        8) Initial backfill shall be carefully compacted under pipe haunches and evenly up on both sides and along the full length of piping or conduit to avoid damage or displacement of piping or conduit. Place and compact fill and backfill of satisfactory soil to final subgrade elevation. Backfill voids with satisfactory soil while removing shoring and bracing and/or trench boxes.
        9) After backfilling, maintain temporary surface restoration per GA Standard No. 1401 until permanent repaving is complete. No separate payment shall be made for replaced pavement.

H. Installation of Manholes

1. Each manhole location within the trench shall be over excavated to receive a minimum of 8 inches (200 mm) of No. 57 stone to establish a firm foundation for the manhole. Where the excavation reveals an unsuitable foundation, whether rock or muck, the Contractor shall remove unsuitable material and install No. 57 stone in 6-inch (150 mm) lifts to a maximum of 2 feet (0.6 m) as a foundation for the structure.
2. All manholes shall be installed plumb.
3. Horizontal joint sealant protruding into the manhole shall be cut smooth against the interior wall. Interior joints shall not be grouted unless otherwise directed.
4. Exterior wrap shall be installed centered over joints between manhole sections. Exterior manhole wall shall be clean prior to installing wrap.
5. Backfill adjacent to manholes shall be mechanically compacted in 12-inch (300 mm) lifts symmetrically around the perimeter of the manhole up to the frame and cover, and in accordance with Subsection 660.3.05.
6. Manholes shall be set flush with finished pavement grades where located beneath roadways, sidewalks, or other paved surfaces.

7. All lifting holes or equipment mounting holes shall be filled in completely and made watertight per manufacturer's recommendations.

I. Connections to Existing Manholes

1. Whenever new sewers are connected to existing manholes, pipe openings shall be core drilled with approved equipment to accommodate new pipe. Such connections to existing manholes shall be installed in accordance with manufacturer's recommendations for neoprene boot, link seal or equal. All cuts shall be coated with an appropriate protective coating.
2. The bottom of the manhole shall be reworked and shaped to accommodate the new connections.

J. Laying Sewer Laterals and Appurtenances

1. Except as modified in this Section, construct and install sewer laterals according to the Plans and the requirements for laying sewer mains. Install service lines at locations shown on the Plans or where designated by the Utility Owner and GDOT Project Coordinators.
2. Trench depth and backfill cover may be adjusted at the discretion of the Utility Owner and GDOT Project Coordinators to provide at least 18 inches (450 mm) of cover.
3. Install wyes or tees in the locations shown on the Plans for connection of existing or future service lines. Install laterals with proper grade and alignment to the property line shown on the Plans.
4. New laterals shall extend from the sewer main to the edge of the right-of-way (no more than 5 feet (1.5 m) from the edge of the right-of-way line) where they shall be plugged using a stopper of appropriate size. Sewer laterals shall be tapped into sewer trunk lines using the appropriate tapping machine.
5. Laterals shall be bedded and backfilled in accordance with bedding requirements shown on the Plans and specified herein.
6. Lateral connections shall not be made by knocking a hole in the main or manhole, inserting the lateral pipe, and sealing with grout.
7. Unless otherwise indicated in the Plans or The Facility Owner's Standard Specifications , sewer laterals shall be a minimum of 6 inches (150 mm) in diameter and shall extend from the main and terminate with a clean-out constructed at the edge of right-of-way.

K. Cutting and Capping Existing Sewer Mains

Disconnect by sawing or cutting and removing a segment of existing pipe where cutting and capping or plugging is shown on the Plans or directed by The Facility Owner's or GDOT Project Coordinators. Provide a watertight pipe cap or plug and restraint mechanism to seal off existing mains indicated to remain in service. If sewer main is to be abandoned or removed and not specified to be grout filled, seal ends with a pipe cap or plug or with a masonry plug and minimum 6-inch (150 mm) cover of concrete on all sides around the end of the pipe.

1. The Contractor shall be responsible for uncovering and verifying the size and material of the existing main to be capped or plugged.
2. Abandoned manholes and sewer mains larger than 6 inches (150 mm) shall be removed or filled with flowable fill per Section 600 at the locations indicated on the Plans. Air release valves along abandoned pressure pipe shall be plugged prior to grouting. Prior to backfilling, the bottom of the manhole shall be broken up in such a manner that water will readily pass through and all pipes entering the manhole shall be plugged or grout filled. The top portion of the manhole structure shall be removed in order to establish a minimum of 3 feet cover from subgrade or finished grade when not under the pavement and filled with sand or suitable backfill.
3. Sewer mains shall be cleaned prior to placement of flowable fill. Use concrete or grout pumps capable of continuous delivery at planned placement rate with sufficient pressure to overcome friction and fill the sewer main.

L. Cured-In-Place Pipe (CIPP) Liner Installation

1. Work shall only be performed by personnel trained, experienced, and skilled in the CIPP process.
2. Bypass Pumping: Provide bypass pumping for the flow of sewage around the section or sections of pipe designated

for renovation. Accomplish bypass pumping by plugging the line at an existing upstream manhole and pumping the flow into a downstream manhole. Pump sizing shall be adequate to handle the flow. Provide bypass pumping during pre-installation and post-installation video inspections and during the CIPP liner installation.

3. Pre-Installation: Inspect pipelines for breaks, obstacles, and service connections by close circuit television (CCTV) and produce permanent video record (DVD). Camera used for inspection shall be equipped with rotating head that is capable of 90 degree rotation for horizontal and 360 degree rotation about its centerline and has a minimum resolution of 400 vertical lines and 460 horizontal lines. Camera shall be operative in 100% humidity. Utilize power winches, TV cable, and power rewinds to move camera through sewer line at a speed less than 30 feet (10 m) per minute. Provide voice over description on the video with stationing of services and areas for point repair indicated on the video. Inspect interior of pipeline to determine existing conditions that may prevent proper installation of the CIPP pipeliner. Designate areas for point repair by evaluating any obstructions that can't be removed by conventional sewer cleaning equipment such as a protruding service connection, dropped joint, or collapse. Confirm locations for all branch service connections. Transfer procession and property rights of the inspection video record to the Utility Owner.
4. Cleaning: Clear the line of all solids and roots. Remove all internal debris from the sewer line to prevent interference with the CIPP. Properly dispose of all debris removed from the sewer line.
5. Point Repair: Excavate and repair any protruding service connection, dropped joint, or collapsed pipe observed during the inspection process.
6. Customer sewer service shall be maintained throughout the duration of the project whenever possible. If maintaining customer sewer service is not possible, limit outage duration for sewer customers to a maximum of 8 hours. Each home or business being affected shall be contacted and informed of the work being conducted, when service will be unavailable, and the duration of the outage. Contact shall be made a minimum of 7 calendar days prior to service outage. Deliver a written notice to each affected home or business a minimum of one business day prior to beginning work informing them when service will be unavailable, the duration of the outage, and a local telephone number for customers to call and discuss any issues.
7. Install CIPP in accordance with ASTM F1216, Section 7, or ASTM F1743, Section 6 with the following modifications:
    a. Quantity of resin used for tube impregnation is sufficient to fill the volume of air voids in the tube with additional allowances for polymerization shrinkage and the loss of resin through cracks and irregularities in the original pipe wall.
    b. Thorough resin saturation is achieved throughout the length of the felt tube.
    c. Point of vacuum is not further than 25 feet from the point of initial resin introduction.
    d. Vacuum point is no further 75 feet form the leading edge of the resin after a vacuum in the tube is established.
    e. Leading edge of the resin slug is as near to perpendicular as possible.
8. Tube insertion: Position the wetout tube in the pipeline using either inversion or a pull-in method. If pulled into place, utilize power winching equipment suitable for intended purpose and ensure the tube is not damaged as a result of pull-in friction. The tube shall be pulled-in or inverted through an existing manhole or approved access point and shall extend fully to the next designated manhole or termination point.
9. Temperature Monitoring: Place temperature gauges inside the tube at the invert level of each end and monitor the temperature during the CIPP cure cycle.
10. Reopen service connections without excavation.
11. Following installation and reinstatement of service connections, perform post-installation inspection utilizing CCTV requirements for pre-installation.
12. Perform visual inspection of the CIPP pipeliner in accordance with ASTM F1743, Section 8.6.
13. Prepare CIPP pipeliner samples and test physical properties in accordance with ASTM F1216 or ASTM F1743,

Section 8, using either method proposed. Flexural properties shall meet or exceed the values listed in Table 1 of the applicable ASTM. Provide for testing of flexural properties and reporting of test data for each line segment by an independent testing laboratory accredited by AASHTO Accreditation Program.

14. Obtain wall thickness samples for analysis from each line segment installed and at the end farthest from the cure source. Determine wall thickness of samples as described in paragraph 8.1.6 of ASTM F1743. The minimum wall thickness at any point shall not be less than 87.5% of the design thickness as specified in Subsection 660.2.01. Provide for testing of wall thickness samples and reporting of test data for each line segment by an independent testing laboratory accredited by AASHTO Accreditation Program.

M. Relocating, Adjusting, and Removing

1. Sewer Valves and Air Release Valves
   a. Relocate, adjust to grade, or remove valves and valve boxes according to the Plans or as designated by the GDOT Project Manager and Utility Owner.
   b. Protect items during removal and relocation. Contractor shall replace lost or damaged Items at no expense to GDOT.
   c. Disconnect each joint before removing items from the trench.
   d. Test for leakage, adjust, and retest until no leaks appear.
   e. Backfill as specified in Subsection 660.3.05.
   f. Consider valve boxes part of the valve assembly and remove them intact with the valve.
2. Existing Valve Boxes
   a. Lower, raise, or relocate existing valve boxes to the location and grade established on the Plans or by the GDOT Project Manager and Utility Owner according to Section 611.
3. Lift Stations
   a. Demolish and install new lift station (if required) as indicated on the Plans.
4. Manholes
   a. Frames and covers shall be removed and manhole shall be adjusted to grade. Adjustment shall be made by adding or removing brickwork, concrete, riser rings, or other materials in accordance with the Plans and The Facility Owner's.
   b. Within roadways, manholes shall be brought to final grade prior to paving. A minimum area of 12 inches (300 mm) wide (from edge of manhole ring) and a minimum of 12 inches deep shall be excavated around the adjusted frame and cover prior to final paving. The excavated area shall be brought to the grade of the roadway base material with a minimum of 3,000 psi concrete in preparation of final paving.
5. Utility related items identified on the Plans to be salvaged are the property of the Utility Owner. Contractor shall coordinate with Utility Owner on delivery of salvaged materials. Should the Utility Owner choose to not accept these materials they shall be removed from the project site as soon as practical.

N. Aerial Crossings

1. When the aerial crossing is accomplished by attachment to a bridge or drainage structure, the crossing shall meet all requirements of the agencies that own or have jurisdiction over such structures.
2. Support must be provided for all joints in pipes utilized for aerial crossings. The supports must be installed to prevent frost heave, overturning, and settlement. Precautions against freezing, such as insulation and increased slope, must be provided.
3. Expansion joints shall be provided between above ground and below ground sewers. Where buried sewers change to aerial sewers, construction shall minimize frost heaving.
4. Aerial installations shall avoid or minimize stream blockage during normal high water events.
5. For pressure pipe, underground valves shall be provided at both ends of the aerial crossing so that the section can be isolated for testing or repair. The valves shall be restrained, easily accessible, and not subject to flooding. An air release/vacuum relief valve shall be installed at all high points along the aerial crossing.

6. Appropriate guards shall be installed at both ends of the aerial crossing to prevent public access to the pipe.

660.3.06 Quality Acceptance

A. Materials Certification

For certain products, assemblies and materials, in lieu of normal sampling and testing procedures by the Contractor, the GDOT, and Utility Owner may accept from the Contractor the manufacturer's certification with respect to the product involved under the conditions set forth in the following paragraphs:

1. Material certifications shall be provided to GDOT, who shall distribute to the Utility Owner. Material certifications shall be approved by GDOT and the Utility Owner prior to construction. The certification shall state/specify that the named product conforms to these specifications and requirements of the Utility Owner and GDOT, and representative samples thereof have been sampled and tested as specified.
2. The certification shall either:
   a. Be accompanied by a certified copy of the test results, or on GDOT QPL list, or
   b. Certify such test results are on file with the manufacturer and will be furnished to the GDOT Project Manager and Utility Owner upon demand.
3. The certification shall state/specify the name and address of the manufacturer and the testing agency and the date of tests; and sets forth the means of identification which shall permit field determination of the product delivered to the project as being the product covered by the certification.
4. Submit certification with two copies of the covered product to the GDOT Project Manager, and Utility Owner.
5. GDOT or the Utility Owner will not be responsible for any costs of certification or for any costs of the sampling and testing of products in connection therewith.
6. GDOT and the Utility Owner reserve the right to require samples and test products for compliance with pertinent requirements irrespective of prior certification of the products by the manufacturer. Any materials that fail to meet specification requirements will be rejected.
7. In accordance with the BUY AMERICA requirements of the Federal regulations (23 U.S.C. 313 and 23 CFR 635.410) all manufacturing processes for steel and iron products or predominantly of steel or iron (at least 90% steel or iron content) furnished for permanent incorporation into the work on this project shall occur in the United States. The only exception to this requirement is the production of pig iron and the processing, pelletizing and reduction of iron ore, which may occur in another country. Other than these exceptions, all melting, rolling, extruding, machining, bending, grinding, drilling, coating, etc. must occur in the United States.
   a. Products of steel include, but are not limited to, such products as structural steel piles, reinforcing steel, structural plate, steel culverts, guardrail steel supports for signs, signals and luminaires, and cable wire/strand. Products of iron include, but are not limited to, such products as cast iron frames and grates and ductile iron pipe. Coatings include, but are not limited to, the applications of epoxy, galvanizing and paint. The coating material is not limited to this clause, only the application process.
   b. Records to be provided by the Contractor for this certification shall include a signed mill test report and a signed certification by each supplier, distributor, fabricator, and manufacturer that has handled the steel or iron product affirming that every process, including the application of a coating, performed on the steel or iron product has been carried out in the United States of America, except as allowed by this Section. The lack of these certifications will be justification for rejection of the steel and/or iron product or nonpayment of the work.
   c. The requirements of said law and regulations do not prevent the use of miscellaneous steel or iron components, subcomponents and hardware necessary to encase, assemble and construct the above products, manufactured products that are not predominantly steel or iron or a minimal use of foreign steel and iron materials if the cost of such materials used does not exceed one-tenth of one percent (0.1%) of the total contract price or $2,500.00, whichever is greater.

B. Hydrostatic Testing of Pressure Pipe

1. When the Utility Owner and GDOT Project Manager approve a section of pressure pipe for testing, the Contractor shall furnish the materials, equipment, and labor to conduct the pressure and leakage tests. Use a test pump, pressure gauge, and a means of measuring the water necessary to maintain the required pressure during the prescribed testing time. All pressure and leakage testing shall be done in the presence of the Utility Owner and GDOT Project Manager as a condition precedent to the approval and acceptance of the system. All pipes shall have been thoroughly flushed prior to testing. Simultaneous or separate pressure and leakage tests may be performed.
2. All water for testing and flushing shall be water provided by the Contractor, at no cost to the Utility Owner or GDOT, from an approved source. Flow velocity during line filling shall not exceed 2 feet (0.6 m) per second (fps).
3. Testing Requirements
   a. Force main testing shall be done immediately after installation and backfilling has been completed.
   b. Force mains shall be tested in accordance with the latest revision of AWWA C600 for ductile iron and C605 for PVC under an average hydrostatic pressure of the greater of 1.5 times the maximum working pressure or 150 psi as measured at the lowest point in the system for a minimum of 2 hours. Pressure shall be maintained until all sections under testing have been checked for evidence of leakage.
   c. While the system is being filled with water, air shall be carefully and completely exhausted. If permanent air vents are not located at all high points, the Contractor shall install corporation stops or fittings and valves at such points at no additional expense to the Utility so the air can be expelled as the pipe system is slowly filled.
   d. Makeup water shall be added, as required, to maintain the pressure within 5 psi of the test pressure. The quantity used shall be measured by pumping from a calibrated container. The maximum amount of makeup water allowed shall be determined by the following formula:

$$L = \frac{SD\ P^{0.5}}{148{,}000}$$

in which,

L = Allowable Leakage in gallons per hour

S = Length of pipe being tested in feet

D = Nominal pipe diameter in inches

P = Average test pressure during the test in psi gauge

   e. Visible leaks shall be corrected regardless of total leakage shown by test. All pipe fittings and other materials found to be defective under test shall be removed and replaced. Lines which fail to meet test requirements shall be repaired and retested as necessary until test requirements are met. No additional compensation shall be made for repairs or retesting.

C. Alignment Testing

1. Straight alignment of gravity sewers shall be checked by either using a laser beam or lamping. Each segment between manholes shall show at least 90% of the full pipe circle visible when looking from manhole to manhole.

D. CCTV Inspection

1. All new gravity sewers shall be inspected via closed-circuit televising (CCTV) in accordance with The Facility Owner's Standard Specifications. The Contractor shall thoroughly clean the entire sewer system by jetting or applicable methods prior to the TV inspection. If conditions indicate repairs are necessary, re-televising may be required. The initial inspection shall be scheduled with the Utility Owner and GDOT Project Manager when the Contractor advises that all sewer lines are ready for testing.

2. All TV inspections shall be performed by persons and/or firms qualified in such work.
3. The Contractor shall provide the TV inspection deliverables according to the format indicated in The Facility Owner's Standard Specifications.

E. Manhole Vacuum Testing

1. A vacuum test shall be performed on each manhole to assure water-tightness in accordance with ASTM C1244. The manholes shall be tested separately from sewer lines.
2. If the manhole fails the initial test, necessary repairs shall be made at the Contractor's expense and the manhole retested until a satisfactory test is obtained.

F. Deflection Testing

Utility Owner may require deflection tests utilizing a mandrel to be performed on flexible gravity sewer pipes. Deflection tests shall be conducted after the final backfill has been in place to permit stabilization of the soil-pipe system and follow the requirements of The Facility Owner's Standard Specifications. No mechanical pulling devices shall be used. All pipes not passing this mandrel shall be re-laid or replaced by the Contractor at no additional cost to GDOT or Utility Owner.

G. Leakage Testing

1. The Contractor shall conduct tests to determine the water-tightness of gravity sewers when completed. The Utility Owner shall observe the tests with the Contractor furnishing all required labor, equipment, and materials.
2. Sewers shall be tested in sections with each section extending between two adjacent manholes or from the end of the sewer to the nearest manhole. The Contractor shall utilize an infiltration test, an exfiltration test, or a low pressure air test at the direction of the Utility Owner and in accordance with The Facility Owner's Standard Specifications.
    a. Infiltration: Each section shall be covered with no less than two feet (0.6 m) of water above the top of the pipe at the highest point. The infiltration will be measured by means of a weir located in the downstream manhole. The pressure head of 2 feet (0.6 m) shall be maintained for a period of not less than 24 hours before the weir measurements are made.
    b. Exfiltration: The sewer at the upstream side of the lower manhole and the upstream side of upper manhole in each section shall be closed with a watertight bulkhead and the sewer filled with water until the water elevation in the upstream manhole is not less than two feet (0.6 m) above the top of the sewer pipe or two feet (0.6 m) above ground water elevation in the trench, whichever is higher. The exfiltration will be determined by measuring the amount of water required to maintain the above stated water elevation for a period of one hour from the start of the test. The entire length of section to be tested shall be filled and maintained full of water for a period of approximately 24 hours prior to the start of the test.
    c. The amount of exfiltration or infiltration shall not exceed 50 gallons per inch of pipe diameter per 24 hours per mile of sewer in each and every section tested in accordance with the above.
    d. In the event the allowable leakage rates are not met, the Contractor shall determine the location(s) where excess water is entering or leaving the sewer. The sewer and/or the manholes shall be repaired and retested until the leakage in the sewer is within the allowable limits.
3. Air test: Low pressure air testing shall be completed to detect leaks in sewers where hydrostatic testing is not practical. The Contractor shall perform the low pressure air test as specified in ASTM C924 for concrete and Uni-Bell UNI-B-6-98 for plastic pipe.

660.3.07 Contractor Warranty and Maintenance

General Provisions 101 through 150.

660.4 Measurement

Incidentals including excavation, rock removal, backfilling, flushing, testing, temporary water connections, pavement removal, pavement replacement, and other incidentals required for the installation of water distribution items are not measured for separate payment and shall be included in the applicable Pay Items below. Gravity sewer mains, manholes, force mains, and laterals, and associated items of work in this Specification, complete, in place, and accepted, are measured for payment as follows:

A. Ductile Iron Sewer Main

Ductile iron sewer mains shall be measured in linear feet (meters) for each size and thickness class installed. Measurement shall be horizontally above the centerline of the pipe and shall include the length of valves and fittings.

B. PVC Sewer Force Main

PVC sewer mains shall be measured in linear feet (meters) for each size and thickness installed. Measurement shall be horizontally above the centerline of the pipe and shall include the length of valves and fittings.

C. PVC Sewer Gravity Main

PVC sewer mains shall be measured in linear feet (meters) for each size and thickness installed. Measurement shall be horizontally above the centerline of the pipe and shall include the length of valves and fittings.

D. Fusible PVC Sewer Main

Fusible PVC sewer mains shall be measured in linear feet (meters) for each size and type installed. Measurement shall be horizontally above the centerline of the pipe and shall include the length of valves and fittings.

E. HDPE Sewer Main

HDPE sewer mains shall be measured in linear feet (meters) for each size and type installed. Measurement shall be horizontally above the centerline of the pipe and shall include the length of valves and fittings.

F. Concrete Sewer Main

Concrete sewer mains shall be measured in linear feet (meters) for each size and type installed. Measurement shall be horizontally above the centerline of the pipe and shall include the length of valves and fittings.

G. Ductile Iron Fittings

Ductile iron fittings shall be included in the overall pipe measurements acceptably installed. This Item includes, but is not limited to, wyes, tees, bends, crosses, sleeves, plugs and caps, and reducers.

H. Restrained Joints

Joint restraints used with the installation of PVC or ductile iron pipe shall be included in the overall pipe measurements acceptably installed on the number of each size restraint device installed.

I. Manholes

Manholes shall be measured on an individual basis on the depth and type of manhole acceptably installed in accordance to Section 668.

I. Drop Manholes

Drop Manholes shall be measured on an individual basis on the depth and type of manhole acceptably installed in accordance to Section 668.

J. Connection to Existing Manholes

Connections to existing manholes shall be included in the Contract price for sewer line connection acceptably installed.

K. Gate Valves

Gate valves shall be measured on an individual basis for each size valve and box assembly acceptably installed.

L. Check Valves

Check valves shall be measured on an individual basis on the number of each size valve and box assembly acceptably installed.

M. Plug Valves

Plug valves shall be measured on an individual basis on the number of each size valve and box assembly acceptably installed.

N. Tapping Sleeve and Valve Assembly

Tapping sleeve and valve assemblies shall be measured on an individual basis on the number of each size tapping sleeve and valve assembly acceptably installed.

O. Sewer Laterals

Sewer laterals shall be measured on an individual basis on the size of lateral acceptably installed.

P. Cleanouts

Sewer laterals shall be measured on an individual basis on the number of each cleanout acceptably installed.

Q. Air Release Valve Assemblies

Air release valve assemblies shall be measured on an individual basis on the number of each size and type of air release valve assembly acceptably installed.

R. Steel Casing

Steel casing pipe of the wall thickness and diameter specified shall be measured by the linear foot for each size and thickness of steel casing pipe installed. Measurement shall be horizontally above the centerline of the casing.

S. Relocation of Existing Air Release Valves

Relocation of existing air release valves shall be measured on an individual basis on the number of each acceptably relocated.

T. Adjustment of Existing Valve Boxes to Grade

Adjustment of existing valve boxes adjusted to grade in their original locations shall be measured on an individual basis on the number of each valve box acceptably adjusted in accordance with section 611.

U. Removal of Air Release Valves

Removal of existing air release valves shall be measured on an individual basis on the number of each removed.

V. Removal of Manholes

Removal of existing manholes shall be measured on an individual basis on the number of each manhole removed in accordance to Section 610.

W. Adjustment of Manholes

Adjustment of existing manholes adjusted to grade in their original locations shall be measured on an individual basis on the number of each manhole acceptably adjusted in accordance to Section 611.

X. Reconstruct Manhole

Reconstruction of existing manholes to grade in their original locations shall be measured on an individual basis on the number of each acceptably reconstructed manhole in accordance to Section 611.

Y. Adjustment of Cleanout

Adjustment of cleanouts to grade shall be measured on an individual basis on the number of each cleanout acceptably adjusted in accordance to Section 611.

Z. Concrete Thrust Blocks

Concrete thrust blocking installed shall be measured as indicated in Section 500 per cubic yard of concrete acceptably installed. When Concrete Thrust Blocks is not shown as a pay item, include the cost of the work in the bid price for the sewer pipe.

AA. Concrete Thrust Collars

Thrust collars shall be measured on an individual basis on the number of each size thrust collar acceptably installed. When Concrete Thrust Collars is not shown as a pay item, include the cost of the work in the bid price for the sewer pipe.

BB. Cut and Plug Sewer Main

Cutting and plugging of sewer mains shall be measured on an individual basis per each instance of cutting and plugging existing mains as shown on the Plans.

CC. Removal of Sewer Mains

Removal of sewer mains shall be measured per linear foot for each size pipe actually removed in accordance to Section 610. Measurement shall be horizontally above the centerline of the pipe removed and shall include the length of valves and fittings.

DD. Line Stop

Line stops shall be measured on an individual basis on the number of each size line stop actually installed.

EE. Flowable Fill

Flowable fill shall be measured as indicted in Section 600 per cubic yard of flowable fill acceptably installed. When flowable fill is not shown as a pay item, include the cost of the work in the bid price for the appropriate item.

FF. Cured-In-Place-Pipe (CIPP) Liners

CIPP liners shall be measured per linear foot for each size CIPP installed. Measurement shall be horizontally above the centerline of the host pipe from center of manhole to center of manhole.

GG. Insertion Valve

Insertion valves shall be measured on an individual basis on the number of each size valve acceptably installed.

HH. Closed Circuit Television (CCTV) Inspection

CCTV inspection shall be measured per linear foot of CCTV inspection price to be included in the Contract price for sewer pipe acceptably performed.

II. Three-Dimensional (3D) Survey

Three-dimensional survey shall be measured as one lump sum for a complete and accepted survey price to be included in the Contract price for sewer pipe acceptably performed.

660.4.01 Limits

General Provisions 101 through 150.

660.5 Payment

The Contract Unit Price for each Item, complete and accepted, shall include all costs incidental to the construction of the item according to the Plans and as specified in this Section. The unit prices bid shall include due allowance for the salvage value of all materials removed from existing or temporary lines and not installed in the completed work. All such surplus items shall become the property of the Contractor unless such surplus items are specified to be salvaged.
Payment for any item listed below is full compensation for the Item or Items complete in place.

A. Ductile Iron Sewer Mains

Ductile iron sewer mains shall be paid for at the unit price per linear foot for each diameter pipe installed and shall cover

the cost for all materials, transportation, labor, equipment, excavation, sheeting and shoring, installation of pipe, joints and jointing materials, anchoring, warning tape, polyethylene encasement, protection of existing utilities, connections to existing mains, flushing, backfilling, backfill materials, disposal of unsuitable backfill material, clean backfill, tamping, testing, densities, utility crossings, dewatering, trench stabilization, clean-up, restoration, and all work and materials necessary to place the pipe into service.

B. PVC Force Main

PVC sewer mains shall be paid for at the unit price per linear foot for each diameter and thickness pipe installed and shall cover the cost for all materials, transportation, labor, equipment, excavation, sheeting and shoring, installation of pipe, joints and jointing materials, anchoring, tracer wire, warning tape, protection of existing utilities, connections to existing mains, flushing, backfilling, backfill materials, disposal of unsuitable backfill material, clean backfill, tamping, testing, densities, utility crossings, dewatering, trench stabilization, clean-up, restoration, and all work and materials necessary to place the pipe into service.

C. PVC Gravity Main

PVC sewer mains shall be paid for at the unit price per linear foot for each diameter and thickness pipe installed and shall cover the cost for all materials, transportation, labor, equipment, excavation, sheeting and shoring, installation of pipe, joints and jointing materials, tracer wire, warning tape, protection of existing utilities, connections to existing mains, flushing, backfilling, backfill materials, disposal of unsuitable backfill material, clean backfill, tamping, testing, densities, utility crossings, dewatering, trench stabilization, clean-up, restoration, and all work and materials necessary to place the pipe into service.

D. Fusible PVC Sewer Main

Fusible PVC sewer mains shall be paid for at the unit price per linear foot for each diameter pipe installed and shall cover the cost for all materials, transportation, labor, equipment, excavation, sheeting and shoring, entry/exit pits, installation of pipe, joints and jointing materials, tracer wire, warning tape, mechanical joint adapters, protection of existing utilities, connections to existing sewer mains, fusion process materials and equipment, directional drilling materials and equipment, tracking system, assembling, welding, supporting, stringing, pulling, pigging, cleaning, flushing, backfilling, backfill materials, disposal of unsuitable backfill material, clean backfill, tamping, testing, densities, utility crossings, dewatering, trench stabilization, clean-up, and restoration, and all incidentals necessary to place the pipe into service except where such items are shown to be paid for under a separate Pay Item.

E. HDPE Sewer Main

HDPE sewer mains shall be paid for at the unit price per linear foot for each diameter pipe installed and shall cover the cost for all materials, transportation, labor, equipment, excavation, sheeting and shoring, entry/exit pits, installation of pipe, tracer wire, warning tape, mechanical joint adapters, protection of existing utilities, connections to existing mains, fusion process materials and equipment, directional drilling materials and equipment, tracking system, assembling, welding, supporting, stringing, pulling, pigging, cleaning, flushing, backfilling, disposal of unsuitable backfill material, clean backfill, tamping, testing, densities, utility crossings, dewatering, trench stabilization, clean-up, and restoration, and all incidentals necessary to place the pipe into service except where such items are shown to be paid for under a separate Pay Item.

F. Concrete Sewer Main

Concrete sewer mains shall be paid for at the unit price per linear foot for each diameter pipe installed and shall cover the cost for all materials, transportation, labor, equipment, excavation, sheeting and shoring, installation of pipe, anchoring, tracer wire, warning tape, protection of existing utilities, connections to existing mains, flushing, backfilling, backfill materials, disposal of unsuitable backfill material, clean backfill, tamping, testing, densities, utility crossings, dewatering, trench stabilization, clean-up, restoration, and all work and materials necessary to place the pipe into service.

G. Ductile Iron Fittings

Ductile iron fittings will not be paid for separately but shall be included in the overall pipe measurements acceptably installed each fitting as denoted in the manufacturers' catalogues and shall cover the cost for all materials, transportation, labor, equipment, excavation, sheeting and shoring, installation of fittings, joints and jointing materials, anchoring,

warning tape, polyethylene encasement, protection of existing utilities, flushing, backfilling, backfill materials, disposal of unsuitable backfill material, clean fill, tamping, testing, densities, utility crossings, dewatering, trench stabilization, clean-up, restoration, all other related and necessary materials, work, and equipment required to install a complete and operable pipeline fitting. This Item includes, but is not limited to, wyes, tees, bends, crosses, sleeves, plugs and caps, couplings, and reducers.

H. Restrained Joints

Restrained joints not be paid for separately but shall be included in the overall pipe measurements acceptably installed each fitting as denoted and shall cover the cost for all materials, transportation, labor, equipment, excavation, sheeting, shoring, installation of the restraint device, polyethylene encasement, protection of existing utilities, backfilling, backfill material, disposal of unsuitable backfill materials, clean fill, tamping, testing, densities, utility crossings, dewatering, trench stabilization, clean-up, restoration, and all work and materials necessary to install the restrained joint.

I. Gate Valves

Gate valves shall be paid for at the unit price per each size gate valve and box assembly installed and shall cover the cost for all materials, transportation, labor, equipment, excavation, sheeting and shoring, installation of the gate valves including valve box, concrete pad or collar, valve identification disc, valve marker, valve tag, polyethylene encasement, protection of existing utilities, backfilling, backfill material, disposal of unsuitable backfill materials, clean fill, tamping, testing, densities, utility crossings, dewatering, trench stabilization, clean-up, restoration, and all work and materials necessary to install the gate valve and place it in service.

J. Plug Valves

Plug valves shall be paid for at the unit price per each size plug valve and box assembly installed and shall cover the cost for all materials, transportation, labor, equipment, excavation, sheeting and shoring, installation of the butterfly valves (including valve box), concrete pad or collar, valve identification disc, valve marker, valve tag, polyethylene encasement, protection of existing utilities, backfilling, backfill material, disposal of unsuitable backfill materials, clean fill, tamping, testing, densities, utility crossings, dewatering, trench stabilization, clean-up, restoration, and all work and materials necessary to install the plug valve and place it in service.

K. Check Valves

Check valves shall be paid for at the unit price per each size check valve and box assembly installed and shall cover the cost for all materials, transportation, labor, equipment, excavation, sheeting and shoring, installation of the check valves, concrete vault or manhole, concrete pad or collar, valve identification disc, valve marker, valve tag, polyethylene encasement, protection of existing utilities, backfill material, disposal of unsuitable backfill materials, clean fill, tamping, testing, densities, utility crossings, dewatering, trench stabilization, clean-up, restoration and all work and materials necessary to install the check valve and place it in service.

L. Tapping Sleeve and Valve Assembly

Tapping sleeve and valve assemblies shall be paid for at the unit price per each size tapping sleeve and valve assembly installed and shall cover the cost for all materials, transportation, labor, equipment, excavation, sheeting and shoring, installation of tapping sleeves and valve assemblies including valve box, concrete pad or collar, valve marker, polyethylene encasement, protection of existing utilities, tapping the force main, backfilling, backfill material, disposal of unsuitable backfill materials, clean fill, tamping, testing, densities utility crossings, dewatering, trench stabilization, clean-up, restoration, and all work and necessary hardware to install the tapping sleeve and valve assembly and place it in service.

M. Manholes

Sanitary sewer manholes shall be paid for at the unit price in accordance to Section 668 ,according to the depth and type of each manhole installed and shall cover the cost for all materials, transportation, labor, equipment, excavation, sheeting and shoring, installation of manholes including ring and covers, inverts, coatings, protection of existing utilities, backfill material, disposal of unsuitable backfill materials, clean fill, tamping, testing, densities, utility crossings, dewatering, trench stabilization, clean-up, restoration, and all work and materials necessary to install the manhole and place into service.

N. Drop Manholes

Sanitary sewer drop manholes shall be paid for at the unit price per each manhole installed in accordance to Section 668 and shall cover the cost for all materials, transportation, labor, equipment, excavation, sheeting and shoring, installation of manholes including ring and covers, inverts, coatings, outside drop piping and fittings, concrete encasement, protection of existing utilities, backfill material, disposal of unsuitable backfill materials, clean fill, tamping, testing, densities, utility crossings, dewatering, trench stabilization, clean-up, restoration, and all work and materials necessary to install the manhole and place into service.

O. Connections to Existing Manholes

Connections to existing manholes shall be paid for in the Contract Price for sewer pipe and shall cover the cost for all material, transportation, labor, equipment, excavation, sheeting and shoring, installation of manhole connection, rework of inverts, grout, coatings, protection of existing utilities, backfill material, disposal of unsuitable backfill materials, clean fill, tamping, testing, densities, utility crossings, dewatering, trench stabilization, clean-up, bypass pumping (as required), restoration, and all work and materials necessary to acceptably install the manhole connection.

P. Sewer Laterals

Sewer laterals shall be paid for at the unit price per size of each size installed to the property line and shall cover the cost for all materials, transportation, labor, equipment, excavation, sheeting and shoring, piping, installation of sewer lateral including connection to existing pipe, cleanout, cleanout marker, fittings including wyes, bends, pipe, cap with screw plug, tracer wire, casting, concrete collar or pad, valve box and cover, bypass pumping (as required), protection of existing utilities, backfilling, backfill materials, disposal of unsuitable backfill material, clean fill, tamping, testing, densities, utility crossings, dewatering, trench stabilization, clean-up, restoration, and all work and materials necessary to place the sewer lateral into service.

Q. Cleanouts

Sewer cleanouts shall be paid for at the unit price per each cleanout installed and shall cover the cost for all materials, transportation, labor, equipment, excavation, sheeting and shoring, piping, installation of cleanout including connection to existing pipe, fittings including wyes, bends, pipe, cap with screw plug, tracer wire, casting, concrete collar or pad, valve box and cover, bypass pumping (as required), protection of existing utilities, backfilling, backfill materials, disposal of unsuitable backfill material, clean fill, tamping, testing, densities, utility crossings, dewatering, trench stabilization, clean-up, restoration, and all work and materials necessary to place the cleanout into service.

R. Air Release Valve Assembly

Air release valves shall be paid for at the unit price per each size and type of air release valve installed and shall cover the cost for all materials, transportation, labor, equipment, excavation, sheeting and shoring, installation of the air release assembly, tapping saddle, isolation valve, reducers, piping, restraints, fittings, tracer wire, concrete manhole or vault, protection of existing utilities, backfilling, backfill materials, disposal of unsuitable backfill material, clean fill, tamping, testing, densities, utility crossings, dewatering, trench stabilization, clean-up, restoration, and all work and materials necessary to place the air release assembly into service.

S. Steel Casing

Steel casing pipe shall be paid for at the unit price per linear foot according to the diameter and thickness of the steel casing installed and shall cover the cost for all materials, transportation, labor, equipment, excavation, sheeting and shoring, protection of existing utilities, steel casing pipe, skid, steel straps, coatings, casing spacers, end seals, boring and jacking pits, backfilling, backfill materials, disposal of unsuitable backfill material, clean fill, tamping, testing, densities, dewatering, trench stabilization, clean-up, restoration, and all work and materials necessary to install the steel casing except where such items are shown to be paid for under a separate Item. The carrier pipe shall be paid for as a separate Pay Item.

T. Relocation of Existing Air Release Valves

Relocation of air release valves shall be paid for at the unit price per each air release valve assembly relocated and shall cover the cost for all materials, transportation, labor, equipment, excavation, sheet and shoring, removal of existing air

release valve assembly, installation at location indicated in Plans, piping, restraints, tracer wire, fittings, adjustment to final grade, polyethylene encasement, protection of existing utilities, backfilling, backfill material, disposal of unsuitable backfill materials, clean fill, tamping, testing, densities, dewatering, trench stabilization, clean-up, restoration, and all work necessary to locate, remove, and relocate the air release valve except where such items are shown to be paid for under a separate Pay Item.

U. Adjustment of Existing Valve Boxes to Grade

Adjustment of existing valve boxes shall be paid for which shall be paid for in accordance with Section 611, at the unit price per each valve box adjusted to final grade and shall cover the cost of all materials, transportation, labor, equipment, excavation, sheeting and shoring, valve case and lid, trench adapter and operating nut extensions/reductions, tracer wire and splices, tracer wire riser and threaded plug, concrete pad, valve identification disc, backfilling, backfill material, disposal of unsuitable backfill materials, clean fill, tamping, testing, densities, dewatering, trench stabilization, clean-up, restoration, and all work and materials necessary to adjust the valve box.

V. Adjustment of Existing Manhole

Manhole tops to be raised or lowered 2 feet (0.6 m) or less are considered adjustment of existing manholes, which shall be paid for in accordance with Section 611, at the unit price per each manhole adjusted to final grade and shall cover the cost of all materials, including new ring and covers for sanitary manholes, transportation, labor, equipment, plugs, riser sections, brick and mortar, adjustment rings, excavation, sheeting and shoring, backfilling, backfill material, disposal of unsuitable backfill materials, clean fill, tamping, testing, densities, dewatering, trench stabilization, clean-up, bypass pumping (as required), restoration, and all work and materials necessary to install the new ring and cover and adjust to final grade.

W. Reconstruct Existing Manhole

Manhole tops to be raised between 2 feet (0.6 m) and 6 feet (1.5 m), or tops to be lowered more than 2 feet (0.6 m) are considered the reconstruction of an existing manhole, which shall be paid for which shall be paid for in accordance with Section 611, at the unit price per each manhole adjusted to final grade and shall cover the cost of all materials, including new ring and covers for sanitary manholes, transportation, labor, equipment, plugs, riser sections, brick and mortar, excavation, sheeting and shoring, backfilling, backfill material, disposal of unsuitable backfill materials, clean fill, tamping, testing, densities, dewatering, trench stabilization, clean-up, bypass pumping (as required), restoration, and all work and materials necessary to reconstruct the manhole. Tapping a new pipeline into an existing manhole is not considered reconstruction.

X. Adjustment of Cleanout

Adjustment of cleanouts shall be paid for at the unit price per each cleanout adjusted to finished grade and shall cover the cost of all materials, including transportation, labor, equipment, excavation, sheeting and shoring, backfilling, backfill material, disposal of unsuitable backfill materials, clean fill, tamping, testing, densities, dewatering, trench stabilization, clean-up, bypass pumping (as required), restoration, and all work and materials necessary to adjust the cleanout to final grade.

Y. Removal of Manhole

Removal of manholes shall be paid for which shall be paid for in accordance with Section 610, at the unit price per each manhole removed and shall cover the cost for all materials, transportation, labor, equipment, excavation, sheet and shoring, protection of existing utilities, backfilling, backfill material, disposal of unsuitable backfill materials, clean fill, tamping, testing, densities, dewatering, trench stabilization, clean-up, bypass pumping (as required), restoration, and all work necessary to remove and dispose of manholes including ring and covers.

Z. Removal of Air Release Valve

Removal of air release valves shall be paid for which shall be paid for in accordance with Section 610, at the unit price per each air release valve removed and shall cover the cost for all materials, transportation, labor, equipment, excavation, sheeting and shoring, removal of air release valve assemblies, piping, manholes, concrete vaults and fabricated enclosures, backfilling, backfill materials, disposal of unsuitable backfill materials, clean fill, tamping, testing, densities, dewatering, trench stabilization, clean-up, restoration, storage and delivery of air release valves identified to be salvaged,

and all work necessary to remove the air release valve.

AA. Concrete Thrust Blocks

Concrete thrust blocks shall be paid for at the unit price per cubic yard of concrete complete in place as indicated in Section 500 and shall cover the cost of all materials, transportation, labor, equipment, excavation, sheeting and shoring, concrete, forming, reinforcement, protection of existing utilities, backfilling, backfill material, disposal of unsuitable backfill materials, clean fill, tamping, testing, densities, dewatering, trench stabilization, clean-up, restoration, and all work and materials necessary to install a complete thrust block. Concrete Thrust Blocks is not shown as a pay item; include the cost of the work in the bid price for the sewer pipe.

BB. Concrete Thrust Collars

Concrete thrust collars shall be paid for at the unit price per each size of thrust collar and shall cover the cost of all materials, transportation, labor, equipment, excavation, sheeting and shoring, reinforced concrete thrust collars, retainer glands, reinforcement, protection of existing utilities, backfilling, backfill material, disposal of unsuitable backfill materials, clean fill, tamping, testing, densities, dewatering, trench stabilization, clean-up, restoration, and all work and materials necessary to install a complete thrust collar. Concrete Thrust Collars is not shown as a pay item; include the cost of the work in the bid price for the sewer pipe.

CC. Removal of Sewer Mains

Removal of sewer mains shall be paid for which shall be paid for in accordance with Section 610, at the unit price per linear feet (meters) of the size of sewer main to be removed and shall cover the cost for all materials, transportation, labor, equipment, excavation, sheeting and shoring, protection of existing utilities, backfilling, backfill material, disposal of unsuitable backfill materials, clean fill, tamping, testing, densities, dewatering, trench stabilization, clean-up, bypass pumping (as required), restoration, and all work and materials necessary to locate, remove and dispose of the pipe and associated appurtenances. Unless indicated for removal as a separate Pay Item, appurtenances to be removed shall include but not be limited to fittings, isolation valves, air release valves, valve boxes, steel casings, casing spacers, service laterals, thrust blocks, and concrete. All such surplus items shall become the property of the Contractor unless specified to be salvaged by the Utility Owner.

DD. Cut and Plug Existing Sewer Main

Cutting and plugging of existing sewer mains shall be paid for at the unit price per each installation and shall cover all materials, transportation, labor, equipment, excavation, sheeting and shoring, protection of existing utilities, backfilling, backfill material, disposal of unsuitable backfill materials, clean fill, tamping, testing, densities, dewatering, trench stabilization, clean-up, restoration, and all work and materials necessary to cut and plug existing sewer mains except where such items are shown to be paid for under a separate Pay Item.

EE. Line Stops

Line stops shall be paid for at the unit price per each size line stop installed and shall cover the cost for all materials, transportation, labor, equipment, excavation, sheeting and shoring, installation of the line stop assemblies, valves, valve boxes, fittings, restraints, protection of existing utilities, backfilling, backfill material, disposal of unsuitable backfill materials, tamping, testing, densities, utility crossings, dewatering, trench stabilization, clean-up, restoration, and all work and materials necessary to install the gate valve and place it in service.

FF. Flowable Fill

Flowable fill shall be paid for at the unit price per cubic yard of flowable fill installed as indicated in Section 600 and shall cover the cost for all materials, transportation, labor, equipment, excavation, sheeting and shoring, flushing, plugging air release valves and service connections, installation of flowable fill, protection of existing utilities, backfilling, backfill material, disposal of unsuitable backfill materials, clean fill, tamping, testing, densities, dewatering, trench stabilization, clean-up, restoration, and all work and materials necessary to complete the installation. When flowable fill is not shown as a pay item for the sewer items, include the cost of the work in the bid price for the appropriate item.

GG. Cured-In-Place-Pipe (CIPP) Liner

CIPP liners shall be paid for at the unit price per linear foot and diameter of liner acceptably installed and shall cover the cost for all materials, transportation, labor, equipment, bypass pumping, cleaning, root removal, flushing, coordination with and protection of existing utilities, distributing project notices, removal of protruding service connections, supplying and installing liner, reinstatement of service connections, inspection, testing, clean-up, restoration, and all work and materials necessary to complete the liner installation including incidentals and associated labor for which payment is not provided under a separate Pay Item. Point repairs shall be paid for under the unit price per linear foot of the diameter and material of pipe being replaced.

HH. Insertion Valve

Insertion valves shall be paid for at the unit price per each size valve inserted and shall cover the cost for all materials, transportation, labor, equipment, excavation, sheeting and shoring, installation of the valve, valve boxes, fittings, restraints, concrete pad or collar, valve identification disc, valve marker, polyethylene encasement, protection of existing utilities, backfilling, backfill material, disposal of unsuitable backfill materials, clean fill, tamping, testing, densities, dewatering, trench stabilization, clean-up, restoration, and all work and materials necessary to install the insertion valve and place it in service.

II. Closed Circuit Television (CCTV) Inspection

CCTV inspection shall be included in the Contract price for sewer pipe inspection acceptably performed and shall cover the costs for all materials, transportation, labor, equipment, excavation, sheeting, shoring, bypass pumping, protection of existing utilities, CCTV inspection, CDs / DVDs, inspection reports, clean-up, restoration, and all work and materials necessary to perform the CCTV inspection.

JJ. Three-Dimensional (3D) Survey

Three-dimensional survey shall be price to be included in the Contract price for sewer pipe, and shall cover the costs for all non-destructive methods of locating installed utilities and associated electronic deliverables per Utility Owner specifications.

Payment will be made under:

Item No. 660	Sewer Force Main, _____in (mm)	Per linear foot (meter)
Item No. 660	Sewer Gravity Main, _____in (mm)	Per linear foot (meter)
Item No. 660	Sewer Main, Ductile Iron, _____in (mm)	Per linear foot (meter)
Item No. 660	Sewer Main, Fusible PVC, _____in (mm)	Per linear foot (meter)
Item No. 660	Sewer Main, HDPE,_____in (mm)	Per linear foot (meter)
Item No. 660	Sewer Main, Concrete, _____in (mm)	Per linear foot (meter)
Item No. 660	Cured-in-Place Pipe (CIPP) Liner, _____in (mm)	Per linear foot (meter)
Item No. 660	Sewer Main, _____in (mm)	Per linear foot (meter)
Item No. 660	Steel Casing, in (mm)	Per linear foot (meter)
Item No. 660	Cleanouts, in (mm)	Per each
Item No. 660	Tapping Sleeve and Valve Assembly, in (mm)	Per each
Item No. 660	Relocation of Existing Air Release Valve Assembly, _____in (mm)	Per each
Item No. 660	Removal of Air Release Valve, _____in (mm)	Per each
Item No. 660	Cut and Plug Sewer Main, _____in (mm)	Per each

Item No. 660	Concrete Thrust Collar, _____in (mm)		Per each
Item No. 660	Gate Valve,	in (mm)	Per each
Item No. 660	Check Valve,	in (mm)	Per each
Item No. 660	Plug Valve,	in (mm)	Per each
Item No. 660	Insertion Valve,	in (mm)	Per each
Item No. 660	Air Release Valve Assembly,	in (mm)	Per each
Item No. 660	Sewer Lateral,	in (mm)	Per each
Item No. 660	Line Stop,	in (mm)	Per each

660.5.01 Adjustments

General Provisions 101 through 150.

Georgia Department of Transportation
Technical Provisions

I-285 Ramps at CR 209/ Riverside Drive Project

P.I. No. 0010925

Attachment 6-3

Special Provision 670 - Water

DEPARTMENT OF TRANSPORTATION
STATE OF GEORGIA

SPECIAL PROVISION

PROJECT: I-285 Ramps at CR 209/ Riverside Drive Project

COUNTY: Fulton County

P.I.: 0010925

Section 670—Water Distribution System

Delete Section 670 and substitute the following:

670.1 General Description

This work consists of furnishing materials, labor, tools, equipment, and other items necessary for installing, removing, abandoning, relocating, and adjusting water distribution systems according to the Plans and Specifications.

670.1.01 Definitions

A. General Provisions 101 through 150

B. Whenever the term "Utility Owner" is used in this Special Provision and its related documents, it shall be understood to mean "The Facility Owner" and its subsidiaries, successors and/or assignees.

C. The term "Project Manager" shall mean the authorized individual having the authority to give instructions pertaining to the work and to approve or reject the work. The "Project Manager" shall not however be authorized to revoke, alter, enlarge, relax, or release any requirements of the Contract, Plans, and Specifications, nor shall they act as an agent for the Contractor. All Contract items pertaining to the Utility Owner shall be coordinated with the Georgia Department of Transportation's (GDOT) Project Manager and the Utility Owner.

670.1.02 Related References

A. Standard Specifications

Section 104—Scope of Work

Section 107—Legal Regulations and Responsibility to the Public

Section 108—Prosecution and Progress

Section 205—Roadway Excavation

Section 207—Excavation and Backfill for Minor Structures

Section 210—Grading Complete

Section 400—Hot Mix Asphaltic Concrete

Construction Section 444—Sawed Joints in Existing

Pavements Section 500—Concrete Structures

Section 600—Controlled Low Strength Flowable Fill

Section 611—Relaying, Reconstructing or Adjusting to Grade of Miscellaneous Roadway Structures

Section 615—Jacking or Boring Pipe

Section 810—Roadway Materials

B. Related Documents

1. General Provisions 101 through 150.
2. All products supplied and all work performed shall be in accordance with The Facility Owner's Standard Specifications, applicable standards from American Society for Testing and Material (ASTM), American Water Works Association (AWWA), American National Standards Institute (ANSI), GDOT Utility Accommodation Policy and Standards, and the Georgia Environmental Protection Division (EPD) Minimum Standards for Public Water Systems. Latest revisions of all standards shall apply.

670.1.03 Submittals

A. General Provisions 101 through 150.

B. Refer to The Facility Owner's Standard Specifications, current published edition, for water utility submittal requirements. Copies of all submittals and documentation shall be submitted to GDOT, who shall distribute to the Utility Owner.

C. Shop Drawings / Product Data

1. Submit [6] copies of the following submittals to the GDOT Project Manager:
   a. Product data, including size, dimension, capacity, pressure rating, accessories, and special features, installation instructions, and operating characteristics for all proposed materials to show compliance with the requirements of this Special Provision.
   b. Test reports specified in the Quality Acceptance section of this Special Provision.
   c. Pipe manufacturer certification of compliance with specifications.
   d. Operation and maintenance literature, warranties, and other specified information.

D. Construction Record Documentation

1. The Contractor shall record on two sets of utility as-built drawings that will record changes and deviations from the Contract Drawings in sizes, lines or grade. Record also the exact final horizontal and vertical locations of underground utilities and appurtenances to an accuracy of +/- 0.2 ft, referenced to permanent surface improvements. Drawings shall utilize State Plane Coordinates and shall be legibly marked to record actual construction and submitted to GDOT no later than 30 days after installation and prior to Final Acceptance of the Project. The Utility Owner shall determine if the utility record drawings are complete prior to Final Acceptance of the project.
2. Record Drawings shall be signed and sealed by a professional engineer or land surveyor registered in the State of Georgia.
3. Record Drawings shall also be submitted in digital format as indicated in accordance with the Department's current Electronic Utility File Guidelines.
4. Except for standard bound materials, bind all 8.5"x11" (A4) documentation, including 11" x 17" (A3) drawings folded to 8.5"x11" (A4), in logical groupings in loose-leaf binders of either the 3-ring or plastic slide-ring type. Permanently and appropriately label each such bound grouping of documentation.

670.1.04 Quality Assurance

A. The Contractor shall comply with applicable codes, ordinances, rules, regulations and laws of local, municipal, state or federal authorities having jurisdiction over the Project.

B. Furnish manufactured items, pipe, fittings, valves, service components, and appurtenances from manufacturers having regularly produced such items as specified herein which have proven satisfactory in actual service, over at least a 2-year period, or as approved by the Utility Owner and GDOT.

C. Regardless of tolerances permitted by industry standards specified herein, the Utility Owner or the GDOT Project Manager may reject pipe or appurtenances at the manufacturing plant or project site which have cracks, chips, blisters, rough interior or exterior surface, evidence of structural weakness, joint defects, or other imperfections that might in the opinion of the Project Manager contribute to reduced functional capability, accelerated deterioration or reduced structural strength.

D. The Utility Owner and the Utility Owner's consultant shall have the right to visit and inspect the work at any time. The Utility Owner may also have an Inspector assigned to the project authorized to inspect portions or all of the utility work done and the preparation, fabrication, or manufacture of the materials to be used. The Utility Owner shall be able to advise GDOT Project Manager of any observed discrepancies or potential problems. The cost of these inspections shall be the responsibility of the Utility Owner.

E. GDOT shall notify the Utility Owner before authorizing any changes or deviations which might affect the Utility Owner's facilities. Contractor shall notify GDOT and Utility Owner a minimum of 24 hours prior to beginning work on utilities.

F. The Utility Owner shall be notified by GDOT Project Manager when all utility work is complete and ready for final inspection. The Utility Owner shall be invited to attend the final inspection and may provide a corrections list to GDOT Project Manager prior to the final inspection.

G. The Contractor shall verify the actual location and depth of all utilities prior to construction. All utilities and structures shall be protected during construction. Any damaged facilities shall be repaired or replaced at the Contractor's expense.

670.2 Materials

All materials provided shall be in conformance with the requirements and standards set forth in The Facility Owner's Standard Specifications, current published edition. All pipeline and appurtenance materials in contact with potable water shall be National Sanitation Foundation (NSF) 61 Certified and part of GDOT QPL list.

Pipes and appurtenances shall comply with Section 1417(a)(1) of the Safe Water Drinking Act as amended in 2011 which prohibits the use of any pipe, any pipe or plumbing fitting or fixture, and solder, or any flux, after June 1986, in the installation or repair of (i) any public water system; or (ii) any plumbing in a residential or non-residential facility providing water for human consumption, that is not lead free as defined in Section 1417(d).

670.2.01 Water Piping systems and Appurtenances

A. Ductile Iron Pipe and Fittings

1. Ductile iron pipe shall meet the latest edition of ANSI/AWWA C150/A21.50 and C151/A21.51 for the class and joint specified with a nominal laying length of 18 (5.5 m) to 20 feet (6 m). Joints for buried ductile iron pipe shall be mechanical or push-on joints. Unless specified otherwise in The Facility Owner's Standard Specifications, ductile iron pipe diameters 12 inch (300 mm) or less shall be minimum Pressure Class 350, while pipe diameters greater than 12 inch (300 mm) shall be minimum Pressure Class 250.
2. Ductile iron pipe for the interior of structures and above ground installations shall be flanged. Flanges shall be ductile iron and shall be threaded-on flanges conforming to ANSI/AWWA C115/A21.15 or cast-on flanges conforming to ANSI/AWWA C110/A21.10. The minimum class thickness for ductile iron flanged pipe to be threaded is Class 53.
3. Interior surfaces of ductile iron pipe and fittings shall be cement mortar lined in accordance with AWWA C104.

4. Ductile iron shall have an exterior coating as specified in AWWA C151 for ductile iron pipe and AWWA C153/C110 for ductile iron fittings.
5. Buried ductile iron pipe and fittings shall be polyethylene encased at locations indicated on the Plans or as conditions warrant. Polyethylene encasement tubing shall be in accordance with ANSI/AWWA C105/A21.5 and ASTM A674 and shall have a minimum thickness of 8 mils. Polyethylene encasement tubing shall be blue in color to designate potable water.
6. Fittings: Ductile iron fittings shall be epoxy coated and meet the requirements of ANSI/AWWA C153/A21.53 or ANSI/AWWA C110 A21.10 with a minimum pressure rating of 250 psi. Ends shall be restrained mechanical joint. All ductile iron fittings shall bear the NSF approval seal for potable water pipe.
7. Mechanical Joint Fittings: Mechanical joints consisting of bell, socket, gland, gasket, bolts, and nuts shall conform to ANSI/AWWA C111/A21.11.
8. Push-On Joints: Push-on joints shall be designed in accordance with ANSI/AWWA C111/A21.11. Joint lubrication shall be as furnished by the manufacturer.
9. Rubber gasket joints for push-on or mechanical joints shall conform to the requirements of ANSI/AWWA C111/A21.11.
10. Restrained Joints: Restrained joints shall be provided as shown on the Plans and where required for thrust restraint. Restrained joints shall not require field welding or grooves cut into the pipe barrel for restraint. The restraining joints for mechanical joint fittings shall conform to the requirements of ANSI/AWWA C111/A21.11 with assembly in conformance with AWWA C600 and manufacturer's recommendations. Restrained joints for pipe shall be mechanical joints with ductile iron retainer or push-on type joints and shall have a minimum rated working pressure of 250 psi.
11. Mechanical joint retainer glands may be used to restrain mechanical joint pipe and fittings to the plain end of ductile iron pipe and fittings. Restrainer glands shall be manufactured of ductile iron per ASTM A536.
12. Corrosion-resistant bolts used with ductile iron joints shall be high-strength, low-alloy steel as specified in ANSI/AWWA C111/A21.11.
13. Welded Outlets: Welded outlets in ductile iron pipe shall be provided where specified and indicated on the Plans. Outlets shall be fabricated by welding sections of ductile iron pipe manufactured in accordance with ANSI/AWWA C151/A21.51. Welded outlet pipe shall be fabricated only by the pipe manufacturer. The minimum ductile iron pipe thickness for fabrication of welded outlet pipe shall be Thickness Class 53 for 4-inch to 54-inch (100 to 1350 mm) diameter pipe. All joints on welded-on branch outlets shall be provided in accordance with the latest revision of ANSI/AWWA C111/A21.11 and/or ANSI/AWWA C115/A21.15, as applicable. After the outlets are welded together and prior to finishing, the assembly shall be subjected to a 15 psi air test for leakage. The maximum size and laying length of the welded-on branch outlet shall be recommended by the pipe manufacturer and acceptable to the Utility Owner for the field conditions and connecting pipe or valve.

B. Polyvinyl Chloride (PVC) Pipe

1. PVC pipe diameters 4-inch through 12-inch (100 mm to 300 mm) shall meet ANSI/AWWA C900 requirements, and shall be a minimum pipe dimension ratio (DR) 18, Pressure Class 235 psi. PVC pipe diameters 14-inch (350 mm) and greater shall meet ANSI/AWWA C905 requirements, shall be DR 18 minimum, Pressure Class 235 psi. Pipe shall have a bell with an integral wall section with a factory installed, solid cross section elastomeric ring in accordance with ASTM F477.
2. All PVC pipe shall be formulated for sunlight exposure, be blue in color to designate potable water, and bear the NSF approval seal.
3. Joints for 4-inch (100 mm) and larger PVC pipe shall meet the requirements of AWWA C900/C905, latest edition. The rubber gaskets used for the joints shall consist of flexible elastomeric material conforming to ASTM F477.

4. PVC pipe shall have the same outside diameter (OD) as ductile iron pipe and be compatible for use with ductile iron fittings.
5. Fittings for PVC pipe 4 inches (100 mm) and larger shall be ductile iron mechanical joint and comply with the requirements set forth in the specifications for Ductile Iron Pipe and Fittings.
6. Restrained Joints: Restrained joints shall be provided as shown on the Plans and where required for thrust restraint. Restrained joints shall comply with the requirements set forth in the specifications for Ductile Iron Pipe and Fittings.
7. Unless specified otherwise in the Plans or The Facility Owner's Standard Specifications, 2-inch (50 mm) and 3-inch (75 mm) diameter PVC pipe shall conform to the requirements of ASTM D2241 Class 1120 or 1220 (SDR 21) with a working pressure rating of 200 psi with integral bell gasketed joints. Pipe is to be manufactured to IPS standard pipe equivalent outside diameters.
8. Schedule 80 PVC pipes smaller than 4-inch (100 mm) nominal diameter shall be in accordance with ASTM D1785. Schedule 80 pipe shall have threaded joints. Solvent cemented joints are not allowed for buried pipes. Threaded type fittings for Schedule 80 PVC pipe shall be in conformance with ASTM D2464. All threaded joints shall be watertight.
9. Flanges for Schedule 80 PVC pipe shall be rated for a 150 psi working pressure with ANSI B16.1 dimensions and bolting pattern. Flanges shall be connected to PVC piping with threaded joints in accordance with ASTM D2467 or ASTM 2464, respectively.

C. Fusible PVC Pipe

1. Fusible PVC pipe sizes 4-inch (100 mm) to 36-inch (900 mm) shall conform to AWWA C900/C905 as applicable and follow the dimension ratios (DR) set forth in the requirements listed for PVC pipe.
2. Fusible PVC pipe shall be blue in color to designate potable water.
3. Fusible PVC pipe shall be extruded with plain ends. The ends shall be square to the pipe and free of any bevel or chamfer. There shall be no bell or gasket of any kind incorporated into the pipe.
4. Fusible PVC pipe shall be manufactured in a standard 40-foot nominal length-, or custom lengths as specified.
5. Joints shall be made by butt fusing sections of pipe with manufacturer-approved equipment.
6. Fittings shall be ductile iron mechanical joint and comply with the requirements set forth in the specifications for Ductile Iron Pipe and Fittings.

D. High Density Polyethylene (HDPE) Pipe

1. HDPE pipe sizes 4-inch (100 mm) and larger shall be a PE 4710/3408 high density, extra-high molecular weight polyethylene manufactured from first-quality high density polyethylene resin containing no additives, fillers, or extenders. The HDPE pipe shall have an ASTM D3350 cell classification of PE 445574C , shall meet the requirements of AWWA C906, and shall be sized based upon the ductile iron pipe size (DIPS), outside diameter (OD) sizing system.. The HDPE pipe shall be a minimum DR 11, pressure class 160 psi, and shall bear the NSF approval seal.
2. HDPE pipe shall be blue or marked with a permanent blue stripe to designate potable water.
3. Joints shall be made by butt fusing sections of pipe with manufacturer-approved equipment.
4. Fittings shall be ductile iron mechanical joint meeting the requirements of ANSI/AWWA C110/A21.10 and ANSI/AWWA C111/A21.11.
5. The pipe shall have fusion welded restrainer ring, follower gland, and a 12-inch (300 mm) stainless steel insert for the mechanical joint connection.
6. HDPE water mains shall be properly sized utilizing the inside diameter of the nominal pipe diameter. If during construction HDPE is substituted for other pipe materials, the Contractor shall verify that the inside diameter of the HDPE is the same or larger than the inside diameter of the pipe originally specified.

E. Steel Casing Pipe

1. All materials, design, fabrication, handling, and testing of steel casing pipe shall conform to the requirements of ASTM A139, AWWA C200 and AWWA Manual M11 "Steel Pipe – A Guide for Design and Installation."
2. Steel casing pipe shall be new, smooth-wall, carbon steel pipe conforming to ASTM Specification A139, Grade B with a minimum yield strength of 35,000 psi. Steel casings shall be used with the size, minimum thickness, length, and coating specified on the Plans or The Facility Owner's Standard Specifications.
3. Additional anti-corrosion measures, as specified by the manufacturer or indicated on the Plans, shall be provided at connectors, couplings, rollers, restraints, etc.
4. Unless specified otherwise in the Plans or The Facility Owner's Standard Specifications, casing pipe end seals shall consist of ⅛-inch (6 mm) thick flexible synthetic rubber boot with adjustable stainless steel banding straps. The annular space of the casing shall not be filled with concrete or grout.
5. Casing spacers shall consist of a stainless steel shell, PVC ribbed liner, and non-conducting separators to keep the carrier pipe from touching the casing pipe. Spacers shall be provided at a maximum of 10-foot intervals and within 2 feet (0.6 m) of the end of the casing pipe.

F. Pipe Detection Wire

1. Unless otherwise specified by the Plans or The Facility Owner's Standard Specifications, open cut installations of non-metallic pipe shall include minimum #12 gauge tracing wire. Pipe installed by directional drill shall include two (2) insulated 8 gauge tracer wire. Wire shall be solid copper insulated with HDPE installed along pipe, wrapped around service line stub outs and stubbed into valve boxes for locating purposes. Wire shall be properly spliced to provide continuous conductivity.

G. Warning Tape

1. Water mains shall be installed with polyethylene film warning tape manufactured for marking and identifying underground water utilities. Tape shall be a minimum of 2 inches (50 mm) wide and 4 mils thick, blue in color, with continuously printed letters reading "CAUTION BURIED WATER LINE BELOW".

H. Gate Valves

1. Gate valves 3 inches (80 mm) and larger shall be of the resilient seat type meeting the requirements of AWWA C509 or C515. Valves shall be iron body, bronze trimmed, with non-rising stems, and shall be fusion-bonded epoxy coated per ANSI/AWWA C550. Valves shall have a minimum design working pressure of 200 psi.
2. Valves shall be manually operated by nut and open counter-clockwise unless specified otherwise in the Plans or The Facility Owner's Standard Specifications.
3. The resilient seating arrangement shall provide zero leakage at the design working pressure when installed with line flow in either direction. All ferrous surfaces inside and outside shall have a fusion bonded epoxy coating. All valves shall be provided with O-ring seals. The design and machining of valves shall be such as to permit replacing the O-ring seals in the valves while in service without leakage.
4. All gate valves, when fully opened, shall have an unobstructed waterway diameter equal to or larger than the full nominal diameter of the valve.
5. In general, valves shall be designed for vertical installation. Valves installed in the horizontal position shall be provided with bevel gears, extended gear case, rollers, tracks, and scrapers.
6. Exposed or above-ground gate valves shall be outside screw and yoke (OS&Y) flanged joint type with an operating hand wheel. The face-to-face dimensions and drilling shall conform to ANSI B16.10 for Class 125 flanged joint end gate valves.
7. Valves shall include mechanical joints, bolts, glands, gaskets, and all other materials necessary to join to existing work.

8. Provide brass identification tag imprinted with “WATER”, valve size, valve type, and direction and number of turns to open. Provide a ¼-inch (8 mm) hole in the brass tag and attach the tag to the end of the locate wire (twist wire around tag). Tag shall be 2-inch (50 mm) diameter and ⅛-inch (6 mm) thick brass with a ¼-inch (8 mm) hole.

I. Insertion Valve

1. Insertion type valves shall be resilient wedge gate valves designed to be installed into an existing pressurized potable water main without interruption of flow through the pipe and no reduction of line pressure.
   a. Valve shall be fusion-bonded epoxy coated in compliance with AWWA C550.
   b. The construction of the resilient wedge shall comply with AWWA C509 requirements.
   c. The resilient wedge shall be fully encapsulated with EPDM rubber and shall seat on the valve body and not the pipe. The resilient wedge shall be totally independent of the carrier pipe.
   d. Valve shall be restrained to the pipe.
   e. Valves shall be suitable for operating pressures up to 250 psi.

J. Butterfly Valves

1. Butterfly valves shall be of the tight-closing, rubber seated type, with rubber seat positively locking in place sealing against flow from either direction. Valves shall be hand operated with cast or ductile iron bodies. Valves shall conform to the requirements of AWWA C504, Class 150B, and shall be fusion-bonded epoxy coated per ANSI/AWWA C550.
2. Valves shall have a 2-inch (50 mm) square operating nut and shall be installed with extension stems to extend the operating nut in accordance with the project details. Valves shall open by turning the operating nut counter clockwise unless specified otherwise in the Plans or The Facility Owner’s Standard Specifications.
3. Valve shafts shall be of 304 or 316 stainless steel.
4. Buried butterfly valve end connections shall be installed using restrained mechanical joints.
5. Flanged valves shall be fully faced and drilled in accordance with ANSI Standard B16.1, Class 125.
6. Provide brass identification tag imprinted with “WATER”, valve size, valve type, and direction and number of turns to open. Provide a ¼-inch (8 mm) hole in the brass tag and attach the tag to the end of the locate wire (twist wire around tag). Tag shall be 2-inch (50 mm) diameter and ⅛-inch (6 mm) thick brass with a ¼-inch (8 mm) hole.

K. Ball Valves

1. Ball valves 2-inch (50 mm) and smaller shall be designed for a working pressure of not less than 175 psi. End connection shall be threaded. The body and all parts shall be made in accordance with AWWA C800 and ASTM B62 latest revision.

L. Tapping Sleeves and Valve Assembly

1. Tapping sleeves and valves sizes 4-inches (100 mm) and larger shall be stainless steel with wraparound gasket style, or ductile iron of the split-sleeve, mechanical joint type. Tapping sleeves shall be rated for a minimum 150 psi working pressure in accordance with ANSI/AWWA C110/A21.10.
2. When tapping an existing asbestos cement pipe, a stainless steel tapping sleeve which contains a full gasketed surface within the sleeve body shall be used due to variances in the manufactured outside diameter of the asbestos cement pipe.
3. Tapping sleeve shall have an outlet flange per ANSI B16.1, Class 125 standard.
4. The Contractor shall determine the outside diameter of the existing main before ordering the sleeve.
5. Tapping valves shall be mechanical joint outlet, non-rising stem, resilient seated gate valves meeting the applicable requirements of ANSI/AWWA C509/C515 and C550 with a minimum design working pressure of 200 psi.
6. Tapping valves shall be specifically designed for pressure tapping with sufficient seat opening to allow full diameter taps to be made.
7. Tapping valves shall be manufactured with an integral tapping flange having a raised lip design.

8. Tapping valves shall be furnished with a combination flange and mechanical joint for connecting the branch to the main.

M. Valve Boxes

1. All valves shall be equipped with valve boxes. The valve boxes shall be heavy, roadway type boxes. The valve box cover shall be marked “WATER VALVE” or “WATER”.
2. Valve box materials shall conform to the requirements and standards set forth in the The Facility Owner’s Standard Specifications, current published edition.
3. The valve boxes shall be adjustable up or down from the nominal required cover over the pipe. Extensions shall be provided as necessary. A precast concrete ring shall be placed around the valve box opening when outside of paved areas.
4. Valves shall be furnished with extension stems as necessary to bring the operating nut to within 24 inches (600 mm) minimum of the top of the valve box.

N. Service Connection Assemblies

1. Water service connections and plumbing should conform to the standards set forth in The Facility Owner’s Standard Specifications and relevant local and/or state plumbing codes or to the Standard Plumbing Code as applicable within the jurisdiction in which the system is located.
2. Service connection assemblies shall be provided for all new service line connections to existing meters. Existing service lines indicated for replacement shall be replaced with new materials from the water main to the existing or new water meter.
3. Service connection assemblies shall include:
   a. Service saddle
   b. Corporation stop
   c. Service line
   d. Fittings
   e. Curb stop
   f. Water meter box
   g. Water meter (separate Pay Item for new service connections)
   h. Backflow preventer (separate Pay Item for new service connections)

O. Service Saddles

1. Service saddles shall have ductile iron or bronze body with stainless steel epoxy coated double tie straps and nuts with pressure rating not less than that of the pipe to which it is to be connected.
2. Saddles shall have a rubber gasket cemented to the body, with compatible threading between the saddle and corporation stop. Saddles shall conform to ANSI/AWWA C800 standards.
3. The service saddle shall provide full support around the circumference of the pipe, providing a bearing area of sufficient width so that pipe will not distort when the saddle is tightened.

P. Water Service Pipe

1. Polyethylene (PE) pipe for water service lines shall conform to AWWA C901 and ASTM D-2737 and shall be 200 psi pipe, SDR 9 for copper tube size (CTS). Polyethylene extrusion compound from which the polyethylene pipe is extruded shall comply with applicable requirements for PE 3408 ultra-high molecular weight polyethylene plastic material as specified in AWWA C901.
2. Marking on the PE service pipe shall include the nominal pipe or tubing size, the type of plastic material, the standard thermoplastic pipe dimension ratio or the pressure rating in psi, the ASTM designation with which the pipe complies, and manufacturer's name or trade mark and code. It shall also include the NSF seal of approval for use with potable water.

3. Copper tubing for water service lines shall be seamless and shall conform to ANSI/AWWA C800 and ASTM B88, Type K soft, suitable for potable water use with a working pressure of 150 psi.
4. Water service line fittings shall be as indicated in The Facility Owner's Standard Specifications.

Q. Corporation and Curb Stops

1. Corporation stops, curb stops, and other appurtenances for plastic or copper service lines shall meet the requirements of ASTM B62 and AWWA C800.
2. Service line taps shall be equipped with corporation stops. Corporation stops in sizes 1-inch (25 mm) through 2-inch (50 mm) shall be manufactured from cast bronze with machined fitting surfaces. The corporation shall be pressure rated to no less than 150 psi.
3. Curb stops shall be ball valve type and made of bronze. Pipe connections shall be suitable for the type of service pipe used and shall be pressure rated for no less than 150 psi.

R. Water Meters

1. Water meters shall conform to the requirements and standards set forth in The Facility Owner's Standard Specifications.

S. Meter Boxes

1. Water meter boxes shall be high density reinforced plastic body with one piece cast iron lid with lettering "WATER METER" on cover unless otherwise indicated on the Plans. Recessed hole shall be included in lid, if required by Utility Owner for electronic reading capability. Provide box of size and height appropriate to installation of meter and accessories required. Meter and curb stop shall be fully encased by the meter box.

T. Concrete Vault

1. Concrete vaults shall conform to the requirements and standards set forth in The Facility Owner's Standard Specifications and standard details.

U. Air Release Valve Assembly

1. Air release, air/vacuum valves, and combination air valves shall be suitable for use with potable water systems and manufactured in compliance with ANSI/AWWA C512.
2. Air release valves shall have a small venting orifice to vent the accumulation of air and other gases in the line or system under pressure.
3. Air/vacuum valves shall have a large venting orifice to permit the release of air as the line is filling or relieve the vacuum as the line is draining or is under negative pressure.
4. Combination air valves shall have operating features of both the air/vacuum valve and air release valve.
5. Valves shall be suitable for pressures up to 250 psi.
6. Air release, air/vacuum valves, and combination air valves shall conform to the requirements set forth in The Facility Owner's Standard Specifications and standard details.

V. Fire Hydrant Assembly

1. Fire hydrants shall be the compressive, post style, dry barrel type, and shall conform to the requirements of ANSI/AWWA C502 and local code requirements. The valve opening shall not be less than 4½-inch (115 mm). All hydrants shall be complete including joint assemblies.
2. Hydrants shall be suitable for working pressure of 150 psi and shall be hydrostatically factory tested to 300 psi.
3. All working parts, including the seat ring, shall be removable through the top without excavating or disturbing the barrel of the hydrant.
4. Hydrants shall be constructed with a lubricant chamber which encloses the operating threads and which provides automatic lubrication of the threads and bearing surfaces each time the hydrant is operated. This assembly shall be

comprised of a top O-ring serving as a dirt and moisture barrier and a lower O-ring which will serve as a pressure seal.

5. Hydrants shall include two 2½-inch (65 mm) hose nozzles and one 4½-inch (115 mm) pumper connection with National Standard Fire Hose Threads unless specified otherwise in the Plans or The Facility Owner's Standard Specifications. Hydrant threads shall comply with the specifications of the local agency providing fire service.
6. Hydrant nozzle shall be constructed to face in any direction at any time by removing the safety flange bolts and revolving the head without digging or shutting off water.
7. Hydrants shall have pentagon operating nut measuring 1½-inch (40 mm) point to flat and shall open by turning counter-clockwise.
8. Hydrant shall have a safety-type vertical barrel with a minimum 3½-foot bury and be designed with safety flange and/or bolts to protect the barrel and stem from damage, eliminate flooding, and allow rapid replacement if hydrant is struck. All risers necessary for deeper bury applications shall be provided by the hydrant manufacturer.
9. Hydrants shall include positive, automatic drain valves which shall be fully closed when the main valve is open.
10. Bottom inlet of hydrant shall be provided with mechanical joint connection complete with accessories as specified and shall be 6-inch (150 mm) nominal diameter.
11. Fire hydrant shall be painted above ground with rust inhibiting enamel paint in accordance with The Facility Owners Standard Specifications.
12. Hydrant assemblies shall be restrained from the hydrant to the tee at the main.

W. Backflow Prevention Devices

1. Backflow prevention devices shall be installed where indicated on the Plans and shall meet all applicable AWWA, State, and local code/ordinance requirements.
2. Backflow preventer materials shall conform to the requirements and standards set forth in The Facility Owner's Standard Specifications.

X. Thrust Collars and Thrust Blocks

1. Concrete used for thrust collars or thrust blocks shall meet the "Class A" requirements for concrete listed in Section 500.
2. Thrust collars shall include welded-on collars attached by the pipe manufacturer or retainer glands. Concrete shall be poured continuous around the pipe and bear against undisturbed earth.
3. Reinforcing steel shall meet the requirements set forth in the Plans or The Facility Owner's Standard Specification].
4. Mechanical joint restraints shall be utilized in lieu of thrust blocks with the approval of Utility Owner.

Y. Manholes

1. Precast reinforced manholes shall be manufactured in accordance with ASTM C478 and shall have a minimum wall thickness of 5 inches (127 mm). All concrete shall have a minimum compressive strength of 4,000 psi when tested in accordance with ASTM C478.
2. Joints between precast sections shall be sealed by means of rubber O-ring gaskets or flexible butyl rubber sealant.
3. Non-shrinking grout or a flexible seal shall be used to seal the pipe penetrations and prevent water from entering the manhole.
4. Manhole rings and cover shall be per The Facility Owner's Standard Specifications and standard details.

670.2.02 Delivery, Storage, and Handling

A. Handle pipe, fittings, valves, and accessories carefully to prevent damage. Handle pipe by rolling on skids, forklift, or front end loader. Do not use material damaged in handling. Slings, hooks, or pipe tongs shall be padded and used in such a manner as to prevent damage to the exterior coatings or internal lining of the pipe. Do not use chains in handling pipe, fittings, or appurtenances.

B. To unload pipe, carefully lift and lower it into position using approved padded slings, hooks, or clamps. Furnish equipment and facilities for unloading, handling, distributing, and storing pipe, fittings, valves, and accessories. Make equipment available at all times for use in unloading. Do not roll, drop or dump materials. Any materials dropped or dumped shall be subject to rejection without additional justification.

C. Stored materials including salvaged materials shall be kept in suitable areas safe from damage. The interior of all pipe, fittings, and other appurtenances shall be kept free from dirt or foreign matter at all times. Store and support plastic pipe to prevent sagging and bending. Store plastic pipe and gaskets to prevent exposure to direct sunlight. Valves and hydrants shall be stored and protected from damage by freezing.

D. Pipe shall not be stacked higher than the limits recommended by the manufacturer. The bottom tier shall be kept off the ground on timbers, rails, or concrete.

670.3 Construction Requirements

670.3.01 Personnel

A. General Provisions 101 through 150.

B. Construction and installation of all water utilities shall be performed by a Contractor prequalified/registered with GDOT.

C. All work specified in this section, except for water system service line installation shall be performed by a Contractor with a valid Utility Contractor's license issued by the State of Georgia. Water service line installation shall be performed by either a Utility Contractor licensed in the State of Georgia or by a Master Plumber licensed in the State of Georgia.

670.3.02 Equipment

A. Ensure all equipment used is in conformance with the requirements and standards set forth in The Facility Owner's Standard Specifications, current published edition.

670.3.03 Preparation

General Provisions 101 through 150.

670.3.04 Fabrication

General Provisions 101 through 150.

670.3.05 Construction

A. Finding Existing Underground Utilities and Obstructions

1. Comply with Subsection 107.13 and Subsection 107.21.
2. According to the best information available to GDOT, all known water lines, sewer lines, gas lines, telephone conduits, drainage structures, etc. are shown on the Plans. However, to find such installations, use an electronic pipe and cable finder in locating existing installations or obstructions to the work.
3. When unforeseen conflicts require Plan changes, perform the work as altered according to Subsection 104.03 and Subsection 104.04.
4. Follow all Utility Owner customer notification requirements and obtain approval from the Utility Owner and GDOT Project Manager prior to disrupting any existing water services as required to install the water facilities shown on the Plans.

B. Jack and Bore

Comply with Section 615 for sewer main installations by jack and bore.

C. Directional Drilling

1. Install water mains and services by means of directional drilling at locations shown on the Plans or where approved by GDOT or Utility Owner. Provide submittals and follow all relevant procedures and requirements set forth in The Facility Owner's Standard Specifications.
2. The Contractor shall not initiate horizontal directional drilling until all submittals are received, reviewed, and accepted by GDOT and the Utility Owner, and all required permits are obtained.

3. The Contractor shall select drilling additives and fluid mixture proportions to ensure continuous circulation, bore stability, reduce drag on the pipe, and completely fill the annular space between the bore and the pipe to ensure stability and control settlement.
4. The Contractor shall submit contingency plans for remediation of potential problems that may be encountered during the drilling operations. The contingency plans shall address the observations that would lead to the discovery of the problem and the methods that would be used to mitigate the problem. Potential problems that shall be addressed include:
   a. Loss of returns/loss of circulation of drilling fluid.
   b. Encountering obstruction during pilot bore or reaming/pullback.
   c. Drill pipe or product pipe cannot be advanced.
   d. Deviations from design line and grade exceed allowable tolerances.
   e. Drill pipe or product pipe broken off in borehole.
   f. Product pipe collapse or excessive deformation occurs
   g. Utility strike.
   h. Hydrolock occurs or is suspected.
   i. Excessive ground settlement or heave of ground surface or existing utilities.
   j. Inadvertent returns / hydrofracture or surface spills resulting in drilling fluids entering water or reaching the surface.
5. Pipe damaged in directional drilling operations shall be removed and replaced at no additional expense to GDOT or the Utility Owner.
6. Voids developed or encountered during the installation operation shall be pressure grouted with a grout mix approved by GDOT.
7. Installation shall include a locatable conduit system, with identification markers on each side of GDOT right-of-way where applicable. Two (2) insulated 8 gauge solid copper tracers wire shall be attached to the leading end of the pipe pulling head and shall extend the full length of the installed pipe.
8. The location and alignment of the pilot drill progress shall be continuously monitored for compliance with the proposed installation alignment and for verification of the depth of the bore. Monitoring shall be accomplished by computer generated bore logs which map the bore path based on x, y, z coordinate information provided by the locating/tracking system. Readings or plots shall be obtained on every drill rod, and shall be provided to the Inspector on a daily basis. Deviations between the recorded and design bore path shall be calculated and reported on the daily log. If the deviations exceed tolerances specified elsewhere, such occurrences shall be reported immediately to GDOT. The Contractor shall undertake all necessary measures to correct deviations and return to design line and grade.
9. Upon completion of the directional drill the Contractor shall furnish GDOT and the Utility Owner an as-built drawing along with a report of the monitoring of the drilling fluids during the pilot hole and back reamed hole.
10. Drilling fluid pressures, flow rates, viscosity, and density shall be monitored and recorded by the Contractor. The pressures shall be monitored at the pump. These measurements shall be included in daily logs submitted to GDOT. The Contractor shall document modifications to the drilling fluids, by noting the types and quantities of drilling fluid additives and the dates and times when introduced. The reason for the addition of drilling fluid additives or other modifications shall be documented and reported.
11. Management and disposal of drilling fluids shall be the Contractor's responsibility. Excess drilling fluids shall be contained at the entry and exit points until recycled or removed from the site. All drilling fluids shall be disposed of in a manner acceptable to the appropriate local, state and federal regulations. The Contractor's work will be immediately suspended by GDOT whenever drilling fluids seep to the surface other than in the boring entrance or exit pit, or when a paved surface is displaced.

12. Surfaces damaged by the work shall be restored to their preconstruction conditions at no additional cost to GDOT or Utility Owner, and with no increase in contract time.
13. The following items shall be as shown on the Plans, unless otherwise approved in writing by GDOT:
    a. Entry / exit points
    b. Drill entry / exit angles
    c. Pilot bore path
        1) Radius of Curvature
        2) Entry / exit tolerances: Contractor shall be solely responsible for all work necessary to correct excessive deviations from line and grade, including re-drilling, redesigning connections, and acquiring additional easement, at no additional cost to GDOT or Utility Owner and without schedule extension.
14. The pilot bore shall be pre-reamed and reamed using equipment and methods submitted by the Contractor. The Contractor shall completely ream the bore to the final diameter prior to pullback.
15. Pullback: The pipe shall be installed by pulling it into the reamed bore path in a continuous operation, behind a final reaming tool selected by the Contractor. The pipe shall be isolated from excessive torsional and axial stresses by a swivel device with a pre-established breakaway tensile capacity that is lower than the allowable tensile strength of the pipe. The maximum pull (axial tension force) exerted on the pipelines shall be measured continuously and limited to the maximum allowed by the pipe manufacturer with an appropriate factor of safety so that the pipe or joints are not overstressed. The end of the pipe shall be closed during the pull back operation.
16. Pipelines shall be adequately supported during installation so as to prevent overstressing or buckling. The Contractor shall provide adequate support/rollers along the pipe layout area to support the required length of pipe for the bore. The pipe layout area shall be cleared of all large stones, construction debris, or other foreign objects that could damage the pipe during pullback. The Contractor shall monitor and inspect pipe rollers and method for suspending pipe at entry during the pullback operation to avoid damage to the pipe.
17. The end of the pipe shall be closed during the pull back operation.
18. Each length of pipe shall be inspected and cleaned as necessary to be free of debris immediately before joining.
19. The Contractor shall at all times handle the pipe in a manner that does not overstress or otherwise damage the pipe. Vertical and horizontal curves shall be limited so that wall stresses do not exceed 50% of yield stress for flexural bending of the pipe. If the pipe is buckled or otherwise damaged, the damaged section shall be removed and replaced by the Contractor at his expense. The Contractor shall take appropriate steps during pullback to ensure that the pipe and tracer wires will be installed without damage.
20. If necessary, the pipe shall have water added as it enters the bore to achieve neutral buoyancy and reduce pullback loads and to ensure that adequate internal pressure is maintained at all points to counter balance collapse pressures.
21. The Contractor shall cease pullback operations if the pipe is damaged and shall remove the pipe from the bore and repair the pipe using the manufacturer's recommended procedure or replace the damaged pipe before resuming installation.
22. Damage to the pipe resulting from manufacturer defects, installation, or grouting is the responsibility of the Contractor, including costs for replacement and labor and materials. To confirm no damage to the pipe, upon completion of pull back, the Contractor shall pull a sphere or pig through the entire length of the pipeline. The pig shall be one inch less in diameter than the internal diameter of the product pipe, capable of allowing water to pass through it, complete with a pulling cable on either side. If the pig or sphere cannot pass through the pipe, it shall be considered collapsed and damaged.
23. After the carrier pipe is completely pulled through the bore, a sufficient relaxation period as recommended by the pipe manufacturer shall be provided before the final pipe tie-in.
24. The Contractor shall conduct a final hydrostatic test of the installed pipeline. Final test shall be in accordance with these specifications. The Contractor shall repair any defects discovered during this test, and repeat until the pipe passes the test.

D. Excavating Trenches

1. The Contractor shall provide all necessary shoring and bracing materials as required to assure safe working conditions and to protect the excavations. The Contractor shall be required to fully comply with all applicable OSHA Excavation Safety Standards. No separate payment shall be made for any special procedure used in connection with the excavation.
2. Excavate trenches to the proper depth and width as follows:
   a. Trench to Grade: Excavated trench bottoms shall be firm, free from boulders, and conform to the established grade. Limit open trench excavation to a maximum of three 300 feet (90 m) ahead of completed backfill.
   b. Care shall be taken not to over excavate except where necessary to remove unstable material, irregularities, lumps, rock, and projections. Unnecessary over excavation shall be replaced at the Contractor's sole expense and in accordance with Subsection 670.3.05.
   c. Excavation carried below the established grade lines shown or established by the Utility Owner shall be backfilled according to Section 207 and Subsection 670.3.05. Use Class I or Class II Soils (defined in Section 810) and firmly compact the soil.
   d. Where the established grade of a trench is in rock, undercut the bottom of the trench by at least 6 inches (150 mm) beneath the pipe or conduit and the greater of 24 inches (600 mm) wider than the pipe/conduit (12 inches or 300 mm each side) or 42 inches (1050 mm) wide, then backfill and compact according to Subsection 670.3.05.
   e. Excavation in pavement and pavement patching shall be according to GA Standard No. 1401. Remove the pavement according to Section 444, except no separate payment shall be made for sawed joints.
   f. Dewatering: Remove all water from excavations and maintain the excavations free of water while construction therein is in progress. Provide dewatering equipment as necessary to conform to this requirement. Dewatering procedures must meet all state and local regulatory requirements.
3. Minimum Trench Depth
   a. Excavate trenches to provide at least 48 inches (1.2 m) cover depth directly above the pipe to the finished pavement surface, sidewalk, grass, etc. unless indicated otherwise on the Plans or by the Utility Owner and GDOT Project Manager. In order to avoid existing utilities, it may be necessary for the pipe to be laid shallower or deeper than the minimum cover specified. At such time the Contractor shall not be allowed extra compensation for additional excavation necessary for deeper installations.
   b. Side slopes of the trenches shall be as nearly vertical as practicable. Trenches in excess of 5 feet (1.5 m) deep shall either have the trench sides laid back to conform to OSHA requirements for trench safety, if such area is available within the limits of excavation, or, alternatively, trenches deeper than 5 feet (1.5 m) shall be excavated via trench box or shored and braced.
   c. If any part of a water main is to be placed in or under a new embankment, finish the embankment to at least a 2-foot plane above the outermost portion of the pipe barrel before excavating the trench.
4. Trench Width: Excavate trenches to uniform widths wide enough to allow proper installation of pipe, fittings, and other materials, a minimum of 6 inches (150 mm) and a maximum of 12 inches (300 mm) each side of the pipe or conduit.
5. Trench Bell Holes: Excavate bell holes deeply and widely enough to make joints and to allow the pipe barrel to rest firmly on the trench bottom.
6. Trench bottom: Excavate and shape trench bottoms to provide uniform bearing and support of pipes and conduits. Shape subgrade to provide continuous support of bells, joints, and barrels of pipes and for joints, fittings, and bodies of conduits/pipes. Remove projecting stones, tree roots, debris, and sharp objects along trench subgrade. Abrupt changes in grade of the trench bottom shall be avoided. Unless otherwise indicated in the Plans or The Facility Owner's Standard Specifications, trenches for water mains shall be graded as much as possible to avoid high and low points that necessitate air release valves.

7. Excavations may be completed and refilled either by hand or by machinery. Hand tool excavation shall be conducted where necessary to protect existing utilities and structures.
8. In the event that unsuitable material is encountered at or below the excavation depth specified or shown on the Plans, the Utility Owner and GDOT Project Manager shall be notified. Such material shall be removed and replaced with suitable material in accordance with Section 205 by the written request of the GDOT Manager.

E. Connecting to Existing Mains

1. Connect to an existing main with the appropriate fittings according to the Plans or the Utility Owner and GDOT Project Manager. When making connections under pressure, (i.e. when normal water service must be maintained), furnish and use a tapping sleeve and valve assembly or line stop fittings as indicated. Coordinate with Utility Owner 72 hours in advance for water service interruptions and temporary shut-offs. Evening or weekend work may be required to complete direct connections and tie-ins. Connect to existing mains as follows:
   a. Before opening new pipeline trenches, locate the various points of connection to be made into existing pipelines. If necessary, uncover pipelines for the Utility Owner and GDOT Project Coordinators to prescribe the connections and fittings needed.
   b. Connect to existing pipelines only to meet operating requirements. Cut existing lines only after obtaining the Utility Owner and GDOT Project Manager' permission.
   c. Provide temporary line stops, associated fittings, and bypass pumping as indicated on the Plans and as necessary when cutting and plugging existing water mains to prevent service interruptions. Line stop and associated fittings shall be suitable for working pressures of 250 psi.
   d. Connections to existing asbestos cement pipe shall be installed as indicated on the Plans or in The Facility Owner's Standard Specifications. Cutting, removing, handling, and disposing of asbestos cement pipe shall be in accordance with requirements established by EPA, OSHA, GDOT, NIOSH, and the State of Georgia Environmental Protection Division, and any other applicable laws and ordinances.

F. Laying Water Mains and Appurtenances

1. Preparing and Handling Pipes
   a. Thoroughly clean the pipe and fittings before laying them. Keep them clean until accepted.
   b. Use suitable tools and equipment. Do not damage the pipe, especially the cement lining inside the pipe.
   c. Cut pipe in a manner to avoid damage to pipe or lining, leaving a smooth end at right angles to pipe axis. Smooth and bevel edges of cut pipe for push-on, gasket type joints.
   d. Bedding shall be provided as specified by the Utility Owner or pipe manufacturer for the type of conditions encountered. Bedding typically consists of granular soil free of lumps, clods, cobbles, and frozen materials, and shall be graded to a firm-but-yielding surface without abrupt changes in bearing value. Unstable soils and rock ledges shall be undercut from the bedding zone and replaced with suitable material.
   e. Bed pipe on coarse granular material in flat bottom trench with entire pipe barrel bearing uniformly on coarse granular material, except for an approximately 18-inch (450 mm) gap at pipe balance point for sling removal. Hand excavate and backfill as required to provide uniform and continuous bearing and support for the pipe. Do not support pipe on hubs or end bells. Consolidate coarse granular material under and around pipe up to pipe centerline by tamping.
   f. Join pipe with bells facing direction in which laying operation is progressing. Lay pipe upgrade wherever line grade exceeds 10%.
   g. Carefully examine pipe for cracks and other defects and do not lay defective pipe. If pipe or castings appear to be cracked, broken, or defective after laying, remove and replace those sections.
2. Alignment and Gradient

a. Pipe alignment and gradient shall conform to the Plans. Deflect pipe lines only where indicated on the Plans, within allowable horizontal and vertical deflection angles according to the manufacturer.

b. Water mains shall be laid at least 10 feet (3 m) horizontally from any existing or proposed sanitary sewer, storm sewer or sewer manhole. The distance shall be measured edge-to-edge. When local conditions prevent a horizontal separation of 10 feet (3 m), the water main may, on a case-by-case basis, be laid closer to a sewer provided the water main is laid in a separate trench or on an undisturbed earth shelf located on one side of the sewer at such an elevation that the bottom of the water main is at least 18 inches (450 mm) above the top of the sewer.

c. Maintain a vertical separation of at least 18 inches (450 mm) between the crown of sanitary sewers and the invert of existing or proposed water mains with the sewer located below the water main. Where a vertical separation of 18 inches (450 mm) cannot be provided, and the water main cannot be relocated to provide adequate clearance, center one full length of water main over the sewer so that both joints of the water main will be as far from the sewer as possible.

3. Special Requirements for Laying Water Mains

a. Excavate, clean, lay, joint, and backfill progressively and uniformly according to these requirements:

1) Never leave pipe in the trench overnight without completely jointing and capping.

2) Do not leave completed pipeline exposed in the trench. Backfill and compact the trench as soon as possible after laying, jointing, and testing are complete.

3) At the close of work each day and when laying pipe, close the exposed end of the pipeline in the trench with an approved wood or metal head or barrier.

4) If necessary to cover the end of an incomplete pipeline with backfill, close the end of the pipe with a satisfactory cap or plug.

G. Installing Water Mains by Open Cut

1. Use the following flexible joints for connections inside the roadway shoulders or curbs and gutters:

a. Mechanical Joints:

1) When using mechanical joints, thoroughly wash bell sockets, spigots, gland, gasket, nuts, and bolts with soapy water before assembly. Keep these parts wet until the jointing operation is complete.

2) Tighten nuts within the torque range recommended by the manufacturer. Check the tightening tolerance with a torque wrench.

3) If effective sealing is not attained at the maximum recommended torque, disassemble, thoroughly clean, then reassemble the joint.

4) Do not overstress bolts to compensate for improper installation or defective parts.

b. Push-On Type Joints

1) Use push-on joints made according to the manufacturer's recommendations.

2) Install PVC pipe in accordance with AWWA C605.

3) Install ductile iron pipe in accordance with AWWA C600.

2. Restraints for pipe joints and fittings shall be provided as specified and as shown on the Plans. Restraints shall be installed per manufacturer's recommendations.

3. Buried ductile iron pipe and fittings shall be polyethylene encased as specified and as indicated on the Plans. Polyethylene encasement tubing shall be secured with polyethylene tape and installed in accordance with ANSI/AWWA C105/A21.5.

4. Unless otherwise specified by The Facility Owner's Standard Specifications, provide pipe detection wire on all non-metallic pipe systems. Tape the tracer wire to the top center of the pipe at intervals which prevent wire displacement during backfilling operations. Stub tracer wire up 6 inches (150 mm) above finished grade at all valves

and fire hydrants. For splices, use direct bury kits. After backfilling is complete, test electrical continuity of each tracer wire segment and provide test results to Utility Owner and GDOT Project Manager.

5. Install continuous underground warning tape during backfilling of trench for underground water distribution piping. Install 12 inches (300 mm) below finished grade, or 6 inches (150 mm) below subgrade under pavements and walkways, and buried directly over piping.
6. Use pipe cutters when cutting pipe or special castings. Do not use a hammer, chisel, or a cutting torch.
7. Locations where water mains do not meet minimum depth of cover requirements shall include a steel casing or concrete encasement installed per The Facility Owner's Standard Specifications.
8. If HDPE pipe is to be installed where high groundwater table or water surrounding the pipe is expected, precautions shall be taken to provide neutral buoyancy to prevent floatation or a change in alignment.
9. Isolation Valves on Water Mains: Install and joint gate and butterfly valves as specified in Subsection 670.2.01 in accordance with AWWA C600. Include the valve box and valve marker where required.
10. Air release valves shall be located at high elevation points on the pipeline. Air release valves shall be installed at locations indicated in the Plans and in accordance with manufacturer's recommendations.
    a. Air release valves shall be installed in a shallow manhole or vault as indicated in the Plans and The Facility Owner's Standard Specifications. Automatic air relief valves shall not be used in areas where flooding of the manhole or vault may occur.
    b. An isolation valve shall be installed between the air release assembly and the connection to the main.
    c. The Contractor shall furnish and install at no additional cost to GDOT or Utility Owner all necessary fittings for the installation of air release valves at high points.
11. Pressure reducing/sustaining valves of the size and type indicated shall be installed as shown on the Plans per manufacturer's recommendations and The Facility Owner's Standard Specifications.
12. Fire Hydrants: Install and joint hydrants as specified in Subsection 670.2.01 and in accordance with AWWA C600. Include required vertical extension sections. Also, include pipe strap installation, restraints, crushed stone drain, and backfill according to the Plans and this Section. Spacing of fire hydrants shall be as indicated in The Facility Owner's Standard Specifications.
13. Concrete Thrust Collars and Thrust Blocks: If required, furnish materials and install thrust collars or concrete blocking according to Subsection 670.2.01. Form and pour concrete thrust collars or blocks in accordance with the Plans and The Facility Owner's Standard Specifications. Blocking shall be poured against undisturbed earth and all forms shall be removed before backfilling.
14. Backfilling
    a. Furnish equipment, labor, and when necessary material required for backfilling the pipe line trenches according to Section 207, and as follows:
        1) When testing for visual leaks in open trenches, do not backfill until testing is complete and leaks are eliminated.
        2) When retaining pavement adjacent to trenches, replace removed pavement with the same or better material when approved in accordance with the appropriate Section for the pavement type replaced.
        3) Place backfill on subgrades free of mud, frost, snow, or ice.
        4) Place and compact bedding course on trench bottoms and where indicated. Shape the bedding course to provide continuous support for bells, joints, and barrels of pipes and for joints, fittings, and bodies of conduits/pipes.
        5) Backfill shall include Class I or Class II Soils as defined in Section 810 or suitable material that conforms with The Facility Owner's Standard Specifications.
        6) Backfill shall be placed in two stages: first, side fill to a height of 12 inches (300 mm) above the top of pipe; second, overfill to former surface grade. Side fill shall consist of granular material laid in 6-inch (150

mm) layers each consolidated by mechanical tamping and controlled addition of moisture, to a density of 95% as determined by as determined by the Standard Proctor test (AASHTO T-99 Method D) or GDT 67. Overfill shall be layered and consolidated to match the entrenched material in cohesion and compaction. The top 12 inches (300 mm) shall be compacted to 100% of specified density. Consolidation by saturation or ponding shall not be permitted.

7) Soil Moisture Control: Uniformly moisten and aerate subgrade and each subsequent fill or backfill soil layer before compaction to within 2% of optimum moisture content. Remove and replace, or scarify and air dry, otherwise satisfactory soil material that exceeds optimum moisture content by 2% and is too wet to compact to specified dry unit weight.

8) Initial backfill shall be carefully compacted under pipe haunches and evenly up on both sides and along the full length of piping or conduit to avoid damage or displacement of piping or conduit. Place and compact fill and backfill of satisfactory soil to final subgrade elevation. Backfill voids with satisfactory soil while removing shoring and bracing and/or trench boxes.

9) After backfilling, maintain temporary surface restoration per GA Standard No. 1401 until permanent repaving is complete. No separate payment shall be made for replaced pavement.

15. Disinfection of Water Mains

a. New and existing pipelines and appurtenances shall be disinfected before placing into service. Disinfection can be conducted in conjunction with the pressure test.

b. Before the main is chlorinated, it shall be filled to eliminate air pockets and shall be flushed to remove particulates.

c. During disinfection of the water mains, an appropriate cross-connection control device, consistent with the degree of hazard, shall be provided for backflow protection of the active distribution system.

d. Chlorination: Sterilize using only potable water with calcium hypochlorite (HTH), 1% chlorine solution, or other products acceptable to the Utility Owner and GDOT Project Manager and Department of Public Health. Comply with AWWA C651 including Section 9 procedures on final connections to existing mains.

1) The chlorine solution used for disinfection of water mains shall have a free chlorine residual concentration not less than 25 mg/L or in accordance with The Facility Owner's Standard Specifications.

2) Add enough disinfectant to provide a chlorine residual of not less than 10 parts per million (ppm) in 24 hours or as required in The Facility Owner's Standard Specifications. All valves and hydrants shall be operated to ensure disinfection of the appurtenances.

3) At the end of 24 hours, check the chlorine residual. If it is less than 10 ppm, add additional chlorine and check the line again after 24 hours.

e. After the applicable retention period, the chlorinated water must not be disposed in a manner that will harm the environment. Neutralizing chemicals, such as Sulfur Dioxide, Sodium Bisulfite, Sodium Sulfite or Sodium Thiosulfate can be used to neutralize the chlorine residual remaining in the water to be wasted.

f. After sterilization, flush the line with potable water until the chlorine residual is equal to the existing system.

1) After final flushing and before the water main is placed into service, water samples shall be collected from the main and tested for microbiological quality in accordance with the Georgia Rules for Safe Drinking Water. Samples shall be taken in the presence of the Utility Owner and GDOT Project Manager.

2) When test results are not satisfactory, the pipeline shall be flushed and disinfected again as necessary without additional compensation until satisfactory results are obtained.

H. Laying Service Lines and Appurtenances

1. Except as modified in this Section, construct and install service connection assemblies and lines according to the Plans and the requirements for laying water mains. Install service lines at locations shown on the Plans or where designated by the Utility Owner and GDOT Project Manager.

2. Install new pipe from the water main to the final location of the meter or to points designated by the Utility Owner and GDOT Project Manager to connect with existing or future service lines on abutting property.
3. No water service connections shall be performed until the main is tested and disinfected. Water service lines shall be tested and disinfected prior to connection to the main.
4. If required, install water service line inside casing pipe according to the Plans or The Facility Owner's specification document.
5. At roads, paved drives, retaining walls, and other paved areas, install service tubing or casing pipe by pushing, pulling, or augering techniques. At all other locations, install service tubing by trenching and backfilling unless directed otherwise by GDOT.
6. Service line installation includes all connections using saddles, unions, valves, fittings, corporation stops, curb stops, casing, and any and all appurtenant work required to provide a complete water service connection.
7. Excavate for service lines as specified in Subsection 670.3.05 with the following exceptions:
   a. Ensure that trenches under pavements and across driveways are deep enough to provide at least 48 in (1.2 m) of cover, unless otherwise specified by The Facility Owner's Standard Specifications or directed by the Utility Owner and GDOT Project Manager.
   b. At other areas, trench depth and backfill cover may be adjusted at the discretion of the Utility Owner and GDOT Project Manager to provide at least 18 in (450 mm) of cover.
8. Backfill service lines as specified in Subsection 670.3.05.
9. All service lines, fittings, and appurtenances necessary for the water service connections shall be installed and backfilled in accordance with the manufacturer's recommendations and as per The Facility Owner's Standard Specifications and standard details.

I. Cutting and Capping Existing Water Mains

1. Disconnect by sawing or cutting and removing a segment of existing pipe where cutting and capping or plugging is shown on the Plans or directed by the Utility Owner or GDOT Project Manager. Provide a watertight pipe cap or plug and restraint mechanism to seal off existing mains indicated to remain in service. If water main is to be abandoned or removed and not specified to be grout filled, seal ends with a pipe cap or plug or with a masonry plug and minimum 6-inch (150 mm) cover of concrete on all sides around the end of the pipe.
2. The Contractor shall be responsible for uncovering and verifying the size and material of the existing main to be capped or plugged.
3. Abandoned manholes and water mains greater than 6-inch (150 mm) shall be filled with flowable fill per Section 600 at the locations indicated on the Plans. Air release valves and water service connections along the abandoned main shall be plugged prior to grouting. Prior to backfilling, the bottom of the manhole shall be broken up in such a manner that water will readily pass through. The top portion of the manhole structure shall be removed in order to establish a minimum of 3 feet cover from subgrade or finished grade when not under the pavement and filled with sand or suitable backfill.
4. Water mains shall be flushed prior to placement of flowable fill. Use concrete or grout pumps capable of continuous delivery at planned placement rate with sufficient pressure to overcome friction and fill the sewer main.

J. Relocating, Adjusting, and Removing

1. Fire Hydrant Assemblies
   a. Relocate, adjust to grade, or remove fire hydrant assemblies including valve and valve boxes according to the Plans or as designated by the Utility Owner and GDOT Project Manager.
   b. Protect items during removal and relocation. Replace lost or damaged Items at no expense to GDOT or the Utility Owner.
   c. Disconnect each joint before removing items from the trench.

d. Install relocated fire hydrant assemblies with tapping sleeve, and as specified herein for new fire hydrant assemblies.
e. Test for leakage, adjust, and retest until no leaks appear.
f. Backfill as specified in Subsection 670.3.05.
g. Consider valve boxes part of the valve assembly and remove them intact with the valve.

2. Water Valves and Boxes
   a. Adjust or remove water valves and valve boxes according to the Plans or as designated by the Utility Owner and GDOT Project Manager.
   b. Protect items during adjustment or removal. Replace lost or damaged Items at no expense to GDOT or the Utility Owner.
   c. Disconnect each joint before removing items from the trench.
   d. Test for leakage, adjust, and retest until no leaks appear.
   e. Backfill as specified in Subsection 670.3.05.
   f. Consider valve boxes part of the valve assembly and remove them intact with the valve.
3. Existing Water Meters and Boxes
   a. Relocate existing water meters and boxes according to the Plans or the Utility Owner and GDOT Project Manager.
   b. To relocate water meters, remove the existing meter, associated backflow preventer, and box and replace with a short section of pipe.
   c. Inspect along with the Utility Owner and GDOT Project Manager each meter and backflow preventer before removal to determine the condition of each.
   d. Unless specified otherwise in the Plans or The Facility Owner's Standard Specifications, new water meters and backflow preventers shall be furnished by the Contractor as necessary if these devices are deemed unsuitable for reuse. Contractor shall provide new water meter boxes if deemed unsuitable for reuse. The Contractor shall coordinate delivery of the water meters and backflow preventers to correspond to construction operations to minimize service interruptions.
   e. Relocation of water meters and boxes shall include without additional compensation, required pipe, unions and appurtenances, adapter fittings, necessary storage protection, and installation of meter, backflow preventer, meter box, and curb stop in the existing service line.
4. Existing Water Service Lines
   a. Water lines shall be adjusted to grade by excavating the existing lines, lowering or raising the lines, and backfilling according to the Plans or the Utility Owner and GDOT Project Manager.
   b. Furnish new materials or fittings required for the adjustment without additional compensation.
   c. Change connections at the main that result from this work.
   d. Repair leaks and damage caused by the operations at no expense to GDOT.
   e. When retaining a water meter where an existing service line is to be adjusted, adjust the existing meter and box to the proper grade without additional compensation.
5. Other Water Appurtenances
   a. Relocate, adjust to grade, or remove water main appurtenances including but not limited to air release valves, backflow preventers, pressure reducing/sustaining valves according to the Plans or as designated by the Utility Owner and GDOT Project Manager.
6. Utility related items identified on the Plans to be salvaged are the property of the Utility Owner. Contractor shall coordinate with Utility Owner on delivery of salvaged materials. Should the Utility Owner choose to not accept these materials they shall be removed from the project site as soon as practical.

K. Aerial Crossings

1. Support must be provided for all joints in pipes utilized for aerial crossings. The supports must be installed to prevent frost heave, overturning, and settlement. Precautions against freezing, such as insulation, shall be provided.

2. When the aerial crossing is accomplished by attachment to a bridge or drainage structure, the crossing shall meet all requirements of the agencies that own or have jurisdiction over such structures.
3. Aerial installations shall be installed to avoid or minimize stream blockage during normal high water events.
4. Underground valves shall be provided at both ends of the aerial crossing so that the section can be isolated for testing or repair. The valves shall be restrained, easily accessible, and not subject to flooding. An air release/vacuum relief valve shall be installed at all high points along the aerial crossing.
5. Appropriate guards shall be installed at both ends of the aerial crossing to prevent public access to the pipe.

670.3.06 Quality Acceptance

A. Materials Certification

For certain products, assemblies and materials, not on GDOT QPL List, and in lieu of normal sampling and testing procedures by the Contractor, the Utility Owner, and GDOT may accept from the Contractor the manufacturer's certification with respect to the product involved under the conditions set forth in the following paragraphs:

1. Material certifications shall be provided to GDOT, who shall distribute to the Utility Owner. Material certifications shall be approved by GDOT and the Utility Owner prior to construction. The certification shall state/specify that the named product conforms to these specifications and requirements of the Utility Owner and GDOT, and representative samples thereof have been sampled and tested as specified.
2. The certification shall either:
   a. Be accompanied by a certified copy of the test results, or
   b. Certify such test results are on file with the manufacturer and will be furnished to the Utility Owner and GDOT Project Coordinators upon demand.
3. The certification shall state/specify the name and address of the manufacturer and the testing agency and the date of tests; and sets forth the means of identification which shall permit field determination of the product delivered to the project as being the product covered by the certification.
4. Submit certification in triplicate with two copies of the covered product to the GDOT Project Coordinator, and one copy sent to GDOT's State Materials and Research Engineer at 15 Kennedy Drive, Forest Park, Georgia. The certification shall specify the project number and contract ID number. No certificate shall be required for Portland cement when furnished from a manufacturer approved by GDOT.
5. GDOT or the Utility Owner will not be responsible for any costs of certification or for any costs of the sampling and testing of products in connection therewith.
6. GDOT and the Utility Owner reserve the right to require samples and test products for compliance with pertinent requirements irrespective of prior certification of the products by the manufacturer. Any materials that fail to meet specification requirements will be rejected.
7. In accordance with the BUY AMERICA requirements of the Federal regulations (23 U.S.C. 313 and 23 CFR 635.410) all manufacturing processes for steel and iron products or predominantly of steel or iron (at least 90% steel or iron content) furnished for permanent incorporation into the work on this project shall occur in the United States. The only exception to this requirement is the production of pig iron and the processing, pelletizing and reduction of iron ore, which may occur in another country. Other than these exceptions, all melting, rolling, extruding, machining, bending, grinding, drilling, coating, etc. must occur in the United States.
   a. Products of steel include, but are not limited to, such products as structural steel piles, reinforcing steel, structural plate, steel culverts, guardrail steel supports for signs, signals and luminaires, and cable wire/strand. Products of iron include, but are not limited to, such products as cast iron frames and grates and ductile iron pipe. Coatings include, but are not limited to, the applications of epoxy, galvanizing and paint. The coating material is not limited to this clause, only the application process.

b. Records to be provided by the Contractor for this certification shall include a signed mill test report and a signed certification by each supplier, distributor, fabricator, and manufacturer that has handled the steel or iron product affirming that every process, including the application of a coating, performed on the steel or iron product has been carried out in the United States of America, except as allowed by this Section. The lack of these certifications will be justification for rejection of the steel and/or iron product or nonpayment of the work.

c. The requirements of said law and regulations do not prevent the use of miscellaneous steel or iron components, subcomponents and hardware necessary to encase, assemble and construct the above products, manufactured products that are not predominantly steel or iron or a minimal use of foreign steel and iron materials if the cost of such materials used does not exceed one-tenth of one percent (0.1%) of the total contract price or $2,500.00, whichever is greater.

B. Flushing

1. Prior to testing, water mains shall be cleaned and flushed to remove all sand and foreign matter. Water used for filling and cleaning shall be from an approved potable water source. Sufficient flushing water shall be introduced into the mains to produce a scouring velocity of not less than 3.5 feet per second to resuspend the solids, and this rate of flow shall be continued until the discharge is clear and no evidence of silt or foreign matter is visible. The Contractor shall dispose of all water used for flushing without causing a nuisance or property damage.
2. In the event that the Contractor cannot obtain the flushing velocity, a poly-pig swab may be used to clean the pipeline. The Contractor shall submit pigging plan to the Utility Owner and GDOT for review. The plan shall include type of pig material, water flow rate, discharge points, poly-pig detector and retrieval options.

C. Hydrostatic Testing of Water Mains

1. When the Utility Owner and GDOT Project Manager approve a section of pipe for testing, the Contractor shall furnish the materials, equipment, and labor to conduct the pressure and leakage tests. Use a test pump, pressure gauge, and a means of measuring the water necessary to maintain the required pressure during the prescribed testing time. All pressure and leakage testing shall be done in the presence of the Utility Owner and GDOT Project Coordinators as a condition precedent to the approval and acceptance of the system. All pipes shall have been thoroughly flushed prior to testing. Simultaneous or separate pressure and leakage tests may be performed.
2. All water for testing and flushing shall be potable water provided by the Contractor, at no cost to the Utility Owner or GDOT, from an approved source. Flow velocity during line filling shall not exceed 2 feet (0.6 m) per second (fps).
3. Testing Requirements

   a. Water mains shall be tested in sections between valves, thereby, testing each valve for secure closure. Testing shall be done immediately after installation and backfilling has been completed.

   b. The mains shall be tested in accordance with the latest revision of AWWA C600 for ductile iron and C605 for PVC under an average hydrostatic pressure of the greater of 1.5 times the maximum working pressure or 150 psi as measured at the lowest point in the system for a minimum of 2 hours. Pressure shall be maintained until all sections under testing have been checked for evidence of leakage.

   c. While the system is being filled with water, air shall be carefully and completely exhausted. If permanent air vents are not located at all high points, the Contractor shall install corporation stops or fittings and valves at such points at no additional expense to the Utility so the air can be expelled as the pipe system is slowly filled.

   d. Makeup water shall be added, as required, to maintain the pressure within 5 psi of the test pressure. The quantity used shall be measured by pumping from a calibrated container. The maximum amount of makeup water allowed shall be determined by the following formula:

$$L = \frac{SD\ P^{0.5}}{148{,}000}$$

in which,

L = Allowable Leakage in gallons per hour

S = Length of pipe being tested in feet

D = Nominal pipe diameter in inches

P = Average test pressure during the test in psi gauge

e. Visible leaks shall be corrected regardless of total leakage shown by test. All pipe fittings and other materials found to be defective under test shall be removed and replaced. Lines which fail to meet test requirements shall be repaired and retested as necessary until test requirements are met. No additional compensation shall be made for repairs or retesting.

670.3.07 Contractor Warranty and Maintenance

General Provisions 101 through 150.

670.4 Measurement

Incidentals including excavation, rock removal, backfilling, disinfection, testing, temporary water connections, pavement removal, pavement replacement, and other incidentals required for the installation of water distribution items are not measured for separate payment and shall be included in the applicable Pay Items below. Water mains, service lines, and other associated Items of work in this Specification, complete, in place, and accepted, are measured for payment as follows:

A. Ductile Iron Water Mains

Ductile iron water mains shall be measured in linear feet (meters) for each size, thickness class, and type (restrained, non-restrained) installed. Measurement shall be horizontally above the centerline of the pipe and shall include the length of valves and fittings.

B. PVC Water Main

PVC water mains shall be measured in linear feet (meters) for each size and type (restrained, non-restrained) installed. Measurement shall be horizontally above the centerline of the pipe and shall include the length of valves and fittings.

C. Fusible PVC Water Main

Fusible PVC water mains shall be measured in linear feet (meters) for each size and type installed. Measurement shall be horizontally above the centerline of the pipe and shall include the length of valves and fittings.

D. HDPE Water Main

HDPE water mains shall be measured in linear feet (meters) for each size and type installed. Measurement shall be horizontally above the centerline of the pipe and shall include the length of valves and fittings.

E. Ductile Iron Fittings

Ductile iron fittings are considered subsidiary to the water line in which they are used and are not measured for separate payment. This Item includes, but is not limited to, wyes, tees, bends, crosses, sleeves, plugs and caps, and reducers.

F. Restrained Joints

Joint restraints used with the installation of PVC or ductile iron pipe are considered subsidiary to the water line in which they are used and are not measured for separate payment.

G. Gate Valves

Gate valves shall be measured on an individual basis for each size valve and box assembly acceptably installed.

H. Butterfly Valves

Butterfly valves shall be measured on an individual basis on the number of each size valve and box assembly acceptably installed.

I. Tapping Sleeve and Valve Assembly

Tapping sleeve and valve assemblies shall be measured on an individual basis on the number of each size tapping sleeve and valve assembly acceptably installed.

J. Double Strap Saddle

Double strap saddles shall be measured on an individual basis on the number of each size double strap saddle acceptably installed.

K. Fire Hydrant Assemblies

Fire hydrant assemblies shall be measured on an individual basis on the number of hydrants acceptably installed.

L. Water Service Lines

Service lines shall be measured in linear feet (meters) for each size of service pipe installed. Measurements are made from end to end and from center of lines to ends of branches and include tapping saddle, sleeve, valves, service connection assemblies, sleeves, adapters, and fittings.

M. Air Release Valve Assembly

Air release valve assemblies shall be measured on an individual basis on the number of each size and type of air release valve assembly acceptably installed.

N. Pressure Reducing / Sustaining Valve

Pressure reducing/sustaining valve shall be measured on an individual basis on the number of each pressure reducing/sustaining valves acceptably installed.

O. Blow-Off Assemblies

Blow-off assemblies shall be measured on an individual basis on the number of each blow-off assembly acceptably installed.

P. Backflow Prevention Assembly

Backflow prevention assemblies shall be measured on an individual basis on the number of each size and type backflow preventer acceptably installed.

Q. Water Meter

Water meters shall be measured on an individual basis on the number of each size meter acceptably installed.

R. Steel Casing

Steel casing pipe of the wall thickness and diameter specified shall be measured by the linear foot for each size and thickness of steel casing pipe installed. Measurement shall be horizontally above the centerline of the casing.

S. Relocation of Existing Fire Hydrant Assemblies, Air Release Valves, Water Meters, Water Backflow Preventers, Pressure Reducing or Sustaining Valves, Water Valves and Water Meter including Bypass and Vault

Relocation of existing fire hydrant assemblies, air release valves, water meters, backflow preventers, pressure reducing or sustaining valves, water valves, and water meter including bypass and vault shall be measured on an individual basis on the number of each acceptably relocated including relocation and final adjustment of boxes.

T. Adjustment of Existing Meter Boxes and Valve Boxes to Grade

Adjustment of existing meter boxes and valve boxes adjusted to grade in their original locations shall be measured on an individual basis on the number of each acceptably adjusted in accordance with Section 611.

U. Adjustment of Blow-Off Assembly

Adjustment of blow-off assembly to grade in their original locations shall be measured on an individual basis on the number of each acceptably adjusted.

V. Adjustment of Existing Fire Hydrant Assembly

Adjustment of existing fire hydrant assembly to grade in their original locations shall be measured on an individual basis on the number of each acceptably adjusted.

W. Adjustment of Existing Backflow Preventers

Adjustment of existing backflow preventers to grade in their original locations shall be measured on an individual basis on the number of each acceptably adjusted.

X. Removal of Water Meters, Fire Hydrant Assemblies, Backflow Preventers, Water Valves, and Air Release Valves

Removal of existing water meters and boxes, fire hydrants assemblies, backflow preventers, water valves, and air release valves, shall be measured on an individual basis on the number of each removed.

Y. Adjustment of Water Service Lines

Adjustment of water service lines shall be measured in linear feet (meters) of service line pipe lowered or raised, and shall include the length of valves, fittings, meters, boxes, and other appurtenances. Measurements are made from end to end of actual adjustments.

Z. Concrete Thrust Blocks

Concrete thrust blocking installed shall be measured as indicated in Section 500 per cubic yard of concrete acceptably installed. When Concrete Thrust Blocks is not shown as a pay item, include the cost of the work in the bid price for the appropriate item.

AA. Concrete Thrust Collars

Concrete thrust collars shall be measured on an individual basis on the number of each size thrust collar acceptably installed. When Concrete Thrust Collars is not shown as a pay item, include the cost of the work in the bid price for the appropriate item

BB. Cut and Plug Existing Water Main

Cutting and plugging of existing water mains shall be measured on an individual basis per each instance of cutting and plugging existing mains as shown on the Plans.

CC. Removal of Water Mains

Unless specified removal of water mains shall be removed in accordance with Section 210. If specified removal of water mains shall be measured per linear foot for each size pipe actually removed in accordance with Section 610. Measurement shall be horizontally above the centerline of the pipe removed and shall include the length of valves and fittings.

DD. Line Stop

Line stops shall be measured on an individual basis on the number of each size line stop actually installed.

EE. Flowable Fill

Flowable fill shall be measured as indicted in Section 600 per cubic yard of flowable fill acceptably installed. When flowable fill is not shown as a pay item, include the cost of the work in the bid price for the appropriate item.

FF. Insertion Valve

Insertion valves shall be measured on an individual basis on the number of each size valve acceptably installed.

GG. Three-Dimensional (3D) Survey

Three-dimensional survey shall be measured as one lump sum for a complete and accepted survey. This item will be included in the overall pipe measurement. No separate payment for this work.

670.4.01
Limits

General Provisions 101 through 150.

670.5
Payment

The Contract Unit Price for each Item, complete and accepted, shall include all costs incidental to the construction of the Item according to the Plans and as specified in this Section. The unit prices bid shall include due allowance for the salvage value of all materials removed from existing or temporary lines and not installed in the completed work. All such surplus items shall become the property of the Contractor unless such surplus items are specified to be salvaged. Payment for any Item listed below is full compensation for the Item or Items complete in place.

A. Ductile Iron Water Mains

Ductile iron mains shall be paid for at the unit price per linear foot for each diameter pipe installed and shall cover the cost for all materials, transportation, labor, equipment, excavation, sheeting and shoring, installation of pipe, joints and jointing materials, anchoring, warning tape, polyethylene encasement, protection of existing utilities, connections to existing water mains, sampling taps, temporary blow-offs, flushing, cleaning, pigging, chlorine for disinfection, disinfection, backfilling, backfill materials, disposal of unsuitable backfill material, tamping, testing, densities, utility crossings, dewatering, trench stabilization, clean-up, restoration and all work and materials necessary to place the pipe into service.

B. PVC Water Main

PVC water mains shall be paid for at the unit price per linear foot for each diameter pipe installed and shall cover the cost for all materials, transportation, labor, equipment, excavation, sheeting and shoring, installation of pipe, anchoring, tracer wire, warning tape, protection of existing utilities, connections to existing water mains, sampling taps, temporary blow-offs, flushing, cleaning, pigging, chlorine for disinfection, disinfection, backfilling, backfill materials, disposal of unsuitable backfill material, tamping, testing, densities, utility crossings, dewatering, trench stabilization, clean-up, restoration, and all work and materials necessary to place the pipe into service.

C. Fusible PVC Water Main

Fusible PVC water mains shall be paid for at the unit price per linear foot for each diameter pipe installed and shall cover the cost for all materials, transportation, labor, equipment, excavation, sheeting and shoring, entry/exit pits, installation of pipe, joints and jointing materials, tracer wire, warning tape, mechanical joint adapters, protection of existing utilities, connections to existing water mains, fusion process materials and equipment, directional drilling materials and equipment, tracking system, assembling, welding, supporting, stringing, pulling, pigging, cleaning, sampling taps, temporary blow-offs, flushing, chlorine for disinfection, disinfection, backfilling, backfill materials, disposal of unsuitable backfill material, tamping, testing, densities, utility crossings, dewatering, trench stabilization, clean-up, and restoration, and all incidentals necessary to place the pipe into service except where such items are shown to be paid for under a separate Pay Item.

D. HDPE Water Main

HDPE water mains shall be paid for at the unit price per linear foot for each diameter pipe installed and shall cover the cost for all materials, transportation, labor, equipment, excavation, sheeting and shoring, entry/exit pits, installation of pipe, tracer wire, warning tape, mechanical joint adapters, protection of existing utilities, connections to existing water mains, fusion process materials and equipment, directional drilling materials and equipment, tracking system, assembling, welding, supporting, stringing, pulling, pigging, cleaning, sampling taps, temporary blow-offs, flushing,

chlorine for disinfection, disinfection, backfilling, backfill materials, disposal of unsuitable backfill material, tamping, testing, densities, utility crossings, dewatering, trench stabilization, clean-up, and restoration, and all incidentals necessary to place the pipe into service except where such items are shown to be paid for under a separate Pay Item.

E. Ductile Iron Fittings

Ductile iron fittings are considered subsidiary to the water line in which they are used and are not measured for separate payment as outlined in the manufacturers' catalogues and shall cover the cost for all materials, transportation, labor, equipment, excavation, sheeting and shoring, installation of fittings, joints and jointing materials, anchoring, warning tape, polyethylene encasement, protection of existing utilities, flushing, chlorine for disinfection, disinfection, backfilling, backfill materials, disposal of unsuitable backfill material, tamping, testing, densities, utility crossings, dewatering, trench stabilization, clean-up, restoration, all other related and necessary materials, work and equipment required to install a complete and operable pipeline fitting. This Item includes, but is not limited to, wyes, tees, bends, crosses, sleeves, plugs and caps, couplings, and reducers.

F. Restrained Joints

Restrained joints are considered subsidiary to the water line in which they are used and are not measured for separate payment as outlined in the manufacturers' catalogues and shall cover the cost for all materials, transportation, labor, equipment, excavation, sheeting, shoring, installation of the restraint device, polyethylene encasement, protection of existing utilities, backfilling, backfill material, disposal of unsuitable backfill materials, tamping, testing, densities, utility crossings, dewatering, trench stabilization, clean-up, restoration, and all work and materials necessary to install the restrained joint.

G. Gate Valves

Gate valves shall be paid for at the unit price per each size gate valve and box assembly installed and shall cover the cost for all materials, transportation, labor, equipment, excavation, sheeting and shoring, installation of the gate valves (including valve box), concrete pad or collar, valve identification disc, valve marker, valve tag, polyethylene encasement, protection of existing utilities, chlorine for disinfection, disinfection, backfilling, backfill material, disposal of unsuitable backfill materials, tamping, testing, densities, utility crossings, dewatering, trench stabilization, clean-up, restoration, and all work and materials necessary to install the gate valve and place it in service.

H. Butterfly Valves

Butterfly valves shall be paid for at the unit price per each size butterfly valve and box assembly installed and shall cover the cost for all materials, transportation, labor, equipment, excavation, sheeting and shoring, installation of the butterfly valves including valve box, concrete pad or collar, valve identification disc, valve marker, valve tag, polyethylene encasement, protection of existing utilities, chlorine for disinfection, disinfection, backfilling, backfill material, disposal of unsuitable backfill materials, tamping, testing, densities, utility crossings, dewatering, trench stabilization, clean-up, restoration and all work and materials necessary to install the butterfly valve and place it in service.

I. Tapping Sleeve and Valve Assembly

Tapping sleeve and valves assemblies shall be paid for at the unit price per each size tapping sleeve and valve assembly installed and shall cover the cost for all materials, transportation, labor, equipment, excavation, sheeting and shoring, installation of tapping sleeves and valve assemblies including valve box, concrete pad or collar, valve marker, valve tag, polyethylene encasement, protection of existing utilities, tapping the potable water main, chlorine for disinfection, disinfection, sampling points, backfilling, backfill material, disposal of unsuitable backfill materials, tamping, testing, densities, utility crossings, dewatering, trench stabilization, clean-up, restoration, and all work and necessary hardware to install the tapping sleeve assembly and valve and place it in service.

J. Tapping Sleeve

Tapping sleeves shall be paid for at the unit price per each size tapping sleeve installed and shall cover the cost for all materials, transportation, labor, equipment, excavation, sheeting and shoring, installation of tapping sleeves, concrete pad

or collar, valve marker, valve tag, polyethylene encasement, protection of existing utilities, tapping the potable water main, chlorine for disinfection, disinfection, sampling points, backfilling, backfill material, disposal of unsuitable backfill materials, tamping, testing, densities, utility crossings, dewatering, trench stabilization, clean-up, restoration, and all work and necessary hardware to install the tapping sleeve and place it in service.

K. Double Strap Saddle

Double strap saddles shall be paid for at the unit price per each size double strap saddle installed and shall cover the cost for all materials, transportation, labor, equipment, excavation, sheeting and shoring, installation of double strap saddles, concrete pad or collar, valve marker, valve tag, polyethylene encasement, protection of existing utilities, tapping the potable water main, chlorine for disinfection, disinfection, sampling points, backfilling, backfill material, disposal of unsuitable backfill materials, tamping, testing, densities utility crossings, dewatering, trench stabilization, clean-up, restoration, and all work and necessary hardware to install the double strap saddle.

L. Fire Hydrant Assembly

Fire hydrant assemblies shall be paid for at the unit price per each hydrant installed and shall cover the cost for all materials, transportation, labor, equipment, excavation, sheeting and shoring, installation of the fire hydrant assemblies (all configurations), vertical extensions, tapping sleeve, valve, hydrant lead piping, joint connections, fittings, tees, restraints, crushed stone drain, polyethylene encasement, protection of existing utilities, valve box, concrete pad or collar, valve identification disc, valve marker, valve tag, chlorine for disinfection, disinfection, backfilling, backfill material, disposal of unsuitable backfill materials, tamping, testing, densities, utility crossings, dewatering, trench stabilization, clean-up, restoration, and all work and materials necessary to install the fire hydrant assembly and place it in service.

M. Water Service Line

Water service lines shall be paid for at the unit price per linear feet (meters) of the size service line installed and shall cover the cost for all materials, transportation, labor, equipment, excavation, sheeting and shoring, installation of water service line, tracer wire, tapping saddle, sleeve, corporation stops, fittings, curb stops, casing pipe, plugging abandoned water service connection, removal of abandoned water service line, protection of existing utilities, locating and connection to existing or new water main, chlorine for disinfection, disinfection, sampling points, backfilling, backfill materials, disposal of unsuitable backfill material, tamping, testing, densities, utility crossings, dewatering, trench stabilization, clean-up, restoration, and all work and materials necessary to place the water service line into service. Water meter and box shall be paid for under a separate Pay Item.

N. Water Meter and Box

Water meters shall be paid for at the unit price per each size water meter installed and shall cover the cost for all materials, transportation, labor, equipment, excavation, sheeting and shoring, installation of the meter and box, adjustment to final grade, fittings, protection of existing utilities, chlorine for disinfection, disinfection, backfilling, backfill materials, disposal of unsuitable backfill material, tamping, testing, densities, utility crossings, dewatering, trench stabilization, clean-up, restoration, and all work and materials necessary to place the meter into service except where such items are to be paid for under a separate Pay Item.

O. Backflow Prevention Assembly

Back flow prevention assemblies shall be paid for at the unit price per each type backflow preventer installed and shall cover the cost for all materials, transportation, labor, equipment, excavation, sheeting and shoring, installation of the backflow preventer, concrete vault, adjustment to final grade, testing and certification, fittings, tees, restraints, protection of existing utilities, chlorine for disinfection, disinfection, backfilling, backfill materials, disposal of unsuitable backfill material, tamping, testing, densities, utility crossings, dewatering, trench stabilization, clean-up, restoration, and all work and materials necessary to place the meter into service except where such items are to be paid for under a separate Pay Item.

P. Air Release Valve Assembly

Air release valve assemblies shall be paid for at the unit price per each size and type of air release valve assembly installed and shall cover the cost for all materials, transportation, labor, equipment, excavation, sheeting and shoring, installation of the air release assembly, tapping saddle, isolation valve, reducers, piping, restraints, fittings, tracer wire, concrete manhole or vault, ring and cover, protection of existing utilities, chlorine for disinfection, disinfection, backfilling, backfill materials, disposal of unsuitable backfill material, tamping, testing, densities, utility crossings, dewatering, trench stabilization, clean-up, restoration, and all work and materials necessary to place the air release assembly into service.

Q. Pressure Reducing / Sustaining Valve

Pressure reducing / sustaining valve shall be paid for at the unit price per each size and type of pressure reducing / sustaining valve installed and shall cover the cost for all materials, transportation, labor, equipment, excavation, sheeting and shoring, installation of the pressure reducing / sustaining valve, reducers, piping, restraints, fittings, tracer wire, concrete manhole or vault, ring and cover, tracer wire, protection of existing utilities, chlorine for disinfection, disinfection, backfilling, backfill materials, disposal of unsuitable backfill material, tamping, testing, densities, utility crossings, dewatering, trench stabilization, clean-up, restoration, and all work and materials necessary to place the pressure reducing / sustaining valve into service.

R. Blow-Off Assembly

Blow-off assemblies shall be paid for at the unit price per each blow-off assembly installed and shall cover the cost for all materials, transportation, labor, equipment, excavation, sheeting and shoring, installation of the blow-off assembly, valves, valve boxes, concrete pad or collar, piping, restraints, fittings, tracer wire, protection of existing utilities, chlorine for disinfection, disinfection, backfilling, backfill materials, disposal of unsuitable backfill material, tamping, testing, densities, utility crossings, dewatering, trench stabilization, clean-up, restoration, and all work and materials necessary to place the blow-off assembly into service.

S. Steel Casing

Steel casing pipe shall be paid for at the unit price per linear foot according to the diameter and thickness of the steel casing installed and shall cover the cost for all materials, transportation, labor, equipment, excavation, sheeting and shoring, protection of existing utilities, steel casing pipe, skid, steel straps, coatings, casing spacers, end seals, boring and jacking pits, backfilling, backfill materials, disposal of unsuitable backfill material, tamping, testing, densities, dewatering, trench stabilization, clean-up, restoration, and all work and materials necessary to install the steel casing except where such items are shown to be paid for under a separate Item. The carrier pipe shall be paid from other applicable Pay Item.

T. Relocation of Existing Air Release Valve

Relocation of air release valves shall be paid for at the unit price per each air release valve assembly relocated and shall cover the cost for all materials, transportation, labor, equipment, excavation, sheet and shoring, removal of existing air release valve assembly, installation at another location, piping, restraints, tracer wire, fittings, adjustment to final grade, polyethylene encasement, protection of existing utilities, chlorine for disinfection, disinfection backfilling, backfill material, disposal of unsuitable backfill materials, tamping, testing, densities, dewatering, trench stabilization, clean-up, restoration and all work necessary to locate, remove and relocate the air release valve except where such items are shown to be paid for under a separate Pay Item.

U. Relocation of Existing Fire Hydrant Assembly

Relocation of fire hydrants shall be paid for at the unit price per each hydrant assembly relocated and shall cover the cost for all materials, transportation, labor, equipment, excavation, sheet and shoring, removal of existing fire hydrant assembly, installation at another location, vertical extensions, hydrant lead piping, joint connections, fittings, tees,

restraints, crushed stone drain, polyethylene encasement, valve box, concrete pad or collar, valve identification disc, valve marker, adjustment to final grade, protection of existing utilities, chlorine for disinfection, disinfection, backfilling, backfill material, disposal of unsuitable backfill materials, tamping, testing, densities, dewatering, trench stabilization, clean-up, restoration, and all work necessary to locate, remove and relocate the hydrant.

V. Relocation of Existing Backflow Prevention Devices

Relocation of backflow prevention devices shall be paid for at the unit price per each backflow preventer relocated and shall cover the cost for all materials, transportation, labor, equipment, excavation, sheet and shoring, removal of existing backflow preventer, installation at another location, adjustment to final grade, testing and certification, fittings, tees, restraints, protection of existing utilities, chlorine for disinfection, disinfection, backfilling, backfill material, disposal of unsuitable backfill materials, tamping, testing, densities, dewatering, trench stabilization, clean-up, restoration, and all work necessary to locate, remove and relocate the backflow prevention device. The service line from the main to the relocated backflow preventer shall be paid for under a separate Pay Item.

W. Relocation of Water Meter and Box

Relocation of existing water meter and boxes shall be paid for at the unit price of each water meter and box relocated and shall cover the cost of all materials, transportation, labor, equipment, excavation, sheeting and shoring, removal of existing water meter and box, installation at another location, adjustment to final grade, protection of existing utilities, chlorine for disinfection, disinfection, backfilling, backfill material, disposal of unsuitable backfill materials, tamping, testing, densities, utility crossings, dewatering, trench stabilization, clean-up, restoration, and all work and materials necessary to relocate the water meter and box except where such items are shown to be paid for under a separate Item. The new service line from the main to the relocated meter shall be paid for under a separate Pay Item.

X. Relocation of Water Meter, including Bypass and Vault

Relocation of existing water meter including bypass and vault shall be paid for at the unit price of each water meter including bypass and vault relocated and shall cover the cost of all materials, transportation, labor, equipment, excavation, sheeting and shoring, removal of existing water meter, bypass and vault, installation at another location, adjustment to final grade, protection of existing utilities, chlorine for disinfection, disinfection, backfilling, backfill material, disposal of unsuitable backfill materials, tamping, testing, densities, utility crossings, dewatering, trench stabilization, clean-up, restoration, and all work and materials necessary to relocate the water meter including bypass and vault except where such items are shown to be paid for under a separate Item. The new service line from the main to the relocated meter, bypass and vault shall be paid for under a separate Pay Item.

Y. Relocation of Pressure Reducing/Sustaining Valve

Relocation of pressure reducing/sustaining valve shall be paid for at the unit price of each pressure reducing/sustaining valve relocated and shall cover the cost of all materials, transportation, labor, equipment, excavation, sheeting and shoring, removal of existing water meter and box, installation at another location, adjustment to final grade, protection of existing utilities, chlorine for disinfection, disinfection, backfilling, backfill material, disposal of unsuitable backfill materials, tamping, testing, densities, utility crossings, dewatering, trench stabilization, clean-up, restoration, and all work and materials necessary to relocate the water meter and box except where such items are shown to be paid for under a separate Item. The new service line from the main to the relocated pressure reducing/sustaining valve shall be paid for under a separate Pay Item.

Z. Relocation of Water Valve and Box

Relocation of existing water valves and boxes shall be paid for at the unit price of each water valve and box relocated and shall cover the cost of all materials, transportation, labor, equipment, excavation, sheeting and shoring, removal of existing water meter and box, installation at another location, adjustment to final grade, protection of existing utilities, chlorine for disinfection, disinfection, backfilling, backfill material, disposal of unsuitable backfill materials, tamping, testing, densities, utility crossings, dewatering, trench stabilization, clean-up, restoration, and all work and materials

necessary to relocate the water meter and box except where such items are shown to be paid for under a separate Item. The new service line from the main to the relocated valve shall be paid for under a separate Pay Item.

AA. Adjustment of Existing Water Service Line

Adjustment of existing water service lines shall be paid in accordance with Section 611, for at the unit price per linear foot of service line adjusted and shall cover the cost of all materials, transportation, labor, equipment, excavation, sheeting and shoring, adjustment of service line, tracer wire and splices, chlorine for disinfection, disinfection, backfilling, backfill material, disposal of unsuitable backfill materials, tamping, testing, densities, dewatering, trench stabilization, clean-up, restoration, and all work and materials necessary to adjust the service line except where such items are shown to be paid for under a separate Pay Item.

BB. Adjustment of Existing Water Valve Boxes to Grade

Adjustment of existing valve boxes shall be paid for in accordance with Section 611, at the unit price per each valve box adjusted to final grade and shall cover the cost of all materials, transportation, labor, equipment, excavation, sheeting and shoring, valve case and lid, trench adapter and operating nut extensions/reductions, tracer wire and splices, tracer wire riser and threaded plug, concrete pad, valve identification disc, backfilling, backfill material, disposal of unsuitable backfill materials, tamping, testing, densities, dewatering, trench stabilization, clean-up, restoration, and all work and materials necessary to adjust the valve box.

CC. Adjustment of Blow-off Assembly

Adjustment of existing blow-off assemblies shall be paid for at the unit price per each blow-off adjusted to final grade and shall cover the cost of all materials, transportation, labor, equipment, excavation, sheeting and shoring, valve case and lid, trench adapter and operating nut extensions/reductions, tracer wire and splices, tracer wire riser and threaded plug, piping, concrete pad or collar, valve identification disc, chlorine for disinfection, disinfection, backfilling, backfill material, disposal of unsuitable backfill materials, tamping, testing, densities, dewatering, trench stabilization, clean-up, restoration, and all work and materials necessary to adjust the blow-off assembly.

DD. Adjustment of Existing Water Meter Boxes to Grade

Adjustment of existing meter boxes shall be paid for at the unit price per each meter box adjusted to finished grade and shall cover the cost of all materials, transportation, labor, equipment, excavation, sheeting and shoring, adjustment of water meter box to final grade, protection of existing utilities, backfilling, backfill material, disposal of unsuitable backfill materials, tamping, testing, densities, dewatering, trench stabilization, clean-up, restoration, and all work and materials necessary to adjust the water meter box.

EE. Adjustment of Backflow Preventer

Adjustment of existing backflow preventers shall be paid for at the unit price per each backflow preventer adjusted to finished grade and shall cover the cost of all materials, transportation, labor, equipment, excavation, sheeting and shoring, adjustment of backflow preventer to final grade, adjustment of backflow preventer vault to final grade, protection of existing utilities, backfilling, backfill material, disposal of unsuitable backfill materials, tamping, testing, densities, dewatering, trench stabilization, clean-up, restoration, and all work and materials necessary to adjust the water meter box.

FF. Adjustment of Existing Fire Hydrant Assembly to Grade

Adjustment of existing fire hydrants shall be paid for , at the unit price per each hydrant adjusted to finished grade and shall cover the cost of all materials, transportation, labor, equipment, excavation, sheeting and shoring, adjustment of hydrant, protection of existing utilities, chlorine for disinfection, disinfection, backfilling, backfill material, disposal of unsuitable backfill materials, tamping, testing, densities, dewatering, trench stabilization, clean-up, restoration, and all work and materials necessary to adjust the hydrant.

GG. Removal of Water Valve and Box

Removal of water valves shall be paid for at the unit price per each valve removed and shall cover the cost for all materials, transportation, labor, equipment, excavation, sheet and shoring, removal of existing water valve and box, protection of existing utilities, backfilling, backfill material, disposal of unsuitable backfill materials, tamping, testing, densities, dewatering, trench stabilization, clean-up, restoration, storage and delivery of removed valves identified to be salvaged, and all work necessary to remove the valve and box.

HH. Removal of Water Meter and Box

Removal of water meters shall be paid for at the unit price per each meter removed and shall cover the cost for all materials, transportation, labor, equipment, excavation, sheet and shoring, removal of existing water meter and box, protection of existing utilities, backfilling, backfill material, disposal of unsuitable backfill materials, tamping, testing, densities, dewatering, trench stabilization, clean-up, restoration, storage and delivery of removed meters and boxes identified to be salvaged, and all work necessary to remove the meter.

II. Removal of Fire Hydrant Assembly

Removal of fire hydrant assemblies shall be paid for at the unit price per each hydrant assembly removed and shall cover the cost for all materials, transportation, labor, equipment, excavation, sheet and shoring, removal of existing fire hydrant assembly, protection of existing utilities, backfilling, backfill material, disposal of unsuitable backfill materials, tamping, testing, densities, dewatering, trench stabilization, clean-up, restoration, storage and delivery of removed hydrants identified to be salvaged, and all work necessary to remove the hydrant.

JJ. Removal of Air Release Valve

Removal of air release valves shall be paid for at the unit price per each air release valve removed and shall cover the cost for all materials, transportation, labor, equipment, excavation, sheeting and shoring, removal of air release valve assemblies, piping, concrete manholes or vaults, and fabricated enclosures, backfilling, backfill materials, disposal of unsuitable backfill materials, tamping, testing, densities, dewatering, trench stabilization, clean-up, restoration, storage and delivery of air release valves identified to be salvaged, and all work necessary to remove the air release valve.

KK. Removal of Backflow Prevention Devices

Removal of backflow prevention devices shall be paid for at the unit price per each backflow preventer removed and shall cover the cost for all materials, transportation, labor, equipment, excavation, sheet and shoring, removal of existing backflow preventer and vault, protection of existing utilities, backfilling, backfill material, disposal of unsuitable backfill materials, tamping, testing, densities, dewatering, trench stabilization, clean-up, restoration, storage and delivery of removed backflow preventers identified to be salvaged, and all work necessary to remove the backflow preventers.

LL. Concrete Thrust Blocks

Concrete thrust blocks shall be paid for at the unit price per cubic yard of concrete complete in place as indicated in Section 500 and shall cover the cost of all materials, transportation, labor, equipment, excavation, sheeting and shoring, concrete, forming, reinforcement, protection of existing utilities, backfilling, backfill material, disposal of unsuitable backfill materials, tamping, testing, densities, dewatering, trench stabilization, clean-up, restoration, and all work and materials necessary to install a complete thrust block. When Concrete Thrust Blocks is not shown as a pay item, include the cost of the work in the bid price for the appropriate item

MM. Concrete Thrust Collars

Concrete thrust collars shall be paid for at the unit price per each size of thrust collar and shall cover the cost of all materials, transportation, labor, equipment, excavation, sheeting and shoring, reinforced concrete thrust collars, retainer glands, reinforcement, protection of existing utilities, backfilling, backfill material, disposal of unsuitable backfill materials, tamping, testing, densities, dewatering, trench stabilization, clean-up, restoration, and all work and materials necessary to install a complete thrust collar. When Concrete Thrust Collar is not shown as a pay item, include the cost of the work in the bid price for the appropriate item.

NN. Removal of Water Main

Removal of water mains shall be paid for at the unit price per linear foot of the size of water main to be removed in accordance with Section 610 and shall cover the cost for all materials, transportation, labor, equipment, excavation, sheeting and shoring, protection of existing utilities, backfilling, backfill material, disposal of unsuitable backfill materials, tamping, testing, densities, dewatering, trench stabilization, clean-up, bypass pumping (as required), restoration, and all work and materials necessary to locate, remove and dispose of the pipe and associated appurtenances. Unless indicated for removal in a separate Pay Item, appurtenances to be removed shall include but not be limited to fittings, isolation valves, air release valves, valve boxes, blow-offs, steel casings, casing spacers, fire hydrant assemblies, water service lines, water meter boxes, thrust blocks, and concrete. All such surplus items shall become the property of the Contractor unless specified to be salvaged by the Utility Owner.

OO. Cut and Plug Existing Water Main

Cutting and plugging of existing water mains shall be paid for at the unit price per each installation and shall cover all materials, transportation, labor, equipment, excavation, sheeting and shoring, protection of existing utilities, backfilling, backfill material, disposal of unsuitable backfill materials, tamping, testing, densities, dewatering, trench stabilization, clean-up, restoration, and all work and materials necessary to cut and plug existing water mains, except where such items are shown to be paid for under a separate Pay Item.

PP. Line Stops

Line stops shall be paid for at the unit price per each size line stop installed and shall cover the cost for all materials, transportation, labor, equipment, excavation, sheeting and shoring, installation of the line stop assemblies, valves, valve boxes, fittings, restraints, protection of existing utilities, chlorine for disinfection, disinfection, sampling points, backfilling, backfill material, disposal of unsuitable backfill materials, tamping, testing, densities, utility crossings, dewatering, trench stabilization, clean-up, restoration, and all work and materials necessary to install the gate valve and place it in service.

QQ. Flowable Fill

Flowable fill shall be paid for at the unit price per cubic yard of flowable fill complete in place as indicated in Section 600 and shall cover the cost for all materials, transportation, labor, equipment, excavation, sheeting and shoring, flushing, plugging air release valves and service connections, installation of flowable fill, protection of existing utilities, backfilling, backfill material, disposal of unsuitable backfill materials, tamping, testing, densities, utility crossings, dewatering, trench stabilization, clean-up, restoration, and all work and materials necessary to install the gate valve and place it in service. When flowable fill is not shown as a pay item, include the cost of the work in the bid price for the appropriate item

RR. Insertion Valve

Insertion valves shall be paid for at the unit price per each size valve inserted and shall cover the cost for all materials, transportation, labor, equipment, excavation, sheeting and shoring, installation of the valve, valve boxes, fittings, restraints, concrete pad or collar, valve identification disc, valve marker, polyethylene encasement**,** protection of existing utilities, chlorine for disinfection, disinfection, sampling points, backfilling, backfill material, disposal of unsuitable backfill materials, tamping, testing, densities, dewatering, trench stabilization, clean-up, restoration, and all work and materials necessary to install the insertion valve and place it in service.

SS. Three-Dimensional (3D) Survey

Three-dimensional survey cost will be included in the overall pipe measurement and no separate payment for this work will be made, and it shall cover the costs for all non-destructive methods of locating installed utilities and associated electronic deliverables per Utility Owner specifications.

Payment will be made under:

Item No. 670	Water Main_____in (mm)	Per linear foot (meter)

Item No. 670	Gate Valve_____in (mm)	Per each
Item No. 670	Tapping Sleeve and Valve Assembly __ in (mm) x____in (mm)	Per each
Item No. 670	Fire Hydrant	Per each
Item No. 670	Water Service Line_____in (mm)	Per linear foot (meter)
Item No. 670	Relocate Existing Fire Hydrant	Per each
Item No. 670	Relocate Existing Air Release Valve Assembly	Per each
Item No. 670	Relocate Existing Water Valve including Box	Per each
Item No. 670	Relocate Existing Water Meter including Box	Per each
Item No. 670	Adjust Water Service Line to Grade	Per linear foot (meter)
Item No. 670	Remove Existing Water Meter including Box	Per each
Item No. 670	Steel casing_____in (mm)	Per linear foot (meter)
Item No. 670	Butterfly valve_____in (mm)	Per each
Item No. 670	Double strap saddle_____in (mm) x_____in (mm)	Per each
Item No. 670	Tapping Valve, ___in(mm)	Per each
Item No. 670	Air Release Valve Assembly_____in (mm)	Per each
Item No. 670	Water Meter, ___in	Per each
Item No. 670	Insertion Valve, ____in	Per each
Item No. 670	Line Stop_____in (mm)	Per each
Item No. 670	Cut and Plug Existing Water Main	Per each
Item No. 670	Blow-Off Assembly, Complete	Per each
Item No. 670	Pressure Reducing/Sustaining Valve	Per each
Item No. 670	Backflow Prevention Assembly	Per each
Item No. 670	Concrete Thrust Collar, _____in	Per each
Item No. 670	Relocate Backflow Prevention Assembly	Per each
Item No. 670	Relocate Existing Water Meter, including Bypass & Vault_____in (mm)	Per each
Item No. 670	Relocate Pressure Reducing/Sustaining Valve	Per each
Item No. 670	Adjust Blowoff Assembly	Per each
Item No. 670	Adjust Fire Hydrant Assembly	Per each
Item No. 670	Adjust Backflow Preventer	Per each
Item No. 670	Remove Existing Water Valve, including Box	Per each
Item No. 670	Remove Existing Fire Hydrant	Per each
Item No. 670	Remove Existing Backflow Preventer	Per each
Item No. 670	Remove Existing Air Release Valve	Per each

670.5.01 Adjustments

General Provisions 101 through 150.

Georgia Department of Transportation
Technical Provisions

I-285 Ramps at CR 209/ Riverside Drive Project

P.I. No. 0010925

Attachment 11-1

Specification for Roadway Lighting

Specification

Catalogue

LEDGINE

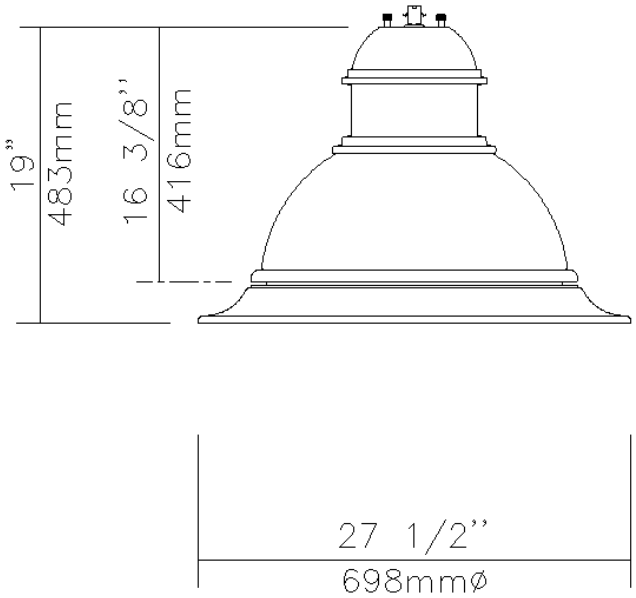

EPA: 1.42 sq ft / weight: 42 lb (19.09 kg)
Note: 3D image may not represent color or option selected.
Logos above include link, click to access.

Qty **1** Luminaire **DMS50-135W80LED4K-ES-LE3F-VOLT-GN8TX**

Description of Components:

Hood: A die cast A360.1 aluminum dome complete with a cast-in technical ring with latch and hinge. The mechanism shall offer toolfree access to the inside of the luminaire. An embedded memory-retentive gasket shall ensure weatherproofing.

Housing: In a round shape, this housing is made of cast 356 aluminum, c/w a watertight grommet, mechanically assembled to the bracket with four bolts 3/8-16 UNC. This suspension system permits for a full rotation of the luminaire in 90 degree increments.

Light Engine: LEDgine composed of 4 main components: **LED lamp / Optical System / Heat Sink / Driver**
Electrical components are RoHS compliant.

Lens: Made of soda-lime clear tempered glass lens, mechanically assembled and sealed onto the lower part of the heat sink.

Lamp: *(Included)*, Lamp type Philips Lumileds Rebel ES. Composed of 80 high-performance white LEDs, 135w lamp wattage. Color temperature of 4000 Kelvin nominal, 70 CRI. Operating lifespan based on LM80 results after which 50% still emits over 70% (L70) of its original lumen output. Use of a metal core board insures greater heat transfer and longer lifespan of the light engine. The LED circuit board is included with a connector, (no connection wire required for ease of replacement).

Optical System: (LE3F), I.E.S type III (asymmetrical). Composed of high-performance acrylic refractors lenses to achieve desired distribution optimized to get maximum spacing, target lumen's and a perfect lighting uniformity. System is rated IP66. Performance shall be tested per LM63 and LM79 and TM15 (IESNA) certifying its photometric performance.

Heat Sink: Heat Sink: Made of die cast A360 aluminum optimising the LEDs efficiency and life, complete with a cast in skirt and technical ring. Product does not use any cooling device with moving parts (only passive cooling device)

Driver: High power factor of 95%. Electronic driver, operating range 50-60 Hz. **Auto-adjusting to a voltage between 120 and 277 volt AC rated for both application line to line or line to neutral, Class I**, THD of 20% max. Maximum ambient operating temperature from -40F(-40C) to 130F(55C) degrees. Certified in compliance to cULus requirement. Dry and damp location. Assembled on a unitized removable tray with Tyco quick disconnect plug resisting to 221F(105C) degrees.

The current supplying the LEDs will be reduced by the driver if the internal temperature exceeds 176F(80C), as a protection to the LEDs and the electrical components. Output is protected from short circuits, voltage overload and current overload. Automatic recovery after correction.

Surge Protector: LED Driver 3 poles 10KV surge Protectors that protect Line-Ground, Line-Neutral, and Neutral-Ground in accordance with IEEE / ANSI C62.41.2 guidelines.

Specification

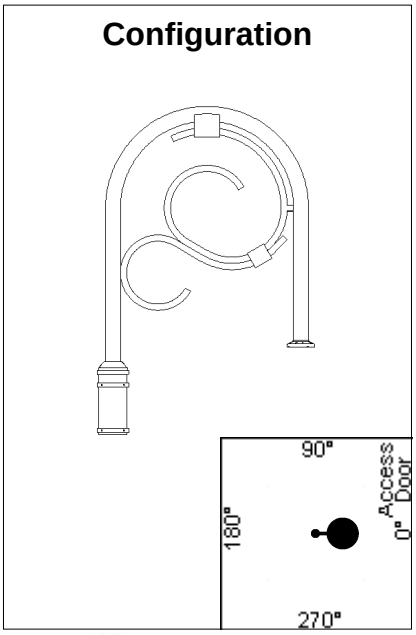

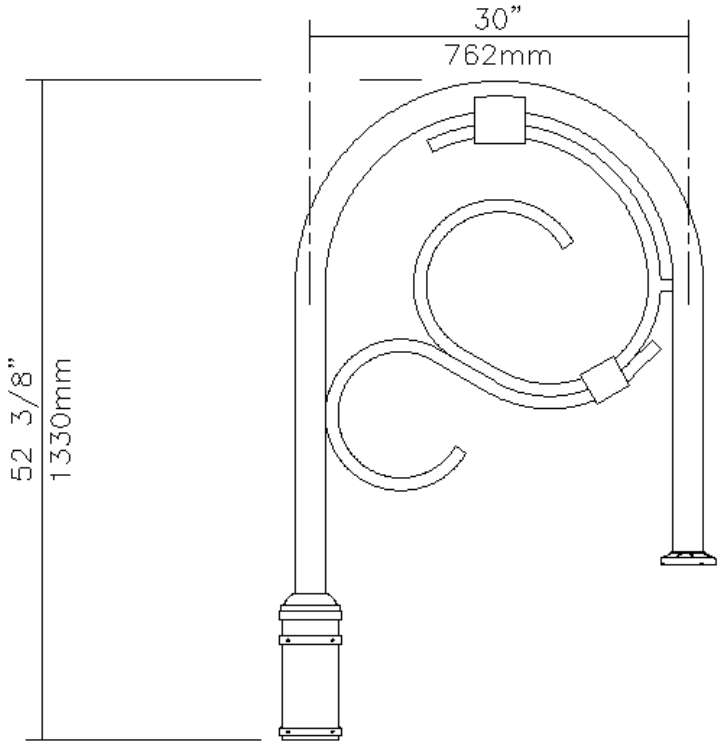

Qty **1** Bracket **NM-1A-GN8TX**

Description of Components:

Arm: Shall be made from bent 6061-T6 aluminum tubing, 2 3/8" (60mm) outside diameter, welded.

Decorative Element: Made of cast 356 aluminum, welded.

Adaptor: Made of cast 356 aluminum. **Slip-fits on a 4" (102mm) outside diameter x 9" (229mm) long tenon.** Mechanically fastened by two sets of four set-screws at 90 degrees around the bracket.

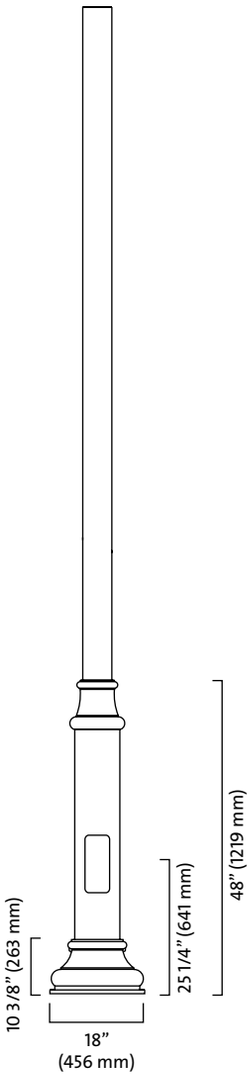

Base details

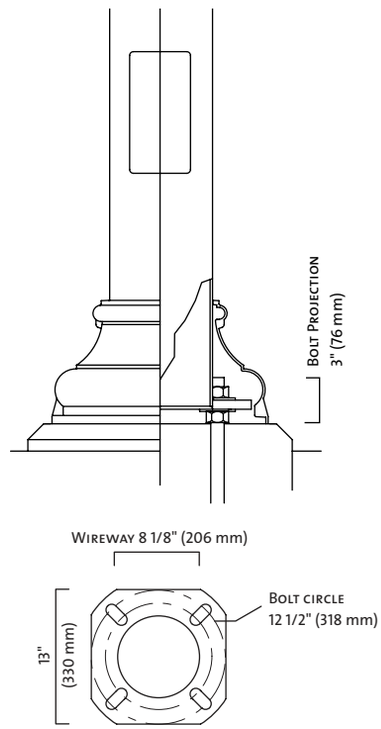

Comes with 4 anchor bolts,
8 nuts and 8 washers.
B.C. from: 11" to 13" (279 to 330 mm)

Specifications:

Pole: made from a one-piece, seamless 5 9/16" round (141 mm) high-tensile carbon steel shaft sealed by a rolled and flattened vertical weld seam and welded over and in an 8 5/8" round (219 mm) high-tensile carbon-steel pole base.
The assembly is welded to both the top and bottom of a steel anchor plate.
A 4 1/2" by 10" (114 by 254 mm) maintenance opening is complete with cover and copper ground lug.
Joint cover: made from two pieces of cast aluminum mechanically fastened to the junction with stainless steel hardware.
Base cover: decorative base cover made from cast-aluminum pieces mechanically assembled together with stainless steel hardware around base of the pole.
Finish: See page 142 for Finish details.
Options:

DE:	Pole buried 5' (1524 mm) in the ground (see page 133)
LS:	Provision for loudspeaker outlet (see page 132)
PH7:	Button-type photoelectric cell (specify operating voltage)
PH8:	Quarter-turn type photoelectric cell (specify operating voltage)
DR:	Duplex receptacle (120V line voltage only)
GFI:	DR with common ground fault interrupter (120V line voltage only)
BA:	Banner arm (see page 136)
PS:	Plant support (see page 137)
MPL:	Mid-pole luminaire

Note: The recommended method for calculating EPA (Effective Projected Area) is in accordance with AASHTO 2001 standards: for three seconds, the pole is tested in wind gusts equivalent to the strongest winds on record over the past 50 years, and with a 50 pound load (22.7 kg) placed at 1 foot (305 mm) above its center.

CATALOG NUMBER	NOMINAL HEIGHT		TENON SECTION		WALL THICKNESS		WEIGHT		EPA RATING 90 MPH	110 MPH	120 MPH	150 MPH	ANCHOR BOLTS	
	ft	m	in	mm	in	mm	lbs	kg	sq.ft	sq.ft	sq.ft	sq.ft	in	mm
RSS61V-18	18	5.49	5 9/16	141	0.250	6.4	258	117	30	30	30	21.2	1-36	25-914
RSS61V-20	20	6.10	5 9/16	141	0.250	6.4	287	130	30	30	27.43	17.66	1-36	25-914
RSS61V-22	22	6.71	5 9/16	141	0.250	6.4	315	143	30	27.47	23.19	14.88	1-36	25-914
RSS61V-24	24	7.32	5 9/16	141	0.250	6.4	344	156	30	23.4	19.73	12.62	1-36	25-914
RSS61V-26	26	7.93	5 9/16	141	0.250	6.4	372	156	29.46	20.04	16.88	10.73	1-36	25-914
RSS61V-28	28	8.54	5 9/16	141	0.250	6.4	400	182	25.36	17.19	14.44	9.13	1-36	25-914

Note: Philips Lumec reserves the right to modify the above details to reflect changes in the cost of materials and/or production and/or design without prior notice.

PHILIPS LUMEC

Miscellaneous

Description of Components:

Wiring: Gauge (#14) TEW/AWM 1015 or 1230 wires, 6" (152mm) minimum exceeding the bracket.

Hardware: All exposed screws shall be stainless steel with Ceramic primer-seal basecoat to reduce seizing of the parts. All seals and sealing devices are made and/or lined with EPDM and/or silicone.

Finish: Color to be **dark forest green textured (GN8TX)** and in accordance with the AAMA 2603 standard. Application of a polyester power coat paint (4 mils/100 microns) with ± 1 mils/24 microns of tolerance. The Thermosetting resins provides a discoloration resistant finish in accordance with the ASTM D 2244 standard, as well as luster retention in keeping with the ASTM D 523 standard and humidity proof in accordance with the ASTM-D2247 standard.

The surface treatment achieves a minimum of 2000 hours for salt spray resistant finish in accordance with the tests performed and the ASTM-B117 standard.

Note: ***IMPORTANT: All missing details must be clearly specified on the return of these approval drawings. Thank you for your cooperation.***

VOLTAGE:_____

Pole Information: This bracket is **available for a 4"(102mm), 5"(127mm) or 5 9/16" (141mm) Outside Diameter** pole or tenon.
Please specify **diameter required:** _____
.

LED products manufacturing standard: The electronic components sensitive to electrostatic discharge (ESD) such as light emitting diodes (LEDs) are assembled in compliance with IEC61340-5-1 and ANSI/ESD S20.20 standards so as to eliminate ESD events that could decrease the useful life of the product.

Quality Control: The manufacturer must provide a written confirmation of its ISO 9001-2008 and ISO 14001-2004 International Quality Standards Certification.

Web site information details: Click on any specific information details you need:

Paint finish / Warranties / Installation pictures / ISO 9001-2008 Certification / ISO 14001-2004 Certification

Lamp technical information for DMS50 DMS55

LED = Philips Lumileds Rebel ES, CRI = 70, CCT = 4000K (+/- 350K)

System (LED + driver) rated life = 100,000 hrs [1]

Lamp	Typical delivered lumens [2]		Typical lamp wattage (W)	Typical system wattage [3] (W)	Typical current @ 120 V (A)	Typical current @ 240 V (A)	Typical current @ 277 V (A)	LED current (mA)	HPS equivalent [4]	Luminaire Efficacy Rating (Lm/W)
	Flat lens	Sag lens								
70W64LED4K-ES	6470	6680	70	86	0.72	0.36	0.31	350	100 W	78
110W64LED4K-ES	9170	9460	110	135	1.13	0.56	0.49	530	200 W	70
90W80LED4K-ES	8200	8450	90	95	0.79	0.40	0.34	350	150 W	89
135W80LED4K-ES	11600	12000	135	138	1.15	0.58	0.50	530	250 W	87

[1] L70 = 100,000 hrs (at ambient temperature= 25°C and forward current = 700 mA)
[2] May vary depending on the optical distribution used
[3] System wattage includes the lamp and the LED driver.
[4] Compared to Domus (equivalence should always be confirmed by a photometric layout)

Photometric tests are done at 25°C ambient (as requested by LM-79). If our product is used at a different ambient temperature (nightime average), you can multiply the lumens by the percentage below.

Ambient (°C)	-20	-10	0	5	10	15	20	25
% Flux	105.8	105.1	104.2	103.8	102.8	101.9	101	100

As 4000K is our standard , photometric tests are only done with this CCT. If you want to use another CCT (6000K or 3000K) you can multiply the lumens by the percentage below.

CCT (K)	6000	4000	3000
% Flux	100	100	59.28

Life expectancy vs ambient temperature (@ 700 mA)

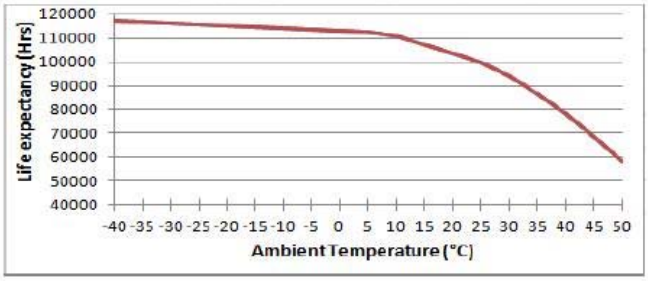

Note : Due to rapid and continuous advances in LED technology, LED luminaire data is subject to change without notice and at the discretion of Philips.

Georgia Department of Transportation
Technical Provisions

I-285 Ramps at CR 209/ Riverside Drive Project

P.I. No. 0010925

Attachment 11-2

Specification for Roundabout Lighting

Catalogue

LEDGINE

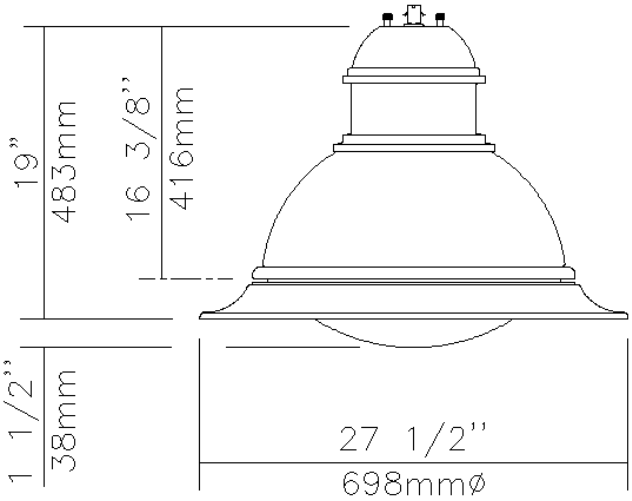

EPA: 1.42 sq ft / weight: 42 lb (19.09 kg)
Note: 3D image may not represent color or option selected.
Logos above include link, click to access.

Qty **1** Luminaire **DMS50-70W64LED4K-ES-LE3S-120-GN8TX**

Description of Components:

Hood: A die cast A360.1 aluminum dome complete with a cast-in technical ring with latch and hinge. The mechanism shall offer toolfree access to the inside of the luminaire. An embedded memory-retentive gasket shall ensure weatherproofing.

Housing: In a round shape, this housing is made of cast 356 aluminum, c/w a watertight grommet, mechanically assembled to the bracket with four bolts 3/8-16 UNC. This suspension system permits for a full rotation of the luminaire in 90 degree increments.

Light Engine: LEDgine composed of 4 main components: **LED lamp / Optical System / Heat Sink / Driver**
Electrical components are RoHS compliant.

Lens: Made of soda-lime clear tempered glass curved lens, mechanically assembled and sealed onto the lower part of the heat sink.

Lamp: *(Included)*, Lamp type ES, 120 lumens/watt. Composed of 64 high-performance white LEDs, 70w lamp wattage. Color temperature of 4000 Kelvin nominal, 70 CRI. Operating lifespan based on LM80 results after which 50% still emits over 70% (L70) of its original lumen output. Use of a metal core board insures greater heat transfer and longer lifespan of the light engine. The LED circuit board is included with a connector, (no connection wire required for ease of replacement).

Optical System: (LE3S), I.E.S type III (asymmetrical). Composed of high-performance acrylic refractors lenses to achieve desired distribution optimized to get maximum spacing, target lumen's and a perfect lighting uniformity. System is rated IP66. Performance shall be tested per LM63 and LM79 and TM15 (IESNA) certifying its photometric performance.

Heat Sink: Heat Sink: Made of die cast A360 aluminum optimising the LEDs efficiency and life, complete with a cast in skirt

PHILIPS LUMEC
640, Curé-Boivin
Boisbriand (Québec)
Canada, J7G 2A7

and technical ring. Product does not use any cooling device with moving parts (only passive cooling device)

Driver: High power factor of 95%. Electronic driver, operating range 50-60 Hz. **Auto-adjusting to a voltage between 120 and 277 volt AC rated for both application line to line or line to neutral, Class I**, THD of 20% max. Maximum ambient operating temperature from -40F(-40C) to 130F(55C) degrees. Certified in compliance to cULus requirement. Weather tightness rating IP66. Assembled on a unitized removable tray with Tyco quick disconnect plug resisting to 221F(105C) degrees.

The current supplying the LEDs will be reduced by the driver if the internal temperature exceeds 176F(80C), as a protection to the LEDs and the electrical components. Output is protected from short circuits, voltage overload and current overload. Automatic recovery after correction.

Surge Protector: LED Driver 3 poles 10KV surge Protectors that protect Line-Ground, Line-Neutral, and Neutral-Ground in accordance with IEEE / ANSI C62.41.2 guidelines.

PHILIPS
LUMEC
640, Curé-Boivin
Boisbriand (Québec)
Canada, J7G 2A7

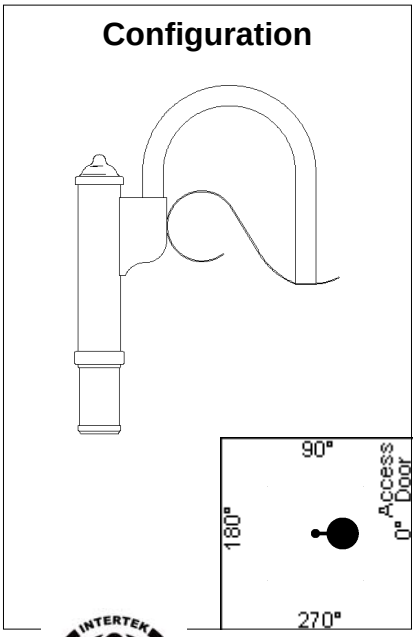

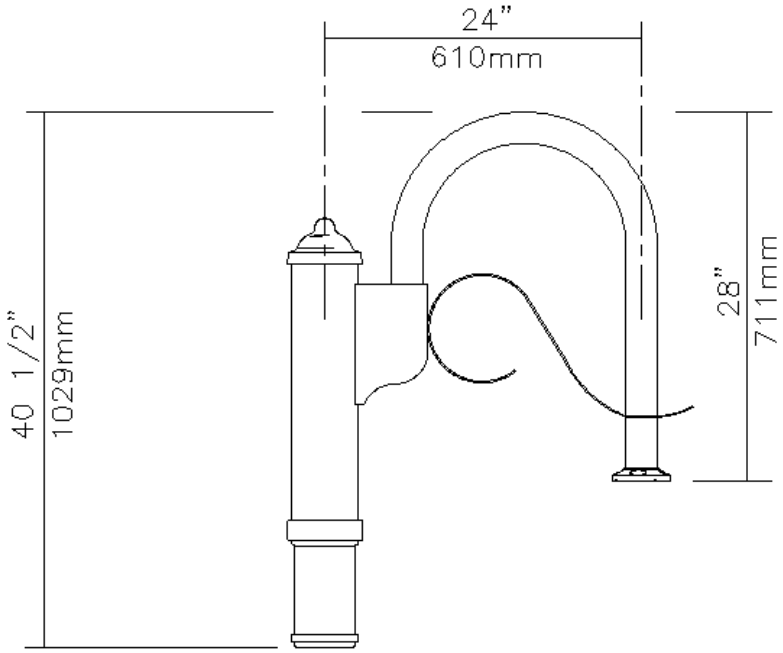

Qty **1** Bracket **LM-1A-GN8TX**

Description of Components:

Arm: Shall be made from bent 6061-T6 aluminum tubing, 2 3/8" (60mm) outside diameter, welded.

Decorative Element: Scroll made of bent aluminium, welded to the arm.

Central Adaptor: Made of aluminum 6061-T6, 5" (127mm) outside diameter. Complete with a cast 356 aluminum fitter that **slip-fits 9" (229mm) over a 4" (102mm) outside diameter pole tenon.** Mechanically assembled using two sets of four set screws at 90 degrees around the bracket.

PHILIPS LUMEC
640, Curé-Boivin
Boisbriand (Québec)
Canada, J7G 2A7

Base & Bolts Information

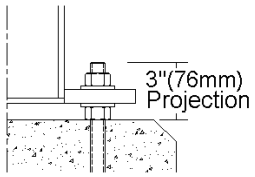

Comes with 4 steel anchor bolts, 3/4" X 17" + 3", 8 nuts and 8 washers. Important: Do not obstruct space between anchor plate and concrete base.

Anchor Plate

-B.C.:
12 1/2" (318mm)

- Material:
Cast Aluminum

- NOTE:
Bolt Circle Allowed:
11" to 13"
279mm to 330mm

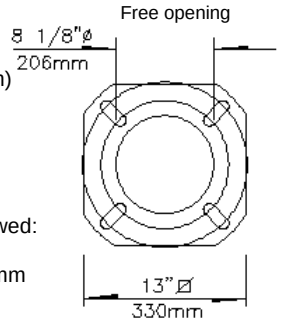

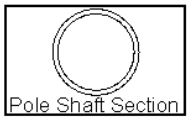

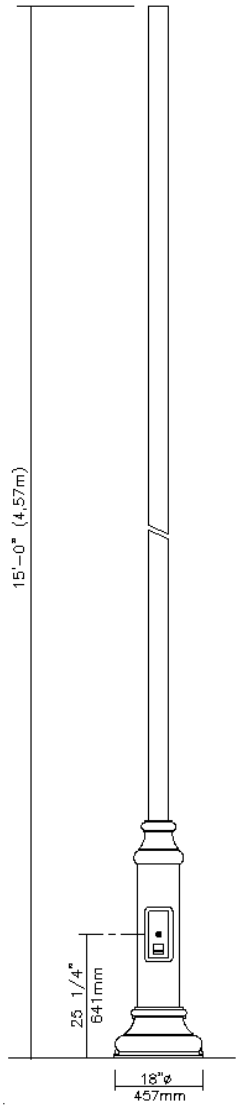

Qty **1** Pole **RA61U-15-GN8TX**

Description of Components:

Pole Shaft: Shall be made from a 4" (102mm) round extruded 6061-T6 aluminum tubing, having a 0.226" (5.7mm) wall thickness, welded to the pole base.

Joint Cover: Two-piece round joint cover made from cast 356 aluminum, mechanically fastened with stainless steel screws.

Pole Base: Shall be made from a 8 5/8" (219mm) round extruded 6061-T6 aluminum tubing base having a 0.148" (4.8mm) wall thickness, welded to both the bottom and top of the anchor plate.

Maintenance Opening: The pole shall have a 4 1/2" x 10" (114mm x 254mm) maintenance opening centered 25 1/4" (641mm) from the bottom of the anchor plate, complete with a weatherproof embossed aluminum cover and a copper ground lug.

Base Cover: Two piece round base cover made from cast 356 aluminum, mechanically fastened with stainless steel screws.

Note: A tenon will be provided when the luminaire or bracket does not fit directly on pole shaft. Tenon not shown on the drawing.

IMPORTANT: Philips Lumec strongly recommends the installation of the complete lighting assembly with all of its accessories upon the anchoring of the pole. This will ensure that the structural integrity of the product is maintained throughout its lifetime.

PHILIPS LUMEC
640, Curé-Boivin
Boisbriand (Québec)
Canada, J7G 2A7

Miscellaneous

Description of Components:

Wiring: Gauge (#14) TEW/AWM 1015 or 1230 wires, 6" (152mm) minimum exceeding top of the bracket.

Hardware: All exposed screws shall be stainless steel with Ceramic primer-seal basecoat to reduce seizing of the parts. All seals and sealing devices are made and/or lined with EPDM and/or silicone.

Finish: Color to be **dark forest green textured (GN8TX)**. Application of a polyester powder coat paint. (4 mils/100 microns). The chemical composition provides a highly durable UV and salt spray resistant finish in accordance to the ASTM-B117-73 standard and humidity proof in accordance to the ASTM-D2247-68 standard.

Quality Control: The manufacturer must provide a written confirmation of its ISO 9001-2008 and ISO 14001-2004 International Quality Standards Certification.

Mechanical resistance: In order to ensure the mechanical resistance of the poles, the projected area should be calculated according to AASHTO 2001.

Web site information details: Click on any specific information details you need:

Paint finish / Warranties / Installation pictures / ISO 9001-2008 Certification / ISO 14001-2004 Certification

PHILIPS LUMEC
640, Curé-Boivin
Boisbriand (Québec)
Canada, J7G 2A7

Lamp Technical Information (LEDgine)

Lamps #	Rated life hrs. [1]	LED Manufacturer	CRI	Color Temperature [2]	Initial Lumens	Wattage		Max System AC current: 120v	LED mA
						Lamp	System [3]		
35W32LED4KES	100,000	Philips Lumileds Rebel ES	70	4000K	3872	35W	40	0.36A	350mA
42W32LED4KES	100,000		70	4000K	4576	42W	45	0.42A	400mA
55W32LED4KES	100,000		70	4000K	5632	55W	60	0.54A	530mA
55W48LED4KES	100,000		70	4000K	5808	55W	60	0.54A	350mA
65W48LED4KES	100,000		70	4000K	6864	65W	72	0.63A	400mA
80W48LED4KES	100,000		70	4000K	8448	80W	88	0.82A	530mA
70W64LED4KES	100,000		70	4000K	7744	70W	77	0.72A	350mA
85W64LED4KES	100,000		70	4000K	9152	80W	94	0.84A	400mA
110W64LED4KES	100,000		70	4000K	11264	110W	120	1.09A	530mA
90W80LED4KES	100,000		70	4000K	9680	90W	100	0.90A	350mA
105W80LED4KES	100,000		70	4000K	11440	110W	115	1.05A	400mA
135W80LED4KES	100,000		70	4000K	14080	135W	150	1.36A	530mA

[1] Rated life represents the time it takes for the LED system to reach 70% of initial lumen output (as described in LM-80)

[2] On average.

[3] System wattage includes the lamp and the LED driver.

Ambient (°C)	-55	-35	-15	5	25	45	65
% Flux	104.8	104.5	103.5	101.8	98	91.5	83

Photometric tests are done at 25°C ambient (as requested by LM-79)

If our product is used at a different ambient temperature, you can multiply the lumens by the percentage above

CCT (K)	6000	4000	3000
% Flux	100.00	100.00	68.18

As 4000K is our standard , photometric tests are only done with this CCT

Light output of 6000K is the same as 4000K (With Lumileds Rebel)

If you want to use another CCT (6000K or 3000K) you can multiply the lumens by the percentage above

Life expectancy vs ambient temperature (at 530 mA)

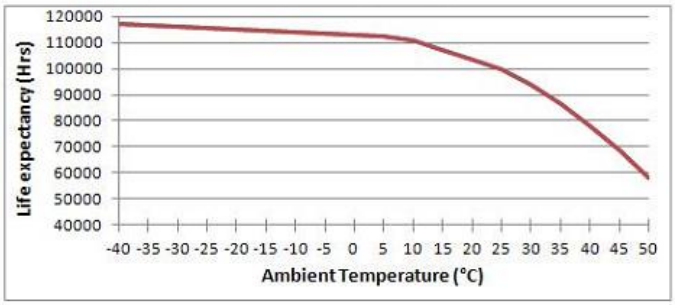

Note : Due to rapid and continuous advances in LED technology, LED luminaire data is subject to change without notice and at the discretion of Philips.

PHILIPS LUMEC
640, Curé-Boivin
Boisbriand (Québec)
Canada, J7G 2A7

Georgia Department of Transportation
Technical Provisions

I-285 Ramps at CR 209/ Riverside Drive Project

P.I. No. 0010925

Attachment 13-1

Special Provision 449 – Silicon Joint

Date: August 5, 2005
Revised: June 14, 2010

DEPARTMENT OF TRANSPORTATION
STATE OF GEORGIA

SPECIAL PROVISION

PROJECT: I-285 Ramps at CR 209/ Riverside Drive Project

COUNTY: Fulton County

P.I.: 0010925

SECTION 449 – Bridge Deck Joint Seals

Add the following Subsections to Section 449:

449.1 General Description

- A preformed silicone joint seal, or

449.2 Materials

J. Performed Silicone Joint Seal

- The preformed silicone joint seal shall as a minimum:
- Be held in place by a non-sag, high modulus silicone adhesive.
- Be compatible with epoxy and elastomeric concrete header material and steel headers (if required).
- Withstand the effects of vertical and lateral movements, skew movements and rotational movement without adhesive or cohesive failure.
- The depth of the joint shall be recessed below the riding surface throughout the normal limits of joint movement.
- Resistant to ultraviolet rays
- Resistant to abrasion, oxidation, oils, gasoline, salt, and other materials that may be spilled on or applied to the surface.

Ensure the joint meets the following physical properties:

Test	Requirements	Test Method
Hardness Type A durometer	53 ± 5	ASTM D 2240
Tensile Strength (min)	550 psi (3.8 Mpa)	ASTM D 412
Elongation at break (min)	350%	ASTM D 412
Tear Strength (min)	80 lb/in (92 kg/cm)	ASTM D 624
Compression set (max)	30% at 350o F	ASTM D 395
Operating temp range (min)	-60° F to 450° F (51° C to 232° C)	

The adhesive shall also have the following properties:

Test	Requirements	Test Method
Sag/flow (max)	3/16" (4.8 mm)	ASTM C 639
Hardness	23 ± 3	ASTM C 661
Tack free time (max)	30 minutes	ASTM C 679
Skin over time (tooling Time) (max)	5 minutes	AT 75° F/50% RH
Cure through to ¼" thickness (max)	16 hours	AT 75° F/50% RH
Resistance to UV	No Degradation	ASTM C 793
Peel Adhesion to substrates (min)	50 lb/in (58kg/cm)	ASTM C 794

449.3.03 Preparation

A. Surface Preparation

2. Preparation for Joint Seal

Remove: "Saw-cutting of the concrete deck may be necessary to provide an acceptable attachment surface for the joint seal".

449.3.05 Construction

H. Performed Silicone Joint Seal

1. After the epoxy or elastomeric concrete had developed enough strength to be traffic ready, remove the temporary joint filler (when called for) and thoroughly clean the joint faces of all joint filler.
2. Lightly sandblast the joint to remove all residue. Prior to installation ensure surfaces are completely dry and all recommendations of the manufacture have been completed.
3. Clean the seal prior to installation by wiping it down with a cloth saturated with De-Natural alcohol.
4. Apply a 3/8” thick bead of adhesive along both sides of the joint at the depth recommended by the manufacture.
5. Position the joint seal to the proper depth as recommended by the manufacture.
6. Apply a bead of adhesive along the top side of the joint on each side as recommended by the manufacture.
7. Tool the adhesive twice to insure complete contact with the vertical edge.

449.5 Payment

Payment will be made under:

Item No. 449	Preformed Silicon Joint Seal, Bridge No - _____, Bent No - _____	Per Linear Foot (meter)

Georgia Department of Transportation
Technical Provisions

I-285 Ramps at CR 209/ Riverside Drive Project

P.I. No. 0010925

Attachment 13-2

Special Provision 519 – Polymer Overlay

Date: November 20, 2013

DEPARTMENT OF TRANSPORTATION
STATE OF GEORGIA
SPECIAL PROVISION
PROJECT: I-285 Ramps at CR 209/ Riverside Drive Project
COUNTY: Fulton County
P.I.: 0010925
Section 519 – Concrete Bridge Deck Overlay

Add the following:

Section 519—TWO-PART POLYMER BRIDGE DECK OVERLAY

519.1 General Description

This work includes preparation of the bridge deck and furnishing and placing of a two-part polymer bridge deck overlay at the location and thickness as indicated on the plans. This bridge deck overlay system consists of a minimum 3/8 inch (9.5mm) thick application to provide complete waterproofing as well as providing a non-skid surface that withstands continuous heavy traffic and extreme changes in weather conditions.

519.1.01 Definitions

A. Standard Specifications

General Provision 101 through 150.

Section 107 – Legal Regulations and Responsibility to the Public

Section 504—Twenty-Four Hour Accelerated Strength Concrete

Section 886—Epoxy Resin Adhesives

Section 934—Rapid Setting Patching Materials for Portland Cement Concrete

519.2 Materials

A. Submittals: Submit the bridge deck overlay materials to the Office of Materials and Research for approval. The Office of Materials and Research will grant approval based on laboratory test results and on the system's performance during a 2 year field evaluation.

B. Pre-treatment: Use pre-treatment only when recommended by the overlay manufacturer. Use pre-treatment consisting of a two-part hybrid polymer that is free of any fillers or volatile solvents and formulated to provide simple volumetric ratio of two components such as one to one or two to one by volume. Formulate the two-part hybrid polymer to provide a unique combination of extremely low viscosity and low surface tension coupled with an affinity for concrete and steel. Use two-part hybrid polymer pre-treatment having the following physical requirements when cured:

PHYSICAL PROPERTIES FOR CURED PRE-TREATMENT SYSTEM		
TEST	**REQUIREMENTS**	**TEST METHOD**
Compressive Strength	5,500 PSI (38MPa) min.	ASTM C 109

Tensile Strength	3,100 PSI (21MPa) min.	ASTM D 638
Tensile Elongation	30% min.	ASTM D 638
Water Adsorption	0.10% max.	ASTM D 570
Shore "D" Hardness	65 min.	ASTM D 2240
Pot Life	40-70 minutes	GDT-58
Adhesion to Concrete	100% failure in concrete	ACI-503-R (Pull Out Test)

C. Bridge Deck Overlay: Use a bridge deck overlay consisting of a two-part polymer that is free of any fillers or volatile solvents and formulated to provide simple volumetric mixing ratio of two components such as one to one or two to one by volume. Use a two-part polymer system formulated to provide flexibility in the system without any sacrifice of the hardness, chemical resistance or strength of the system. Do not use external or conventional plasticizers. Introduce flexibility by interaction of elastomers to chemically link in the process of curing so that the flexibility of the molecule is minimally affected during the low temperature conditions that are confronted in actual use. Use a two-part polymer overlay system having the following physical properties when cured:

PHYSICAL PROPERTIES FOR CURED TWO PART POLYMER OVERLAY SYSTEM		
TEST	**REQUIREMENTS**	**TEST METHOD**
Compressive Strength	7,000 PSI (48MPa) min.	ASTM C 109
Tensile Strength	2,500 PSI (17MPa) min.	ASTM D 638
Tensile Elongation	30% min.	ASTM D 638
Water Adsorption	0.20% max.	ASTM D 570
Shore "D" Hardness	60 min.	ASTM D 2240
Pot Life	15-40 minutes	GDT-58
Flexural Creep	0.0065" (0.17mm) in 7 days	California Method 419
Adhesion to Concrete	100% failure in concrete	ACI-503-R (Pull Out Test)

D. Aggregate: Use bauxite, crushed porphyry, aluminum oxide or other similarly hard durable aggregates as recommended by the manufacturer and approved by the Engineer. Use embedded exposed aggregate conforming to the following gradation.

FINE AGGREGATE GRADATION	
SIEVE SIZE	**% PASSING BY WEIGHT**
No. 4	100
No. 20	0 – 5
No. 200	0 –1.0

Broadcast coarse aggregate conforming to the following gradation over the first layer of polymer, immediately prior to broadcasting fine aggregate.

COARSE AGGREGATE GRADATION	
SIZE	**% PASSING BY WEIGHT**
5/8"	98 - 100
½"	55 – 60
3/8"	12 – 14
¼"	0 - 1

519.2.01 Delivery, Storage and Handling

Deliver all materials in their original containers, bearing the manufacturer's label, specifying date of manufacture, batch number, trade name brand, quantity and mixing ratio.

Store all materials to prevent damage from the elements and to insure the preservation of its quality and fitness for the work. Avoid contact with flame.

Inspect all stored materials, although accepted before storage, prior to their use in the work. Ensure that all stored materials meet the requirements of the Contract at the time of use.

Remove from the site of the work immediately, any material rejected because of failure to meet the required tests or rejected because of damage. Replace all removed material at no additional cost to the Department.

519.3 Construction Requirements

519.3.01 Preparation

A. Removal and Preparation of Repair Area

Sound all visual bridge deck defects of greater than 1” X 6” (25mm X 150mm) to determine the limits of the damaged areas. Strike the deck surface around the defect with a hammer, chain drag, or other similar tool to detect unsound concrete having a “flat” or “hollow” sound. Mark the limits of the defective areas on the deck by making a rectangular area 2 inches (50mm) beyond the outer limits of the unsound concrete area to serve as a guide for sawing. Mark spalled areas within less than 6 inches (150mm) of each other as one spall area.

Saw the rectangular marked areas with near vertical faces not less than one inch (25mm) in depth. Exercise extreme care not to saw or damage the reinforcing steel. Remove all unsound material within the sawed areas. Remove concrete to a minimum depth of $^{1}/_{2}$ inch (13mm) below the top mat of reinforcing steel by power chipping or hand tools. Do not use pneumatic hammers heavier than a 15 lb. class (nominal). Do not operate pneumatic hammers and chipping tools at an angle exceeding 60 degrees relative to the surface of the deck slab. Such tools may be started in the vertical position but must be immediately tilted to a 60 degree operation angle. Clean all exposed reinforcing steel of all rust, corrosion products, oil, dirt, concrete fragments, loose scale and any other coating of any character that would destroy or inhibit the bond with the patching material. Exercise utmost care not to damage or fracture the sound concrete substrate left on the bottom of the spall repair area. Do not use sharp pointed bits.

Hold “over-cutting” of the bridge deck beyond marked areas to the minimum amount possible. Thoroughly clean all “over-cutting” of “saw slurry” and other contaminants. Then repair by filling full-depth with an approved Type II epoxy adhesive as specified in Section 886. Make such repairs as soon as possible.

Just prior to placing the patching material, thoroughly clean the surfaces within the repair areas by abrasive blasting and air blasting to remove any oil, dust, dirt, slurry from saw operation, and other contaminants. Remove abrasives from the blasting operation from the bridge deck. During blasting, protect traffic in adjacent lanes.

B. Placement of Patching Material

The Contractor shall use Repair Method No. 1 or Method No. 2 as described below. For both repair methods, ensure the surface within the repair areas is dry and thoroughly cleaned of all contaminants immediately before placement. Use air compressors equipped with suitable traps capable of removing all surplus water and oil in the compressed air for cleaning repair areas. Do not use contaminated air. Use air compressors capable of delivering compressed air at a continuous pressure of 90 psi (620kPa).

Ensure the finished surface meets a surface tolerance of $^{1}/_{16}$ inch (1.6mm). Utilize such approved measures as necessary to keep the deck surface adjacent to the patching operation reasonably clean of excess grout and other materials at all times. Unless otherwise specified, complete all patching operations and open all lanes to traffic before sunset each day.

1. **Repair Method No. 1 (24 Hour Accelerated Strength Concrete)**

   After the repair area preparation is complete, completely coat all concrete surfaces within the repair area with a film of Type II epoxy at a thickness of 10 to 20 mils (0.25 to 0.50mm).

   Use concrete meeting the requirements of Section 504. Mix the concrete on site. Use a mix design and mixing method approved by the Laboratory. Deposit concrete in the repair area while the epoxy is still tacky and vibrate sufficiently to form a dense, homogeneous mass of concrete, completely filling the area of the patch. Screed the concrete to the proper grade and allow to remain undisturbed until the water sheen disappears from the surface. Then cover the concrete with wet burlap or membrane curing compound. Continue curing for a minimum of 3 hours. The Engineer may require a longer curing time to ensure sufficient strength development of the concrete prior to opening to traffic.

2. **Repair Method No. 2 (Rapid Setting Patching Material)**

   Follow the above requirements for Repair Method No. 1. Additionally, prepare the surfaces in the repair areas in accordance with the manufacturer’s written recommendations. Handle, mix, place, consolidate, screed, and cure the

patching material in accordance with the manufacturer's written instructions as approved by the Laboratory. Continue curing for at least one hour and until the section is opened to traffic.

519.3.02 Construction

A. Surface Preparation: Clean the bridge deck by shotblasting to remove any oil, dirt, rubber or any other potentially detrimental material such as curing compound and laitance which may prevent proper bonding and curing of the material.

The Contractor is directed to Section 107 of the Standard Specifications giving the Contractor responsibility for the work site, and requiring conformance to all federal, state, and local laws relating to pollution control and worker protection. In particular, ensure that the Contractor is familiar with and in full compliance with the provisions of the laws concerning the management of waste and worker protection.

Do not allow construction traffic on any portion of the deck that has been shotblasted or on the overlay without specific approval of the Engineer. Overlay the deck surface within 24 hours of the surface preparation operation.

Ensure all surfaces to be overlaid are dry at the time of application. Immediately before applying the overlay system, clean all prepared surfaces with compressed air (or vacuum) to remove dust and debris. Use air compressors equipped with a filter to prevent oil in the air supply. Do not apply the overlay system when rain is forecast to occur within 24 hours of application. Do not apply the overlay system unless the minimum ambient temperature is 50° and rising.

If, in the opinion of the Engineer, the surface has become soiled or contaminated prior to the application of the overlay, re-clean the surface to the satisfaction of the Engineer at no additional cost to the Department.

B. Field Test: Prior to commencing the overlay operation, place a test area of overlay on the bridge deck. Prepare the area for the test overlay as described above. Ensure the test is large enough so the cleaning equipment and methods to be employed in the full-scale operation can be used for the field test. Ensure the degree of cleaning used on the test area is the minimum used on the remainder of the structure. Use the application of the overlay system to the test area to establish proper procedures and techniques for applying the overlay to the full structure.

After the test area has cured for 72 hours, check adhesion in accordance with ACI 503R-1980. Test a minimum of three sample areas. Ensure no adhesion test has an adhesive strength less than 250 psi (1725kPa) and the minimum average value for the 3 tests is greater than 300 psi (2070kPa).

If the test of a sample area fails to meet the above requirements due to a cohesive failure of the concrete substrate, the adhesive strength of the sample area will be considered acceptable. Successful completion of the adhesive strength tests will be required before the full-scale overlay operation is to begin.

C. Application: Provide suitable coverings, such as heavy duty drop cloths, to protect all exposed areas not to be overlaid, such as curbs, railings, parapets, deck drains, locations of expansion joints that are to receive expansion joint membranes, etc. Clean or repair any damage or defacement resulting from the application, at the Contractor's expense, to the satisfaction of the Engineer.

Ensure the application of the overlay system is done by the supplier, or by a factory trained or licensed applicator, with written approval from the manufacturer of the overlay system.

Ensure each component of the two-part polymer is metered, mixed together, and distributed onto the deck by machine. Use a dispensing machine capable of ratio check verification at the pump outlets as well as cycle counting to monitor output. Ensure the in line mixing is motionless so as not to overly shear the material. Ensure the machine makes maximum use of the working time of the polymer by mixing it immediately prior to dispensing onto the deck.

Provide the number of layers and the application rates of the materials in the various layers as recommended by the manufacturer in order to achieve a minimum $^{3}/_{8}$ inch (9.5mm) and maximum ½ inch (13mm) overlay thickness when measured from the top of the concrete substrate to the top of the polymer (not the peaks of the aggregate). Ensure the application of the overlay system is as follows:

1. APPLICATION OF POLYMER: After mixing of the components, evenly distribute the polymer on the clean, dry deck surface at the rate recommended by the manufacturer.

2. APPLICATION OF AGGREGATE: After application of each layer of polymer, allow a minimum lapse period as required by the manufacturer's instructions before broadcasting the aggregate. Ensure the method and rate of aggregate application is in accordance with the manufacturer's recommendations.
3. CONSOLIDATION: If required by the manufacturer, use a hand operated roller as approved by the Engineer and the manufacturer within 10 minutes of the aggregate application to evenly consolidate the aggregate into the polymer.
4. REMOVAL OF EXCESS AGGREGATE: After initial cure, remove excess aggregate by a power vacuum or other Engineer approved method prior to the application of subsequent layers of polymer.
5. APPLICATION OF ADDITIONAL LAYERS: Additional layers may be applied immediately after the initial set of the preceding layer (as determined by the Manufacturer and Engineer) and removal of all excess aggregate. The maximum time allowed between each layer shall be at the discretion of the Engineer and the Manufacturer and may vary depending on the temperature and circumstances of the project. Ensure joints are staggered and overlapped between successive layers so that no ridges will appear.
6. TRAFFIC CONSIDERATIONS: Traffic may be allowed on the final layer after the polymer has reached its final cure (as determined by the Manufacturer) and after removal of all excess, loose aggregate.
7. OVERLAY SURFACE: Ensure the finished surface consists of a uniform coat of imbedded exposed aggregate.

519.3.03 Quality Acceptance

A. Thickness Verification

Ensure the overlay is at least $^{3}/_{8}$" (9.5mm) thick as measured from the concrete substrate to the top of the polymer at three random locations for every 1000 yd^2 (830 m^2) of surface area. Recoat thin areas as described above and re-verify thickness at no additional cost to the Department. This verification may consist of cores, holes, etc., but in all cases repair any areas tested to destruction before final acceptance.

In thin areas that have been recoated to obtain the required minimum thickness, the Engineer may require additional adhesion strength tests in accordance with ACI 503R-29 to verify the Contractor's procedure for recoating existing overlay.

519.3.04 Contractor Warranty and Maintenance

The polymer manufacturer and the Contractor, by acceptance of the work described in this Specification, shall jointly agree to guarantee the wearing surface against all defects incurred during normal traffic use for a period of ten years. Submit this agreement in writing to the Engineer signed by both the polymer manufacturer and the Contractor. Commence the ten year period on the date of acceptance of the work. The guarantee shall cover all labor and materials required by the Department to satisfactorily repair and replace the wearing surface.

519.4 Measurement

519.4.01 Surface Preparation:

Measure the area of the deck acceptably repaired and blast cleaned prior to installation of the overlay in square yards (meters) computed from surface measurements taken to the nearest 0.1 foot (30mm). Do not measure the blast cleaning of any longitudinal or transverse construction joints or vertical surfaces for payment.

519.4.02 Polymer Overlay:

Measure the area of the deck acceptably overlaid with polymer and broadcast spread crushed aggregate in square yards (meters) computed from surface measurements taken to the nearest 0.1 foot (30mm).

519.5 Payment

519.5.01 Surface Preparation:

Surface preparation is paid for by the square yard (meter) of the deck acceptably repaired and blast cleaned prior to installation of the overlay. Payment includes all expenses associated with removal of existing concrete, repair and blast cleaning operations.

519.5.02 Polymer Overlay:

Polymer overlay is paid for by the square yard (meter) of the deck overlaid, complete in place and accepted, provided, however, that the specified minimum overlay thickness requirement is met. The individual layers necessary to attain the specified thickness will not be paid for individually. Payment includes all labor and material cost, procurement, handling, hauling and processing, coring for thickness verification, guarantee, and includes all equipment, tools, labor, and incidentals necessary to complete the work.

Payment will be made under:

Item No. 519	Surface Preparation	Per square yard (meter)
Item No. 519	Polymer Overlay	Per square yard (meter)

Item No. 519-0515 Surface Preparation per Square Yard (Meter)

Item No. 519-0530 Polymer Overlay per Square Yard (Meter)

Georgia Department of Transportation
Technical Provisions

I-285 Ramps at CR 209/ Riverside Drive Project

P.I. No. 0010925

Attachment 13-3

Special Provision 521 – Patching Concrete Bridge Structures

Date: July 1, 2013

DEPARTMENT OF TRANSPORTATION
STATE OF GEORGIA

SPECIAL PROVISION

PROJECT: I-285 Ramps at CR 209/ Riverside Drive Project

COUNTY: Fulton County

P.I.: 0010925

SECTION 521 – PATCHING CONCRETE BRIDGE STRUCTURES

521.1 General Description

This work includes patching of substructure or superstructure concrete bridge components by removing the broken, damaged, or disintegrated concrete, cleaning existing reinforcement, adding supplemental reinforcement when required, and patching with approved conventional or accelerated Portland cement concrete or rapid setting patching materials according to this Specification and as shown on the Plans.

521.1.01 Definitions

General Provisions 101 through 150.

"Sound" – the act of striking a concrete surface with a chipping hammer or similar tools to detect unsound concrete.

521.1.02 Related References

A. Standard Specifications

Section 500—Concrete Structures

Section 504—Twenty-Four Hour Accelerated Strength Concrete

Section 511—Reinforcement Steel

Section 853—Reinforcement and Tensioning Steel

Section 886—Epoxy Resin Adhesives

Section 934—Rapid Setting Patching Materials for Portland Cement Concrete

B. Referenced Documents

QPL 10

QPL 27

521.1.03 Submittals

General Provisions 101 through 150.

521.2 Materials

Ensure that the materials used to repair and patch bridge components meet the following requirements:

A. Portland Cement Concrete Patching Materials

1. Conventional Portland Cement Concrete (Repair Method 1)

   a. Use Class "A" or Class "AA" concrete or as indicated on the Plans.

   b. Meets the requirements of Section 500 of the Specifications.

   c. Use concrete manufactured at plants that qualify as approved sources according to the Standard Operating Procedure for Ready Mix Concrete. See QPL 10 for a list of approved plants.

2. Twenty-Four Hour Accelerated Strength Concrete (Repair Method 2)

   a. Meets the requirements of Section 504 of the Specifications, except that the use of a portable concrete mixer is required.

B. Rapid Setting Patching Materials (Repair Method 3)

1. Use rapid setting patching materials meeting the requirements of Section 934. See QPL 27 for a list of approved patching materials. Patching materials not listed on QPL 27 will require testing and approval by the Office of Materials and Research before use.

2. When shown on the Plans, use Type III rapid setting patching material to patch vertical and overhead repair areas.

521.2.01 Delivery, Storage, and Handling

General Provisions 101 through 150.

521.3 Construction Requirements

521.3.01 Personnel

General Provisions 101 through 150.

521.3.02 Equipment

To clean the repair areas, use air compressors equipped with traps that can remove surplus water and oil in the compressed air. Ensure that the compressor can deliver compressed air at a continuous pressure of at least 90 psi (620 kPa).

The Engineer will check the compressed air daily for contamination. Do not use contaminated air.

521.3.03 Preparation

A. Limits of Repair

Repair all patches as shown on the Plans and as directed by the Engineer. Determine limits of patch repair as follows:

1. "Sound" concrete surface with visual defects to determine the limits of the damaged areas. Strike the surface with a chipping hammer or similar tools to detect unsound concrete. Concrete that is loose or exhibits a flat or hollow sound is considered unsound. Omit any defect for repair that is less than 1 in. by 6 in. by 0.5 in. (25 by 150 by 12 mm) deep.

2. Mark the limits of the defective areas on the concrete surface by making a rectangle 2 in. (50 mm) beyond the outer limits of the unsound concrete area as a guide for saw cuts.

3. Combine patched areas less than 6 in. (150 mm) from each other as one patch area.

4. Obtain approval from the Engineer on the limits of each repair prior to saw cutting.

B. Concrete Removal

1. Saw the rectangular marked areas a minimum of 1 in. (25 mm) deep or as shown on the plans. Exercise extreme care not to saw or damage the reinforcing steel.

2. Remove unsound material within the sawed area to a minimum depth of 2 inches for unreinforced concrete or 0.5 in. (12 mm) below the reinforcing steel or as shown on the Plans with power chipping or hand tools. Pneumatic hammers heavier than 15 lb. class nominal (30 lb. maximum) are not permitted. Exercise extreme care not to saw or damage the reinforcing steel.

3. Operate pneumatic hammers and chipping tools at an angle not to exceed 60 degrees relative to the surface of the concrete. After starting the tool in the vertical position, immediately tilt the tool to a 60 degree operating angle.

4. Do not damage or fracture the sound concrete substrate to be left on the bottom of the patch area. Do not use sharp pointed bits.

C. Surface Preparation

1. Clean all exposed reinforcing steel of all rust and corrosive products including oil, dirt, concrete fragments, loose scale and any other coating of any character that would destroy or inhibit the bond with the patching material.

2. Immediately before placing the patching material, thoroughly clean the surfaces within the repair areas by sandblasting and air blasting to remove oil, dust, dirt, slurry from saw operation, and other contaminants.

3. Place formwork as required to complete patch repair. Provide access in formwork for placement of patch material.

4. Ensure that the finished surface meets a surface tolerance of 1/16 in. (1.5 mm).

5. Use approved measures as necessary to keep the adjacent concrete surfaces free of excess grout and other materials.

521.3.04 Fabrication

General Provisions 101 through 150.

521.3.05 Construction

A. Concrete Patching

Patch concrete safely and rapidly to minimize inconvenience to the traveling public.

1. Accomplish this work with other operations in progress within an area if possible.
2. Remove and replace completed patches that contain cracks, shrinkage, compression failures, or are damaged by construction or traffic before Final Acceptance at no cost to the Department.

B. Placing Patching Material

Only use Repair Method 1 with the class of concrete on bridge components designated on the Plans.

Use Repair Method 2 unless the Engineer gives written approval to use Repair Method 3. Use Repair Method 1 and 2 when the average daily temperature is 50 °F (10 °C) or above. Use of Repair Method 3, if approved, is limited to the manufacturer's written recommendations.

For the following repair methods, begin the placement when the surface within the repair area is dry and thoroughly free of contaminants.

1. Repair Method 1: Conventional Portland Cement Concrete

a. Completely coat the concrete surface areas within the repair area with a film of Type II epoxy adhesive as specified in Section 886 approximately 10 to 20 mils (0.25 to 0.50 mm) thick or according to the manufacturer's written recommendations.

b. Deposit the concrete in the repair area while the epoxy is still tacky. Vibrate it to form a dense, homogeneous mass of concrete that completely fills the patch area.

c. Screed the concrete to the proper grade and do not disturb it until the water sheen disappears from the surface.

d. Cover the concrete with wet burlap or membrane curing compound. Allow the curing to continue until the required minimum design compressive strength is achieved as designated by the class of concrete used or as shown on the Plans. Complete curing prior to transferring load to the repaired section.

2. Repair Method 2: Twenty-Four Hour Accelerated Strength Concrete

a. Prepare, remove and place as outlined in Subsections 521.3.03 and 521.3.05.B and 521.3.05.B.1.

b. Mix the concrete on site in a portable mixer of adequate capacity. Obtain approval for the mix design and mixing method from the Office of Materials and Research.

c. The material must meet a slump range of 1.0 to 3.0 in. (25 to 75 mm).

3. Rapid-Setting Patching Material

a. In addition to the requirements outlined in Subsection 521.3.03, prepare the surfaces in the repair areas according to the manufacturer's written recommendations.

b. Perform the patching material handling, mixing, placing, consolidating, finishing, and curing according to the manufacturer's written recommendations as approved by the Office of Materials and Research.

c. Continue curing until a minimum design compressive strength of 3,000 psi (20 MPa) or as shown on the Plans is achieved. Complete curing prior to transferring load to the repaired section.

C. Special Requirements

The following special requirements apply to this work:

1. During sandblasting, protect traffic in adjacent travel lanes.
2. After the sandblasting operations:

a. Thoroughly clean the area to be repaired with compressed air.

b. Remove sand from the sandblasting operation from adjacent concrete surfaces.

3. Do not "over-cut" concrete surfaces beyond marked areas whenever possible.
4. Remove saw slurry and other contaminates from the over-cutting.
5. Repair the over-cuts by filling full-depth with an approved low-viscosity epoxy compound using a Type II epoxy adhesive specified in Section 886. Make these repairs as soon as possible.

521.3.06 Quality Acceptance

General Provisions 101 through 150.

521.3.07 Contractor Warranty and Maintenance

General Provisions 101 through 150.

521.4 Measurement

The area measured for payment is the number of square feet (meters) of patching complete in place and accepted.

521.4.01 Limits

General Provisions 101 through 150.

521.5 Payment

The area measured as specified above will be paid for at the Contract Unit Price per square foot (meter). Payment is full compensation for equipment, tools, labor, incidentals to complete the work, including but not limited to:

- Removing existing patching material or the spalled, broken, or damaged concrete
- Cleaning the open area by sandblasting
- Furnishing, placing, finishing, and curing the patching material
- Supplemental reinforcement

Payment will be made under:

Item No. 521	Patching concrete bridge	Per square foot (meter)

521.5.01 Adjustments

General Provisions 101 through 150.

Georgia Department of Transportation

VOLUME 3

Programmatic Technical Provisions For

Design-Build Agreement

I-285 RAMPS AT CR 209/ RIVERSIDE DRIVE Project

PI No. 0010925

TABLE OF CONTENTS

1 GENERAL 1

2 PROJECT MANAGEMENT 1
2.1 Project Management Plan Requirements 1
2.1.1 Project Descriptions and Scope of Work 2
2.1.2 Project Organizational Chart, Roles, and Responsibilities 2
2.1.3 Project Phases 2
2.1.4 Design Quality Assurance 2
2.1.5 Construction Quality Assurance 3
2.1.6 Environmental Monitoring 4
2.1.7 Right of Way 4
2.1.8 Safety and Security 4
2.1.9 Traffic Management 6
2.1.10 Project Communications (Media and Public Information) 6
2.1.11 Closeout Plan 6
2.1.12 Appendices 6
2.1.13 Project Management Plan Checklist 6
2.2 Schedule Requirements 7
2.2.1 General Schedule Requirements 7
2.2.3 Project Baseline Schedule Requirements 8
2.2.4 Narrative Requirements 17
2.2.5 Project Schedule Update Requirements 19
2.2.6 Project Baseline Schedule Revisions 21
2.3 Quality Management Requirements 25
2.3.1 Document Management 25
2.3.2 Quality Management Plan Submittal Requirements 25
2.3.3 Quality Management Plan Requirements 25
2.3.4 Quality Management Plan Structure 26
2.3.5 Nonconformance Report (NCR) System 27
2.3.6 Quality Management Updates 30
2.3.7 Responsibility and Authority of DB Team Staff 30
2.3.8 Design Quality Management Plan 30
2.3.9 Record Drawings and Documentation 36
2.4 Requirements for GDOT Office and Equipment 36
2.5 Web-Based Project Management Program 36

3 RESERVED 1

4 ENVIRONMENTAL 1
4.1 General Requirements 1
4.2 Environmental Approvals 2
4.2.1 Responsibilities Regarding Environmental Studies 2
4.2.2 GDOT Review and Approval of Environmental Permits 4
4.3 Required Submittals 5

5 RIGHT OF WAY (ROW) 1
5.1 General Requirements 1

5.2 Administrative Requirements 1
5.3 DB Team's ROW Scope of Services 2
5.4 Responsibilities of DB Team 2
5.5 Responsibilities of GDOT 3
5.6 GDOT Project Monitor/Reviewer 3
5.7 Responsibilities of the Office of the Attorney General 3
5.8 ROW Acquisition Plan 4
5.9 Schedule and Review Procedures 5
5.10 Acquisition Process Summary 6
5.11 DB Team Conflict of Interest 6
5.12 Meetings 7
5.13 Documentation and Reporting 7
5.14 Pre-Acquisition Activities 8
5.14.1 ROW Plans and Engineering 8
5.14.2 Title Services 8
5.14.3 Introduction to Property Owners 8
5.15 Appraisals 9
5.15.1 Appraisal Services 9
5.16 Acquisition Activities 10
5.16.1 DB Team Responsibilities During ROW Negotiations 10
5.17 Early ROW Acquisition 14

6 UTILITY ADJUSTMENTS 1
6.1 General Requirements 1
6.1.1 When Utility Adjustment is Required 1
6.1.3 Recordkeeping 6
6.2 Administrative Requirements 6
6.2.1 Standards 6
6.2.2 Communications 6
6.2.3 Worksite Utility Coordination Supervisor 6
6.2.4 Real Property Matters 9
6.3 Design 12
6.3.1 DB Team's Responsibility for Utility Identification 12
6.3.2 Technical Criteria and Performance Standards 12
6.3.3 Memorandum of Understanding (MOU) 13
6.3.4 Utility Work Plans 14
6.4 Construction 21
6.4.1 Reserved 21
6.4.2 General Construction Criteria 21
6.4.3 Inspection of Utility Owner Construction 23
6.4.4 Scheduling Utility Adjustment Work 23
6.4.5 Standard of Care Regarding Utilities 24
6.4.6 Emergency Procedures 24
6.4.7 Switch Over to New Facilities 24
6.4.8 Traffic Control 24
6.5 Deliverables 24
6.5.1 Utility Work Plan Submittals 25

6.5.2 Preliminary Utility Status Report ... 25
6.5.3 Subsurface Utility Engineering (SUE) Requirements ... 25
6.5.4 Utility As-Builts Requirements ... 26

7 RIGHT OF WAY (ROW) – ADDITIONAL PROPERTIES ... 1
7.1 General Requirements ... 1
7.2 Administrative Requirements ... 1
7.2.1 Revised ROW Acquisition Plan - Additional Property Submittals ... 1
7.2.2 DB Team's ROW Properties Scope of Services ... 2
7.2.3 Requirements of DB Team ... 2
7.2.4 DB Team Conflict of Interest ... 2
7.2.5 Meetings ... 3
7.2.6 Documentation and Reporting ... 3
7.2.7 Responsibilities of GDOT ... 4
7.2.8 Responsibilities of the Office of Georgia Attorney General ... 4
7.3 Reserved ... 4
7.4 Reserved ... 4
7.4.1 Reserved ... 4
7.4.2 Property Fencing ... 4
7.5 Access to the Work ... 4

8 GEOTECHNICAL ... 1
8.1 General Requirements ... 1
8.2 Design Requirements ... 1
8.2.1 Subsurface Geotechnical Investigation by DB Team ... 1
8.2.2 Pavement Design ... 2
8.3 Construction ... 2
8.4 Deliverables ... 3

9 SURVEYING AND MAPPING ... 1
9.1 General Requirements ... 1
9.2 Administrative Requirements ... 1
9.2.1 Property Owner Notification ... 1
9.3 Design Requirements ... 1
9.3.1 Units ... 1
9.3.2 Survey Control Requirements ... 1
9.3.3 Conventional Method (Horizontal & Vertical) ... 2
9.3.4 Reserved ... 4
9.3.5 Right of Way Surveys ... 4
9.3.6 Survey Records and Reports ... 5
9.4 Construction Requirements ... 5
9.4.1 Units ... 5
9.4.2 Construction Surveys ... 5
9.5 Deliverables ... 5
9.5.1 Final ROW Surveying and Mapping ... 5
9.5.2 ROW Monuments ... 5

10 GRADING ... 1
10.1 General ... 1

10.2 Preparation within Project Limits 2
10.3 Slopes and Topsoil 2
10.4 Deliverables 2
10.4.1 Released for Construction Documents 2

11 ROADWAYS 1
11.1 General Requirements 1
11.2 Design Requirements 2
11.2.1 Typical Section(s) and Pavement Design 3
11.2.2 Additional Roadway Design Requirements 3
11.2.3 Allowable Design Exception(s)/Variance(s) 4
11.2.4 Visual Quality 4
11.2.5 Permanent Lighting 4
11.2.6 Related Transportation Facilities 6
11.3 Deliverables 6

12 DRAINAGE 1
12.1 General Requirements 1
12.2 Administrative Requirements 1
12.2.1 Data Collection 1
12.2.2 Coordination with Other Agencies 2
12.3 Design Requirements 2
12.3.1 Surface Hydrology 4
12.3.2 Storm Sewer Systems 4
12.3.3 Hydraulic Structures (Culverts/Bridges) 7
12.4 Construction Requirements 10
12.5 Deliverables 10

13 STRUCTURES 1
13.1 General Requirements 1
13.2 Design Requirements 1
13.2.1 Design Parameters 1
13.2.2 Bridge Decks and Superstructures 2
13.2.3 Bridge/ Retaining Wall Foundations 3
13.2.4 Bridge Railing and Barriers 4
13.2.5 Retaining Walls 4
13.2.6 Aesthetics 4
13.2.7 Drainage Structures 5
13.2.8 Sign, Illumination, and Traffic Signal Supports 5
13.2.9 Widening/Modification of Existing Structure 6
13.2.10 Toll Gantry Structures 6
13.3 Construction Requirements 6
13.3.1 Concrete Finishes 6
13.3.2 Structure Metals 6
13.4 Final Bridge Inspection Prior to Service Commencement 6
13.5 Deliverables 7

14 RESERVED 1

15 LANDSCAPE AND HARDSCAPE ENHANCEMENTS 1
15.1 General Requirements 1
15.2 Administrative Requirements 1
15.2.1 Design Requirements 1
15.2.2 Reserved 2
15.2.3 Personnel 2
15.3 Design Requirements 2
15.3.1 Landscape and Hardscape Enhancement Principles and Strategies 2
15.3.2 Reserved 3
15.3.3 Reserved 3
15.3.4 Trees, Shrubs, and Other Plant Materials 3
15.3.1 Reserved 3
15.3.2 Reserved 3
15.4 Construction Requirements 3
15.5 Deliverables 3

16 SIGNING, PAVEMENT MARKING, SIGNALIZATION 1
16.1 General Requirements 1
16.2 Administrative Requirements 1
16.2.1 Meetings 1
16.3 Design Requirements 1
16.3.1 Final Plans 1
16.3.2 Permanent Signing and Delineation 1
16.3.3 Project Signs – Outside the Existing and Required ROW 3
16.3.4 Reserved 3
16.3.5 Specific Service Signs 3
16.3.6 Sign Support Structures 3
16.3.7 Permanent Pavement Marking 3
16.3.8 Permanent Signalization 4
16.4 Construction Requirements 5
16.4.1 Permanent Signing and Delineation 5
16.4.2 Permanent Pavement Marking 5
16.4.3 Permanent Signalization 5
16.5 Deliverables 5
16.5.1 Permanent Signing and Delineation 5
16.5.2 Permanent Pavement Marking 6
16.5.3 Permanent Signalization 6

17 INTELLIGENT TRANSPORTATION SYSTEMS 1
17.1 General Description 1
17.1.1 General Purpose 1
17.1.2 Reserved 1
17.1.3 Transportation Management Center (TMC) Improvements 1
17.2 Design and Construction Requirements 2
17.3 Testing and Acceptance 2
17.3.1 End-To-End Testing 3
17.4 Warranty 3

17.4.1 Protection of Existing ITS ... 3

18 TRAFFIC CONTROL ... 8
18.1 General Requirements ... 8
18.2 Administrative Requirements ... 8
18.2.1 Transportation Management Plan ... 8
18.3 Design Requirements ... 9
18.3.1 Traffic Control Plans ... 9
18.4 Construction Requirements ... 12
18.4.1 DB Team Responsibility ... 12
18.4.2 Access ... 12
18.4.3 Detours ... 12

19 MAINTENANCE DURING THE DESIGN-BUILD PERIOD ... 1
19.1 General Requirements ... 1
19.1.1 Reserved ... 1
19.1.2 GDOT Obligation to Repair ... 1

20 BICYCLE AND PEDESTRIAN FACILITIES ... 1
20.1 General Requirements ... 1
20.2 Design Requirements ... 1
20.2.1 Bicycle Facilities ... 1
20.2.2 Pedestrian Facilities ... 1
20.2.3 Final Plans ... 1

21 RESERVED ... 2

22 SOUND BARRIERS ... 1
22.1 General ... 1

23 SUBMITTALS ... 1
23.1 General ... 1
23.2 Design Submittals and Progress of Design Work ... 1
23.2.1 Construction Phasing and Additional Submittal Requirements ... 2
23.3 Submittals Process ... 4
23.4 Shop Drawings and Temporary Works Submittals ... 7
23.4.1 General ... 7
23.4.2 Work Items Requiring Shop Drawings ... 8
23.4.3 Schedule of Submittals ... 8
23.4.4 Style, Numbering, and Material of Submittals ... 8
23.4.5 Submittals and Copies ... 9
23.4.6 Processing of Shop Drawings ... 10
23.4.7 Other Requirements for Shop Drawings for Bridges ... 11
23.4.8 Modifications on Construction ... 12
23.5 As-Built Plans ... 13

Volume 3 Attachments

Attachment 2-1 GDOT Weather Zones

Attachment 4-1 SP 107.23G Legal Regulations and Responsibility

Attachment 6-1 ITS Locate Request Form

1 GENERAL

Refer to volume 2.

2 PROJECT MANAGEMENT

The DB Team shall establish and maintain an organization that effectively manages all Elements of the Work. This project management effort shall be defined by and follow the Project Management Plan (PMP), which is a collection of several management plans describing discrete Elements of the Work. The PMP is an umbrella document that describes the DB Team's managerial approach, strategy, and quality procedures to design, and build the Project and achieve all requirements of the Design-Build (DB) Documents. The PMP should be written in a manner where it is beneficial for the management of the project and shall establish parameters to monitor the project's scope, schedule, and budget. The PMP shall establish procedures to track risks to the scope, schedule, and budget for the project as well as management strategies for mitigating such risks.

The DB Team will develop the PMP and obtain acceptance from Georgia Department of Transportation (GDOT), The DB Team is responsible for supplementing necessary information and material to complete the updates of the PMP, as required, such as the DB Team's quality management plan, DB Team's risk management plan, and DB Team's management structure and project team organization chart.

The DB Team shall submit to GDOT the PMP within thirty (30) days following Notice to Proceed (NTP) 1; and the DB Team shall obtain acceptance by GDOT prior to any design submittals. Revisions as necessary to the PMP will be made by the DB Team.

2.1 Project Management Plan Requirements

The Project Management Plan is the guide for implementing the project and documents assumptions and decisions regarding communication, management processes, execution and overall project control. The ultimate purpose of the Project Management Plan is to clearly define the roles, responsibilities, procedures and processes that will result in the project being managed such that it is completed:

- On-time,
- Within budget,
- With the highest degree of quality,
- In a safe manner for both the individuals working on the project and for the traveling public, and
- In a manner in which the public trust, support, and confidence in the project will be maintained.

The Project Management Plan addresses the entire project lifecycle and ensures that the project will be managed holistically and as a continuum, not incrementally as the project progresses. The DB Team is responsible to implement and comply with the Project Management Plan throughout the Project's lifecycle.

The format for the Project Management Plan follows, sections of the PMP listed below may be omitted if not applicable to the Project:

2.1.1 Project Descriptions and Scope of Work

The complete description of the project, along with the history of its development and important decisions (after award) shall be documented in the Project Management Plan. A clearly defined project scope shall be included. This scope statement should include all the requirements to be executed, verified and delivered. The Project Management Plan shall clearly define the project scope of work, including construction, environmental work, utilities, and right of way.

2.1.2 Project Organizational Chart, Roles, and Responsibilities

A project organizational chart shall be attached for clarity, with a brief description of roles and responsibilities for each section or individual team.

The DB Team will be responsible for preparing an organizational chart representing the DB Team's management structure and identifying the DB Team's project team. The DB Team's project team shall include technical and functional support teams such as right of way, utilities, design, construction, project controls, Quality Assurance (QA), Quality Control (QC), communications and outreach, environmental monitoring and review, safety, security, etc… (as required). Roles and responsibilities not required for this project do not need to be identified in the organizational chart.

The DB Team must match the personnel identified in the SOQ and DBA unless otherwise accepted by GDOT. Changes to the DB Team must be experienced key personnel dedicated to the success of the project, with the requisite technical, managerial, leadership, and communication skills needed to proficiently perform the required tasks.

2.1.3 Project Phases

The planning and project development and implementation process may include several phases. These phases should be determined based on the needs and scope of the Project as determined by the DB Team with consultation with GDOT. This section of the PMP shall include the phases of the Work and a description of each phase. The DB Team shall also provide personnel information required to manage and complete the work for each phase. Major tasks, milestones, and deliverables shall be listed for each phase. In addition, other governmental approvals and permits required to complete each phase shall be identified.

2.1.4 Design Quality Assurance

The DB Team shall develop an overall Quality Management Plan. The Quality Management Plan shall comprise of a Design Quality Assurance (QA) Plan to include the following:

- Overall design QA process.
- Design Quality Control (QC) Plan including procedures and documentation.
- Design standards to be adhered to, including but not limited to all references listed in Volume 3 Manuals.
- Design criteria specific to the individual project.
- Procedures for preparing and checking individual plans, specifications, estimates, calculations, and other submittal items.
- Procedures for preparing and checking any unique or highly specialized designs.
- Procedures for coordinating work performed by different persons for related tasks, to ensure that conflicts, omissions, or errors do not occur between drawings or between drawings and other design documents.
- Procedures for coordinating and obtaining permits from permitting agencies, utility companies, and railroad companies, as applicable. This shall include procedures for ensuring that all permitting, utility, and railroad requirements are incorporated into the design of the project; and procedures for coordinating submittals and agency reviews such that the overall project schedule is not delayed.
- Level, frequency, and methods of review of the adequacy of the total project design. Methods by which all Final Plans shall be independently reviewed; verified for constructability, completeness, clarity, and accuracy; and back-checked.
- Level and frequency of audit and oversight design reviews (concerning QA and validity of consultant payments) to be performed by GDOT, the Federal Highway Administration (FHWA) (as applicable), independent consultants, and/or other agencies (as applicable).
- Procedures for reviewing and checking design drawings and documents required during construction.
- Qualifications for all key design personnel.
- Documentation and submission procedures to ensure that the established design QA procedures have been followed.
- QA/QC statement letter is required to be submitted with all design submittals.

The design QA procedures will be part of the DB Team's Quality Management Plan to be developed and provided by the DB Team. The Quality Management Plan shall satisfy the requirements stated in the Technical Provisions.

2.1.5 ~~Construction Quality Assurance~~Reserved

~~The DB Team's Quality Management Plan shall comprise of a Construction Quality Assurance Plan to include the following:~~

- ~~Overall construction QC process.~~
- ~~Construction QC Plan including QC procedures and documentation.~~
- ~~When testing and inspection is required of the Contractor by the DB Contract, construction standards to be adhered to for performing construction inspection.~~

~~Documents to be used that will define materials to be certified, materials to be tested, sampling procedures, testing procedures, record keeping and reporting procedures, and nonconformance plan.~~

- ~~Based on requirements of GDOT Standard Specifications and other requirements of the DB Contract, identify the party and personnel responsible for QA and QC, i.e., responsibilities of the contractor versus the GDOT for sampling, testing, monitoring, and reporting test results,~~
- ~~Frequency and agency involvement for construction coordination (progress) and/or partnering meetings.~~
- ~~Procedures for coordinating with permitting agencies, utility companies, and railroad companies (as applicable) during construction to ensure that all requirements are incorporated into the project such that the overall project schedule is not delayed.~~
- ~~Level and frequency of inspections to identify and correct any deficiencies in the project construction that do not meet the requirements of the plans, specifications, and other binding documents.~~
- ~~Level and frequency of audit and oversight construction reviews (concerning QA and validity of contractor payments) to be performed by the GDOT, FHWA (as applicable), independent consultants, and/or other agencies (as applicable).~~
- ~~Qualifications for all key construction personnel.~~
- ~~Documentation and submission procedures to ensure that the established construction QA procedures have been followed.~~

~~The construction QA procedures will be part of the DB Team's Quality Management Plan to be developed and provided by the DB Team. The Quality Management Plan shall satisfy the requirements stated in the Technical Provisions~~.

2.1.6 Environmental Monitoring

The DB Team shall adopt a proactive approach for overseeing and inspecting environmental Work during construction to help guard against unanticipated impacts to the environment. Unanticipated impacts to the environment can lead to fines and schedule delays. The DB Team shall be responsible for complying with the scope of environmental commitments from the NEPA/GEPA document, environmental permits, and other environmental approvals are implemented.

2.1.7 Right of Way

The DB Team shall describe plan for Right of Way acquisition as required..

2.1.8 Safety and Security

The DB Team shall be responsible for the safety of its personnel and of the general public affected by the Project.

DB Team shall submit to GDOT for acceptance a comprehensive safety plan ("Safety Plan") that is consistent with and expands upon the preliminary safety plan submitted with the Proposal. The Safety Plan shall fully describe DB Team's policies, plans, training programs, Work Site controls, and Incident response plans to ensure the health and safety of personnel involved in the Project and the general public affected by the Project during the Term of the DB Documents.

DB Team's Safety Plan shall address procedures for immediately notifying GDOT of all Incidents arising out of or in connection with the performance of the Work, whether on or adjacent to the Project.

This section shall define the requirements to be incorporated into the Project in order to ensure that the Project is a safe and secure environment for all individuals working on the Project. The prevention of accidents during execution of the project shall be a primary concern of all participants, and shall be the responsibility of all levels of management. Safety shall never be sacrificed for production, but shall be considered an integral part of an efficient and quality Project.

It is suggested that safety and security procedures include the following:

- Safety and health standards to be adhered to.
- Roles and responsibilities of the safety/security staff.
- Contractors (meaning prime contractors and subcontractors combined) having a Safety Director and an accepted safety manual (or plan) available to all employees.
- Contractors holding periodic on-site safety meetings.
- Contractors conducting periodic on-site safety inspections.
- Contractors providing safety training for all new employees, and refresher training for all employees.
- Contractors conducting drug screening for all new hires.
- Contractors establishing daily housekeeping and clean-up procedures.
- Possible employee sharing of accident prevention savings.
- Having first-aid and medical kits readily available.
- Having a site security plan, possibly including such items as restricted parking near vulnerable structures, physical barriers (fences, barricades, etc.), coordinated efforts with local law enforcement officials during heightened threat levels, video surveillance, alarm systems, emergency telephones, etc.
- Having an emergency preparedness and incident management plan, including roles and responsibilities, emergency evacuations, communications, first responder awareness training, and field drills.
- Establishment of an employee identification (ID) system.
- Level and frequency of audit and oversight safety/security reviews to be performed by GDOT, FHWA, independent consultants, and/or other agencies (as applicable).
- Safety and security periodic reporting (normally monthly).

In addition, appropriate threat and vulnerability assessments shall be made and taken into consideration thought the Project's life cycle. The transportation elements of the project could have a significant impact on regional safety and security plans.

2.1.9 Traffic Management

The DB Team shall develop a Transportation Management Plan and a traffic control plan for each phase of its Work. The DB Team's Transportation Management Plan and the traffic control plans shall comply with the requirements of Section 18.

2.1.10 Project Communications (Media and Public Information)

Refer to Volume 2

2.1.11 Closeout Plan

A closeout plan consisting of the requirements to provide a coordinated transition from construction to operations along with the roles and responsibilities of various agencies and offices shall be included in the Project Management Plan.

2.1.12 Appendices

The DB Team shall include the various management plans required by the DB Agreement and the Technical Provisions in the Project Management Plan as appendices.

2.1.13 Project Management Plan Checklist

The following items shall be included in the Project Management Plan:

- Project Description and Scope of Work
- Goals and Objectives
- Project Organizational Chart, Roles, and Responsibilities
- Project Phases
- Procurement and Contract Management
- Project Reporting and Tracking
    - Executive Summary
    - Project Activities and Deliverables
    - Action Items/Outstanding Issues
    - Project Schedule
    - Project Cost
    - Project Quality
    - Other Status Reports
- Internal and Stakeholder Communications
- Project Management Controls (Scope, Cost, Schedule, Claims, etc.)
    - Risk Management Plan (if required)
    - Scope Management Plan (if required)

  - Scheduling Software
  - Change Order and Extra Work Order Procedures
  - Claims Management Procedures
  - Other Programs
- Design Quality Assurance
- Construction Quality Assurance
- Environmental Monitoring
- Right of Way
- Safety and Security
- Traffic Management
- Project Communications (Media and Public Information) (if required)
- Closeout Plan
- Project Documentation
- Other Possible Sections (as required)
- Appendices

Other items may be added depending on the Project's characteristics. An updated PMP should occur anytime there is a scope change to the project.

2.2 Schedule Requirements

2.2.1 General Schedule Requirements

The DB Team shall comply with the Critical Path Method (CPM) schedule requirements as defined in this Section 2.2. The DB Team shall be responsible for ensuring that all work sequences are logical and that the CPM schedule indicates a coordinated plan. The CPM schedule shall indicate the order and interdependence of activities and the sequence for accomplishing the work. The CPM schedule shall illustrate all activities that occur during the contractual life of the Project, whom is responsible for each respective activity, and the duration for each activity as set forth in the DB Documents.~~The DB Team shall comply with the Critcial Path Method (CPM) schedule requirements as defined in this Section 2.2. The Contractor shall be responsible for ensuring that all work sequences are logical and that the CPM schedule indicates a coordinated plan. The CPM schedule shall indicate the order and interdependence of activities and the sequence for accomplishing the work.~~

2.2.2 ~~120 Day Schedule Requirements~~Reserved

~~The DB Team shall develop a 120 Day Schedule that meets all of the requirements of the Project Baseline Schedule but shall only be inclusive of those activities that will begin on or before NTP1 + 120 days.~~

~~The DB Team shall submit monthly updates to the 120 Day Schedule until the Project Baseline Schedule is accepted. Monthly updates shall meet the requirements of the Project Schedule Updates.~~

2.2.3 Project Baseline Schedule Requirements

DB Team shall use the Preliminary Baseline Schedule submitted with the Proposal as a foundation to prepare a Project Baseline Schedule and shall submit the Project Baseline Schedule to GDOT for review and acceptance. The schedule shall show milestones for intermediate and contract completion dates no later than those specified in the contract. All specified closure or restriction periods, non-work periods or any other time restrictions in the contract shall be incorporated in the project baseline schedule. The Project Baseline Schedule shall be submitted no later than ninety (90) calendar days after NTP 1. Should a NEPA/GEPA Reevaluation be required, the Project Baseline Schedule shall illustrate activities of both GDOT and the DB Team for the respective activities that each are responsible for. The NEPA/GEPA Reevaluation schedule activities shall be in conformance with the approved NEPA/GEPA Reevaluation time provided for in Section 4.

The Project Baseline Schedule shall include all major Work activities required under the DB Documents, in sufficient detail to monitor and evaluate design and construction progress, from commencement of the Work to Final Acceptance of the Work. If required, the Project Baseline Schedule shall also include activities based on GDOT schedule for acquisition of any Proposed Right of Way, as well as for any DB Team identified Additional Properties, Utility Adjustments, permit acquisitions, and interfaces with other projects, localities, municipalities and other Governmental Entities. For each major activity, the DB Team shall indicate the duration (in Days) required to complete the activity, the anticipated start and finish date of each activity. In addition, the Project Baseline Schedule shall indicate the sequence of performing each major activity and the logical dependencies and inter-relationships between the activities.

The Project Baseline Schedule shall include a listing of all Submittals as called out in Volume 2, Section 23, other sections of the DB Documents, or as required to obtain any acceptance by GDOT or any other Government Entity. Submittal activity durations shall include specific durations for GDOT review and/or acceptance of DB Team's submittals.

Float shall not be considered as time for the exclusive use of or benefit of either GDOT or the DB Team, but shall be considered as a jointly owned, expiring resource available to the Project and shall not be used to the financial detriment of either party. Any method utilized to sequester Float calculations will be prohibited without prior acceptance of GDOT. Any schedule, including the Project Baseline Schedule and all updates thereto, showing an early completion date shall show the time between the scheduled completion date and the applicable Milestone Schedule Deadline as "Project Float."

The Project Baseline Schedule shall define the timeframe for completion of the Project and achievement of all contractual milestones, and be used to monitor progress and denote changes that occur during design and construction. Additional schedule requirements are as follows:

- The Project Baseline Schedule shall be organized in a Work Breakdown Structure (WBS). Each schedule activity shall be mapped to one and only one of the parent WBS activities. The Project Baseline Schedule shall include all major Work activities required under the DB Agreement. The WBS identified below shall be the basis for organizing all Work under the Contract Documents and shall be used to structure the baseline schedule. The WBS shall conform to the level of structure below, which represents the minimum levels of the WBS that all schedule information shall rollup to. Sections listed below that are not applicable to the project should be removed at the DB Team's discretion. The DB Team shall further develop and detail the base WBS, the minimum requirements of which are bulleted below, in accordance with its specific schedule activities and retaining the ability to summarize to at least the same level as shown in the base. The DB Team may add additional activities to the levels presented below with GDOT's prior written acceptance. GDOT will provide a WBS template as a RID.

~~DB Team shall use the Preliminary Baseline Schedule submitted with the Proposal as a foundation to prepare a Project Baseline Schedule and shall submit the Project Baseline Schedule to GDOT for review and acceptance. The schedule shall show milestones for intermediate and contract completion dates no later than those specified in the contract. All specified closure or restriction periods, non-work periods or any other time restrictions in the contract shall be addressed in the project baseline schedule. The Project Baseline Schedule shall be submitted no later than ninety (90) days after NTP 1. Should a NEPA/GEPA Reevaluation be required, the Project Baseline Schedule shall illustrate activities of both GDOT and the DB Team for the respective activities that each are responsible for. The NEPA/GEPA Reevaluation schedule activities shall be in conformance with the approved NEPA/GEPA Reevaluation time provided for in Section 4. DB Team shall submit an electronic (Primavera P6, current edition as accepted by GDOT) and PDF version (11 x 17) for the schedules. The DB Team shall also submit a Critical Path Schedule (zero float activities) as a PDF version (11x17) for the Project.~~

~~The Project Baseline Schedule shall include all major Work activities required under the DB Documents, in sufficient detail to monitor and evaluate design and construction progress, from commencement of the Work to Final Acceptance of the Work. If required, the Project Baseline Schedule shall also include activities based on GDOT schedule for acquisition of any Proposed Right of Way, as well as for any DB Team identified Additional Properties, Utility Adjustments, permit acquisitions, and interfaces with other projects, localities, municipalities and other Governmental Entities. For each major activity, the DB Team shall indicate the duration (in Days) required to perform the activity and the anticipated beginning and completion date of each activity. In addition, the Project Baseline Schedule shall indicate the sequence of performing each major activity and the logical dependencies and inter relationships amongst the activities.~~

~~The Project Baseline Schedule shall include a listing of all Submittals as called out in the Volume 2, Section 23, other sections of the DB Documents, or as required to obtain any acceptance by GDOT or any other Government Entity. Submittal activity durations~~

~~shall include specific durations for GDOT review and/or acceptance of DB Team's submittals.~~

~~Float shall not be considered as time for the exclusive use of or benefit of either GDOT or DB Team, but shall be considered as a jointly owned, expiring resource available to the Project and shall not be used to the financial detriment of either party. Any method utilized to sequester Float calculations will be prohibited without prior acceptance of GDOT. Any schedule, including the Project Baseline Schedule and all updates thereto, showing an early completion date shall show the time between the scheduled completion date and the applicable Milestone Schedule Deadline as "Project Float."~~

~~The Project Baseline Schedule shall define the timeframe for completion of the Project and achievement of all contractual milestones, and be used to monitor progress and denote changes that occur during design and construction. Additional schedule requirements are as follows:~~

- ~~The Project Baseline Schedule shall be organized in a Work Breakdown Structure (WBS). Each schedule activity shall be mapped to one and only one of the parent WBS activities. The DB Team shall further develop and detail the base WBS, the minimum requirements of which are bulleted below, in accordance with its specific schedule activities and retaining the ability to summarize to at least the same level as shown in the base. The DB Team may add additional activities to the levels presented below with GDOT's prior written acceptance. The Project Baseline Schedule shall include all major Work activities required under the DB Agreement.~~

- ~~The following WBS shall be the basis for organizing all Work under the Contract Documents and shall be used to structure the baseline schedule. The WBS shall conform to level structure below, which represents the minimum levels of the WBS that all schedule information shall rollup to. Sections listed below that are not applicable to the project should be removed at the DB Team's discretion. GDOT will provide a template WBS to the DB Team.~~

1.0 Project Name
- 1.1 Project Management
  - 1.1.1. Administration
  - 1.1.2. Bonds and Financing
  - 1.1.3. Insurance
  - 1.1.4 QA/QC
- 1.2. Design
  - 1.2.1. Environmental
    - 1.2.1.1. (By subsections determined by DB Team w/GDOT concurrence)
  - 1.2.2. Roadway
    - 1.2.2.1. (By subsections determined by DB Team w/GDOT concurrence)
  - 1.2.3. Drainage
    - 1.2.3.1. (By subsections determined by DB Team w/GDOT concurrence)

1.2.4. Structures
1.2.4.1. (By subsections determined by DB Team w/GDOT concurrence)
1.2.4.1.1. Bridge
1.2.4.1.1.1. (By Bridge No.)
1.2.4.1.2. Retaining Wall/Noise Wall
1.2.4.1.2.1. (By Retaining Wall/Noise Wall)
1.2.4.1.3. Building
1.2.4.1.3.1. (By Building)
1.2.5. Railroad
1.2.5.1. _____RR
1.2.5.2. _____RR
1.2.6. Landscape & Aesthetics
1.2.6.1. (By subsections determined by DB Team w/GDOT concurrence)
1.2.7. Traffic
1.2.7.1. (By subsections determined by DB Team w/GDOT concurrence)
1.2.7.1.1. Signing
1.2.7.1.2. Traffic Signal Systems
1.2.7.1.3. Roadway Illumination
1.2.8. Intelligent Transportation System (ITS)
1.2.8.1. (By subsections determined by DB Team w/GDOT concurrence)
1.2.9. Traffic Management and Controls During Construction
1.2.9.1. (By subsections determined by DB Team w/GDOT concurrence)
1.2.10. Tolling
1.2.10.1. (By subsections determined by DB Team w/GDOT concurrence)
1.2.11. QA/QC
1.2.11.1. (By subsections determined by DB Team w/GDOT concurrence)
1.3. Right of Way (ROW) Acquisition
1.3.1. (By subsections determined by DB Team w/GDOT concurrence)
1.3.1.1 (By Parcel No.)
1.4. Utility Adjustments
1.4.1. (By Utility Owner)
1.4.1.1. Negotiate Agreements
1.4.1.2. Locate Existing Utilities
1.4.1.3. Prepare Utility Assembly
1.4.1.4. Construct Utility Adjustment
1.5. Construction
1.5.1. Mobilization
1.5.2. Roads
1.5.2.1. (By subsections determined by DB Team w/GDOT concurrence)
1.5.2.1.1. Local Roads
1.5.2.1.1.1. Erosion Control
1.5.2.1.1.2. Earthwork
1.5.2.1.1.3. Pavement, Pvmt Markings
1.5.2.1.1.4. TCP/MOT
1.5.2.1.1.5. Other Rdwy. Appurtenances (Barriers, Guardrail, Impact Attenuators)

1.5.2.1.1.6. Fencing
1.5.2.1.2. Mainlines and Ramps
1.5.2.1.2.1. Erosion Control
1.5.2.1.2.2. Earthwork
1.5.2.1.2.3. Pavement, Pvmt Markings
1.5.2.1.2.4. TCP/MOT
1.5.2.1.2.5. Other Rdwy Appurtenances (Barriers, Guardrail, Impact Attenuators)
1.5.2.1.2.6. Fencing
1.5.2.1.3. Managed Toll Lanes
1.5.2.1.3.1. Erosion Control
1.5.2.1.3.2. Earthwork
1.5.2.1.3.3. Pavement, Pvmt Markings
1.5.2.1.3.4. TCP/MOT
1.5.2.1.3.5. Other Rdwy Appurtenances (Barriers, Guardrail, Impact Attenuators)
1.5.2.1.2.6. Fencing
1.5.3. Drainage
1.5.3.1. (By subsections determined by DB Team w/GDOT concurrence)
1.5.3.1.1. Cross Culverts
1.5.3.1.1.1. (By location)
1.5.3.1.2. Local Roads
1.5.3.1.2.1. Trunkline
1.5.3.1.2.2. Inlets and Laterals
1.5.3.1.3. Mainlanes, Managed Toll Lanes, and Ramps
1.5.3.1.3.1. Trunkline
1.5.3.1.3.2. Inlets and Laterals
1.5.3.1.4. Crossing Streets
1.5.3.1.4.1. (By Street)
1.5.4. Structures
1. 5.4.1. (By subsections determined by DB Team w/ GDOT concurrence)
1. 5.4.1.1. Bridges
1. 5.4.1.1.1. (By Bridge No.)
1. 5.4.1.1.1.1. Foundations
1. 5.4.1.1.1.2. Substructure
1. 5.4.1.1.1.3. Superstructure
1. 5.4.1.2. Retaining Walls
1. 5.4.1.2.1. (By Retaining Wall No.)
1. 5.4.1.3. Noise Walls
1. 5.4.1.3.1. (By Noise Wall No.)
1.5.5. Railroad
1.5.5.1. _____RR (By subsections determined by DB Team w/ GDOT concurrence)
1.5.5.1.1. Bridges
1.5.5.1.2. Trackwork
1.5.5.1.2.1. Track
1.5.5.1.2.2. Switches

1.5.5.1.2.3. Signal Work
1.5.5.1.204. Flagging
1.5.6. Landscaping
1.5.6.1. (By subsections determined by DB Team w/GDOT concurrence)
1.5.6.1.1. Trees and Shrubs
1.5.6.1.2. Seeding and Sodding
1.5.6.1.3. Plants and Ground Cover
1.5.7. Traffic Related Elements
1.5.7.1. (By subsections determined by DB Team w/GDOT concurrence)
1.5.7.1.1. Sign and Sign Support Structures
1.5.7.1.1.1 Mainlines and Ramps
1.5.7.1.1.2 Frontage Roads
1.5.7.1.1.3 Crossing Streets
1.5.7.1.2. Traffic Signal Systems
1.5.7.1.2.1. (By location)
1.5.7.1.3. Roadway Illumination
1.5.7.1.3.1. Mainlines and Ramps
1.5.7.1.3.2. Frontage Roads
1.5.7.1.3.3. Crossing Streets
1.5.7.1.3.3.1. (by Crossing Street)
1.5.8. ITS
1.5.8.1. (By subsections determined by DB Team w/GDOT concurrence)
1.5.8.1.1. Conduits
1.5.8.1.2. Closed Circuit Television (CCTV)
1.5.8.1.3. Vehicle Detection
1.5.8.1.4. Changeable Message Signs (CMS)
1.5.8.1.5. Lane Control Signals
1.5.9. Traffic Control During Construction
1.5.9.1. (By subsections determined by DB Team w/GDOT concurrence)
1.5.9.1.1. Traffic Mgmt. Strategy/All Stages
1.5.9.1.2. Traffic Control and Signing
1.5.9.1.3. Temporary Detours
1.5.10. Tolling
1.5.10.1. (By subsections determined by DB Team w/GDOT concurrence)
1.5.10.1.1. Electronic Toll Collection System (ETCS) Infrastructure
1.5.10.1.1.1. Conduit Systems and Hubs
1.5.10.1.1.2. Support Structures
1.5.10.1.2. ETCS Equipment
1.5.11. Buildings
1.5.11.1. (By subsections determined by DB Team w/GDOT concurrence)
1.5.11.1.1. (By Building)
1.6. Operations During Construction
1.6.1. Project Patrols and Inspections
1.6.2. Traffic Control and Incident Management
1.6.3. Policing
1.6.4. Power Costs

1.7. Maintenance During Construction
- 1.7.1. Roadway
- 1.7.2. Drainage
- 1.7.3. Structures
- 1.7.4. Pavement Marking, Object Markers, Barriers, Delineators
- 1.7.5. Guard Rail, Safety Barrier, Impact Attenuator
- 1.7.6. Signs
- 1.7.7. Traffic Signal Systems
- 1.7.8. Lighting
- 1.7.9. Fences and Noise Walls
- 1.7.10, Roadside Management
- 1.7.11. ITS and ETCS
- 1.7.12. Buildings
- 1.7.13. Incident Response
- 1.7.14. Customer Response

- The Project Baseline Schedule shall divide the Work into activities with appropriate logic ties to show the DB Team's overall approach to the planning, scheduling, and execution of the Work. The duration and logical relationships of the activities (or summaries at the project phase level) shall be based on the actual duration and relationships anticipated. The DB Team shall not use calendar dates or constraints to logically begin or complete any activity unless calendar dates are shown in the DB Documents (In a case where a specific date is required to start or finish an activity only a start-on-or-before or a finish-on-or-before constraint is to be used).

- ~~The Project Baseline Schedule shall divide the Work into activities with appropriate logic ties to show the DB Team's overall approach to the planning, scheduling, and execution of the Work. The duration and logical relationships of the Project activities (or summaries at the Project Phase level) shall be based on the actual duration and relationships anticipated. The DB Team shall not use calendar dates or constraints to logically begin or complete any Project activity unless calendar dates are shown in the Technical Provisions or other DB Documents (In a case where a specific date is required to start or finish an activity only a start-on-or-before or a finish-on-or-before constraint is to be used).~~

- Activity Identification: DB Team shall use standard and consistent activity identification numbers, textual descriptions, and codes in a manner acceptable to GDOT for the Project Baseline Schedule. DB Team shall maintain consistency with Schedule Template provided in the RID for all Activity Identifications. Only use an alphanumeric coding structure with no spaces, hyphens, symbols or characters other than letters are to be used in the Activity ID. Each Project Baseline Schedule submittal shall be clearly identified. Resubmissions of a Project Baseline Schedule shall use the same revision number as the original submission individually identified by a sequential appended letter (A, B, etc.), as an indication of a revised version.~~Activity Identification: DB Team shall use standard and consistent Project activity identification numbers, textual~~

~~descriptions, and codes in all Project Baseline Schedule submittals, in a manner acceptable to GDOT. DB Team shall maintain consistency with Schedule Template provided in the RID for all Activity Identifications. Only use an alphanumeric coding structure with no blank spaces, hyphens, symbols or characters other than letters are to be used in the Activity ID). Each Project Baseline Schedule submittal shall be clearly identified. Resubmissions of a Project Baseline Schedule shall use the same revision number as the original submission individually identified by a sequential appended letter (A, B, etc.), as an indication of a revised version.~~

- Each required milestone as set forth in Volume 1, Exhibit 9 shall be included in the schedule and conform to the scheduling requirements set forth in the DB Documents, and be assigned a "finish on or before" constraint date.~~Each DB Team required milestone as set forth in Volume 1, Exhibit 9 shall be included in the schedule and conform to the scheduling requirements set forth in the DB Documents, and be assigned a "finish no later than" constraint date.~~

- No unspecified milestones, constraints, float suppression techniques, or use of activity durations, logic ties, and/or sequences deemed unreasonable by GDOT, shall be used in the Project Baseline Schedule. Each Project Baseline Schedule submittal shall clearly and individually define the progression of the Work within the applicable time frame by using separate activities.~~No unspecified milestones, constraints, Float suppression techniques, or use of Project activity durations, logic ties, and/or sequences deemed unreasonable by GDOT, shall be used in the Project Baseline Schedule and will be rejected if submitted. Each Project Baseline Schedule submittal shall clearly and individually define the progression of the Work within the applicable time frame by using separate Project activities.~~

- The Project Baseline Schedule shall be used by all Parties for planning and monitoring the progress of the Work and may serve as supporting documentation for determining the Payment Request amount that may be compensable to be made to DB Team. The updated Project Baseline Schedule shall show actual progress and not calculated progress. Accepted logic changes and approved changes to the DB Documents shall be incorporated into the Project Baseline Schedule (these changes are to be identified with either the change notice number or other method accepted by GDOT to identify the change to the schedule) and identified in the narrative with each submittal.~~The Project Baseline Schedule shall be used by all Parties for planning and monitoring the progress of the Work and may serve as support documentation for determining the Payment Request amount that may be compensable to be made to DB Team. The updated Project Baseline Schedule shall show actual progress and not calculated progress. Accepted logic changes and approved changes to the DB Documents shall be incorporated into the Project Baseline Schedule (these changes are to be identified with either the change notice number or other~~

~~method accepted by GDOT to identify the change to the schedule) and identified in the narrative with each submittal.~~

- If the DB Team chooses to resource load the schedule, the following requirements should be met. The commodity, labor, or equipment quantity that the activity value will be based on, shall be indicated as a resource. Labor-loading of activities shall be based upon total number of workers, not total number of crews. Major construction equipment to be used by the DB Team and subcontractors at all tiers in prosecuting Work shall be assigned to applicable activities. The quantity shall represent the estimated effort in-place for the activity value.~~The commodity, labor, or equipment quantity that the Project activity value will be based on shall be indicated as a resource. Labor-loading of activities shall be based upon total number of workers, not total number of crews. Major construction equipment to be used by the DB Team and subcontractors at all tiers in prosecuting Work shall be assigned to applicable activities. The quantity shall represent the estimated effort in-place for the Project activity value.~~

- The WBS for each work element shall indicate the duration, timing, and logical relationship to other work elements, including relationships to activities other than the parent activity of the particular Work element. Activities shall be broken down minimally to work elements (for example, bridges shall be broken down into foundations, substructure, superstructure, and decks). All Work shall be broken down to similar manageable work elements. For Utility Adjustment Work, if the Work is not shown as an activity itself, such Work shall be shown as a work element, where applicable. For Mobilization pactivities or work elements, DB Team shall provide a list of Work items that are included in each activity or work element.

- The Project Baseline Schedule shall define the timeframe for completion of the Project and achievement of milestones, and be used to monitor progress and denote changes that occur during design and construction.

- The DB Team shall add an activity to the end of the schedule labeled "Weather Delays," this activity shall be a sum of the allotted number of days calculated in the Baseline Narrative Report in Section 2.2.4.

Project Baseline Schedule submittals shall include:

1. Electronic copy (Primavera P6 Version 7.x or greater) of the file used for the proposed Project Baseline Schedule revision

2. A schedule narrative meeting the requirements of Section 2.2.4.

3. A critical path schedule plot

~~1.~~4. A full schedule plot~~The WBS for each Work element shall indicate the duration, timing, and logical relationship to other Work elements, including relationships to Project activities other than the parent Project activity of the particular Work element. Project activities shall be broken down minimally to Work elements (for example, bridges shall be broken down into foundations, substructure, superstructure, and decks). All Work shall be broken down to similar manageable Work elements. For Utility Adjustment Work, if Work is not shown as a Project activity itself, such Work shall be shown as a Work element, where applicable. For Mobilization Project activities or Work elements, DB Team shall provide a list of Work items that are included in each Project activity or Work element. The Project Baseline Schedule shall define the timeframe for completion of the Project and achievement of milestones, and be used to monitor progress and denote changes that occur during design and construction.~~

2.2.3.1 Logic Requirements

Logic ties shall refer to all relationship types. All activities/tasks on the Project Baseline Schedule shall meet the logic requirements below:

- A maximum duration of twenty (20) Calendar Days, and not less than one (1) Day, except activities relating to acceptances and reviews by Governmental Entities, procurement activities, or as otherwise accepted by GDOT.
- Activity relationships shall be Finish-to-Start (FS) with no leads or lags, Finish-to-Finish (FF) or Start-to-Start (SS) with lags no more than ½ of the predecessor's duration.
- The use of lags with a negative value shall not be allowed on any activity relationship type.
- The schedule shall provide sufficient time for all submittals and re-submittal review times required in the DB Documents.
- All activities shown in the schedule, with the exception of the first and last activity, shall have a minimum of one predecessor and a minimum of one successor activity.

2.2.3.2 Calendar Requirements

The use of standard GDOT calendars is recommended for scheduling the Project. A list of standard GDOT calendars is provided for DB Team usage in the Schedule Template with the RID documents. The DB Team shall be allowed to modify or add to these calendars as needed for their specific use provided that the modified or additional calendars are Project Level Calendars and not Global Calendars.

2.2.4 Narrative Requirements

The Project Baseline Schedule and all schedule updates shall include a separate narrative report. The narrative report shall be updated with each schedule submission

and pertain to the work identified in the schedule. For the baseline schedule submittals, the narrative report shall include the following separated into sections:

1. An explanation of the overall plan to complete the project, including where the work will begin and how the work and crews will progress through the project.

2. An explanation of the use and application of the workdays per week, number of shifts per day, number of hours per shift, holidays observed and how the schedule accommodates adverse weather days for each month. Submit a list of the calendars used in the schedule and a definition of their type.

3. Description of the work to be completed each season for multi-year projects.

4. A description of the critical path.

5. An explanation of the use of any allowed constraints, including the reason and purpose for each constraint.

6. A statement describing the status of any required permits.

7. The DB Team's proposed methods of operation for designing and constructing the major portions of the Work required by the DB Documents.

~~7.~~8. A statement that includes a calculation of the number of inclement weather (or weather delays) derived from the table in Section 2.2.8, and a formula showing how the number of days was calculated.

For Project Schedule Updates the narrative shall also include the following:

1. A description of the work performed since the last schedule update. The work performed shall match the work scheduled to be performed since the last schedule update. If the work performed does not match the work scheduled to be performed, the DB Team shall include a detailed description of why there is a discrepancy between the activities that should have been completed or progressed as indicated in the previous schedule submittal. GDOT may withhold payment if the reason for the discrepancy is not deemed an acceptable change in sequencing of activities or outside the DB Team's control (3rd party or weather related) until additional documentation or recovery plan is submitted and accepted as appropriate.

2. A description of the status of the scheduled completion date, focusing on any changes since the previous submission including an explanation if the scheduled completion date is projected to occur after the contract completion date.

3. An explanation if any contract milestone dates are projected to occur after the dates set out in the contract.

4. A description of unusual labor, shift, equipment or material conditions or restrictions encountered.

5. A description of any problems encountered or anticipated since the last schedule update.

6. A statement that identifies any current and anticipated delays. A discussion of delays in the narrative report does not constitute notice in accordance with 105.13.B.9. The statement should include identification of the delayed activity, the type of delay, the cause of the delay, the effect of the delay on other activities and project milestones and identification of actions required to mitigate the delay.

2.2.5 Project Schedule Update Requirements

DB Team shall update, on a monthly basis, the accepted Project Schedule to reflect the current status of the Project, and any accepted Compensation or Relief Events by GDOT. The Schedule Update shall be submitted monthly after acceptance of the Project Baseline Schedule and shall be developed in accordance with the applicable provisions of the DB Documents.

Each Project Schedule Update shall accurately reflect all activities completed as of the Data Date of the updated Project Schedule. All completed or started activities are to be at least one day prior to the Data Date of the schedule. DB Team shall submit the Project Schedule Update as an electronic version in .pdf and .xer formats. The DB Team shall also submit a PDF version of the Critical items graphical report for each Critical Path (zero float activities) sorted by activity early start date.~~Each Project Monthly Status Schedule Update shall accurately reflect all activities completed as of the effective date of the updated Project Baseline Schedule. All completed or started activities are to be at least one day prior to the effective date of the schedule. Each Project Status Schedule Update shall indicate the overall physical completion percentage of the Project (identified as the Schedule % Complete in the Primavera scheduling tool). For each monthly update and revised schedule submittal, the narrative report shall include the following:~~

The Project Schedule Update shall include the following:

1. Electronic copy (Primavera P6 Version 7.x or greater) of the file used for the proposed Project Baseline Schedule revision

2. A schedule narrative meeting the requirements of Section 2.2.4.~~.~~

3. A critical path schedule plot

4. A full schedule plot

5. A ~~four (4) or~~ five (5) week look ahead schedule for the activities to be completed between the schedule submittal and the following month's schedule update.~~.~~

6. A detailed variance report of the~~The~~ previous months ~~schedule submittal's four (4) or~~ five (5) week look ahead schedule. ~~as appropriate~~

~~.~~

~~Indicate the overall physical percent complete of the Project.~~

~~Indicate the physical percent complete of each in progress activity.~~

~~Include the Actual Start and Actual Finish columns of Work.~~

~~Include the Remaining Duration column.~~

~~1.~~ A letter stating the dates which the ~~Contractor~~DB Team could not work on activities identified on the critical path due to inclement weather. If there were no weather delays experienced during the previous month the letter should state ~~so~~as such.~~A schedule narrative meeting the requirements of Section 2.2.4.~~

~~2. A four (4) or five (5) week look ahead schedule for the activities to be completed between the schedule submittal and the following month's schedule update.~~

~~3. The previous schedule submittal's four (4) or five (5) week look ahead schedule as appropriate.~~

~~4. Indicate the overall physical percent complete of the Project.~~

~~5. Indicate the physical percent complete of each in progress activity.~~

~~6. Include the Actual Start and Actual Finish columns of Work.~~

~~7. Include the Remaining Duration column.~~

~~8.~~7. ~~Update schedule to indicate which days during the previous month which were non-working due to weather. Non-working days shall only apply to those items that are on the critical path. The Weather Delay Activity shall be reduced by the number of non-working days that were added into the previous month's activities.~~

No changes in activity durations, calendar assignments, logic ties, or constraints will be allowed in the Project Status Schedule Update without ~~the~~ prior written acceptance of GDOT.

No changes in activity durations, calendar assignments, logic ties, or constraints will be allowed in the Project Schedule Update without the written acceptance of GDOT.

The monthly Project Schedule Update(s) shall reflect updated progress to the Data Date, forecast the finish dates for in-progress ~~Project~~ activities, and reforecast early dates and late dates for remaining ~~Project~~ activities, but shall otherwise contain no

changes in ~~Project~~ activity durations, logic ties, or constraints without acceptance from GDOT. The Project Schedule Update(s) shall also incorporate and fully specify all appropriate information from the previously accepted Project Baseline Schedule. Interruptions to an ~~project~~ activity, after that activity has begun, shall be added a separate activity. The activity that is interrupted shall be split into two activities; the initial activity shall be marked as completed and the new activity shall have a FS relationship with the added interruption activity.~~The monthly Project Schedule Update(s) shall reflect updated progress to the Data Date, forecast the finish dates for in-progress Project activities, and reforecast early dates and late dates for remaining Project activities, but shall otherwise contain no changes in Project activity durations, logic ties, or constraints without acceptance from GDOT. The Project Schedule Update(s) shall also incorporate and fully specify all appropriate information from the previously accepted Project Baseline Schedule. Interruptions to a project activity, after that activity has begun, shall be added a separate activity. The activity that is interrupted shall be split into two activities; the initial activity shall be marked as completed and the new activity shall have a FS relationship with the added interruption activity.~~

GDOT will review the monthly Project Schedule Update(s) for consistency with DB Team's WBS, the current accepted Project Baseline Schedule and the previous months accepted update for conformance with the DB Documents. DB Team shall correct any deficiencies and resubmit the monthly Project Schedule Update(s). GDOT may withhold payment until the Schedule Update is accepted.~~GDOT will review the monthly Project Schedule Update(s) for consistency with DB Team's WBS, the current accepted Project Baseline Schedule and the previous months accepted update for conformance with the DB Documents. DB Team shall correct any deficiencies and resubmit the monthly Project Schedule Update(s). GDOT may withhold payment until the Schedule Update is accepted.~~

2.2.6 Project Baseline Schedule Revisions

As it becomes necessary to modify the Project Baseline Schedule to reflect changes to the current accepted schedule, Work sequences, contractual changes (accepted Relief Events or Compensation Events), or to further subdivide the schedule. The DB Team shall request changes to the Project Baseline Schedule and submit such requested changes in writing to GDOT. GDOT shall have final acceptance authority for requested changes to the Project Baseline Schedule. No changes to the Project Baseline Schedule shall be made without the prior written acceptance of GDOT. Until GDOT approves a change, all Project Baseline Schedule submittals shall be tracked against the previously accepted Project Baseline Schedule. Accepted revisions will be incorporated into the Project Baseline Schedule at the next monthly schedule update.~~As it becomes necessary to modify the Project Baseline Schedule to reflect changes to the current accepted schedule, Work sequences, contractual changes (accepted Relief Events or Compensation Events), or to further subdivide schedule. The DB Team shall request changes to the Project Baseline Schedule and submit such requested changes in writing to GDOT. GDOT shall have final acceptance authority for requested changes to the Project Baseline Schedule. No changes to the Project Baseline Schedule shall be~~

~~made without the prior written acceptance of GDOT. Until GDOT approves a change, all Project Baseline Schedule submittals shall be tracked against the previously accepted Project Baseline Schedule. Accepted revisions will be incorporated into the Project Baseline Schedule at the next monthly schedule update.~~

Project Baseline Schedule revision submittals shall include:

1. Electronic copy (Primavera P6 Version 7.x or greater) of the file used for the proposed Project Baseline Schedule revision
2. Narrative describing in detail any proposed changes to the current version of the Project Baseline Schedule with justification for the changes, including, at the minimum, the following:
    - Changes to activity original durations,
    - Changes to activity relationships and/or schedule logic,
    - Identification of activities that have been added, deleted, or modified,
    - Changes to the Project Baseline Schedule critical path, and /or
    - Changes or delay in any contractual completion date since the last Project Baseline Schedule submittal.~~Transmittal letter~~
- ~~Electronic copy (Primavera P6 Version 7.x or greater) of the file used for the proposed Project Baseline Schedule revision~~
- ~~Narrative describing in detail any proposed changes to the current version of the Project Baseline Schedule with justification for the changes, including, at the minimum, the following:~~
    - ~~Changes to activity original durations,~~
    - ~~Changes to activity relationships and/or schedule logic,~~
    - ~~Identification of activities that have been added, deleted, or modified,~~
    - ~~Changes to the Project Baseline Schedule critical path, and /or~~
    - ~~Changes or delay in any contractual completion date since the last Project Baseline Schedule submittal.~~

GDOT will review the Project Baseline Schedule Revision submittal(s) for consistency with DB Team's current accepted Project Baseline Schedule and for conformance with the DB Documents. Once a Project Baseline Schedule Revision is accepted by GDOT, it shall become the Project Baseline Schedule of record and be used as the basis for subsequent Project Schedule Update(s).

2.2.7 Schedule Display Requirements

Each schedule submitted to GDOT shall display the following items on each page:

- Activity ID
- Activity Description (or Activity Name)
- Original Duration
- Remaining Duration

- Early Start
- Early Finish
- Late Start
- Late Finish
- Actual Start
- Actual Finish
- Total Float
- Percent Complete
- Legend
  - Contract Number
  - District
  - DB Team Name
  - Project Location
  - Original Contract Completion Date
  - Revised Contract Completion Date (as Applicable)
  - Data Date

2.2.8 Time Extensions and Inclement Weather Delays

If the ~~Contractor~~DB Team believes work on the contract has been delayed for reasons beyond its control, a written request for extension of contract time may be submitted in accordance with Georgia S~~s~~tandard ~~s~~Specification 108.07.E.

The Weather Delays activity shall be a sum of the allotted number of days calculated from the tables below. Throughout the life of the Project if a weather delay is experienced on any particular day, that day should be marked as a nonworking day and activity Weather Delays should be reduced by one (1) day of duration. The following tables indicate the number of working and non-working days per month.

	Roadway - Zone 1 (Northern Zone)		Roadway - Zone 2 (Central Zone)		Roadway - Zone 1 (Southern Zone)	
	Working Days	Nonworking Days	Working Days	Nonworking Days	Working Days	Nonworking Days
JAN	11	20	13	18	14	17
FEB	12	16	14	14	15	13
MAR	16	15	17	14	18	13

Formatted: Font: (Default) Arial

APR	16	14	17	13	17	13
MAY	18	13	18	13	20	11
JUN	18	12	19	11	19	11
JUL	18	13	20	11	18	13
AUG	19	12	19	12	21	10
SEP	17	13	17	13	17	13
OCT	17	14	19	12	19	12
NOV	13	17	14	16	16	14
DEC	12	19	15	16	16	15
Total:	187	178	202	163	210	155

	Bridge - Zone 1 (Northern Zone)		Bridge - Zone 2 (Central Zone)		Bridge - Zone 1 (Southern Zone)	
	Working Days	Nonworking Days	Working Days	Nonworking Days	Working Days	Nonworking Days
JAN	14	17	15	16	15	16
FEB	15	13	15	13	16	12
MAR	18	13	18	13	19	12
APR	18	12	18	12	18	12
MAY	19	12	19	12	19	12
JUN	19	11	18	12	18	12
JUL	19	12	18	13	17	14
AUG	20	11	19	12	19	12
SEP	18	12	18	12	17	13
OCT	19	12	20	11	19	12
NOV	15	15	15	15	16	14
DEC	15	16	16	15	17	14
Total:	209	156	209	156	210	155

Note: In the event of a leap year, one (1) day will be added to the Working Days.

If the Project is controlled by bridge related items then the bridge table should be used for calculations.

If a Project spans multiple zones the average will be used for the calculation.

See Attachment 2-1 for delineation between zones.

As stated in Section 2.2.5 the ~~Contractor~~DB Team shall submit a letter each month indicating experienced delay in critical path activities. Submission of this letter does not indicate that the Department agrees to any or all of the days claimed. The Department reserves the right to respond to the letter at any time. Weather delays will not be considered for non-critical path activities.

Formatted: Font: (Default) Arial
Formatted: Font: (Default) Arial
Formatted: Font: (Default) Arial
Formatted: Font: (Default) Arial
Formatted: Font: (Default) Arial
Formatted: Font: (Default) Arial
Formatted: Font: (Default) Arial
Formatted: Font: (Default) Arial
Formatted: Font: (Default) Arial
Formatted: Font: (Default) Arial
Formatted: Font: (Default) Arial

The ~~Contractor~~DB Team's request for extension of time shall include its own analysis, using a method approved by the Engineer. Time extensions for weather delays will only be considered after the Project has reached substantial completion and the remaining activities to complete cannot be affected by weather.~~**GDOT will review the Project Baseline Schedule Revision submittal(s) for consistency with DB Team's current accepted Project Baseline Schedule and for conformance with the DB Documents. Once a Project Baseline Schedule Revision is accepted by GDOT, it shall become the Project Baseline Schedule of record and be used as the basis for subsequent Project Schedule Update(s).**~~

2.3 Quality Management Requirements

2.3.1 Document Management

DB Team shall establish and maintain an electronic and hard copy document control system to store, catalog, and retrieve all Project related documents in a format that is accepted for use by GDOT. Unless otherwise directed by GDOT, record retention shall comply with the requirements included in the Retention Schedules for State Government Paper & Electronic Records, and the State Agency Specific Schedules for Department of Transportation, and shall be provided to GDOT at the time of the expiration or earlier termination of the DB Documents.

2.3.2 Quality Management Plan Submittal Requirements

DB Team shall submit a comprehensive Quality Management Plan (QMP) to GDOT for acceptance that conforms to the quality assurance procedures with provisions contained in GDOT's Quality Control and Quality Assurance Program and 23 Code of Federal Regulations (CFR) 637 Subpart B. The QMP shall be submitted to GDOT for review no later than thirty (30) days from NTP 1. All audits, findings and reports shall be provided to GDOT with all submittals.

2.3.3 Quality Management Plan Requirements

DB Team shall develop, implement, and maintain the QMP for the Term. The QMP shall describe the system, policies, and procedures that ensure the Work meets the requirements of the DB Documents and provides documented evidence of same.

The complete QMP shall encompass all Work performed by DB Team and Contractors of all tiers.

The QMP shall contain detailed procedures for DB Team's quality control and quality assurance activities. DB Team's quality process shall incorporate planned and systematic verifications and audits undertaken by an independent party. DB Team shall conduct all quality control, quality assurance, and design overlay and coordination among design disciplines, all in accordance with the QMP and the requirements of the DB Documents.

When required by GDOT Specifications and/or DB contract documents, inspections, reviews, and testing performed by the DB Team shall only be performed by entities prequalified by GDOT with training, qualifications, and certifications using equipment that is accurately calibrated and maintained in good operating condition at an AASHTO Materials Reference Laboratory (AMRL) (American Association of State Highway and Transportation Officials (AASHTO) R18, "Establishing and Implementing a Quality System for Construction Materials Testing Laboratories") accredited facility, or at a facility with comparable certification (e.g., International Organization for Standardization (ISO) 17025, "General Requirements for the Competence of Testing and Calibration Laboratories").

2.3.4 Quality Management Plan Structure

The DB Team shall organize the QMP as follows:

- **Project QMP** - a quality policy statement shall be provided which contains a complete description of the quality policies and objectives that the DB Team will implement throughout its organization. The policy shall demonstrate the DB Team senior management's commitment to implement and continually improve the quality management system for the Work. The QMP will also include policies, plans, processes and procedures for:
    - Organizational requirements with contact information of the DB Team's Organization as defined
    - Roles and responsibilities of the Quality Team
    - Administrative processes and procedures common to both design and construction quality management
    - Quality records management processes and procedures
    - A comprehensive noncompliance process

- **Design QMP** - including but not be limited to plans, processes and procedures for:
    - Design development including checking, peer review, cross-discipline coordination for developing Project plans, Project specifications and estimates with supporting technical documentation
    - Managing design reviews and changes during design and construction
    - Design Decision Making
    - Design communication, coordination, and collaboration
    - Managing GDOT Reviews and Responses to submittals, Work Change Directives, and Change Requests
    - Document control
    - Design and engineering support during construction, responding to Request For Information (RFI's) applications and field changes
    - Independent auditing of design quality management
    - Design criteria adherence
    - Non-compliance management

- **Construction Quality Management Plan (CQMP)** - including but not limited to plans, processes and procedures for:
    - Construction inspection, testing, management and administration (and party or personnel responsible for each activity: GDOT vs. DB Team)
    - Tracking, Measuring and documenting construction progress
    - Construction decision making
    - Ensuring that only the most up to date Released for Construction documents are be used
    - Plan/Protocols for inspection, testing and maintaining quality certifications
    - Managing reviews and responses to Construction Documentation (RFIs, Field Changes, Design Changes, Construction Changes, Claims, etc., during construction)
    - Managing and tracking accepted construction changes
    - Managing and controlling construction schedule
    - Construction communication, coordination, and collaboration
    - Environmental compliance
    - Non-compliance management

QMP forms and checklists are to be used to facilitate and document QA efforts including pre-work activity checklists that depict all items required to perform the particular design, construction and operational efforts, such as; means and methods, subcontractor involvement, materials and inspection / testing requirements.

The DB Team shall maintain construction workmanship and materials quality records of all inspections and tests performed per the approved CQMP. These records shall include factual evidence that the required inspections or tests have been performed by GDOT and its representative, including type and number of inspections or tests involved; results of inspections or tests; nature of defects, deviations, causes for rejection, etc.; proposed remedial action; and corrective actions taken. These records shall cover both conforming and defective or deficient features, and shall include a statement that all supplies and materials incorporated in the Work are in full compliance with the terms of the Contract Documents. These records shall be available for review and audit to GDOT inspectors.

2.3.5 Nonconformance Report (NCR) System

A Nonconformance Report (NCR) process shall be required to document, report and track Work that fails to conform to the requirements of the DB Documents. Examples of nonconformance's are: physical defects, test failures, incorrect or inadequate documentation or changes from the design processes, inspection or test procedures described in the Project QMP.

GDOT will implement a web-based management system that will have the capability for documenting and implementing the NCRs that includes the description of the NCR, corrective action, action to prevent, the defined roles, dispositions, tracking log, and Work flow states.

The Originator of the NCR indicates the description of the nonconforming Work and the applicable requirements, and assigns the NCR to the Responsible Organization for disposition.

The Responsible Organization gives a full description of the nature, date, location and any other pertinent facts, and also indicates the root cause, corrective actions, actions to prevent recurrence and provides a proposed disposition of the nonconforming Work that is the subject of the NCR, by the DB Team's Quality Manager (QM), the Engineer of Record (EOR), and GDOT. If the disposition is accepted by GDOT Authorized Representative, the Responsible Organization is notified of the final determination. Upon verification that the disposition has been performed, the NCR is closed. If the disposition is not accepted by GDOT, the NCR will remain opened until the disposition is accepted by GDOT.

2.3.5.1 Role Definitions and Order of Review

For purposes of Nonconformance Reporting, the following terms have the meaning and roles identified below:

- **Originator** – The entity which initiates and creates the NCR. The Originator can be the DB Team or GDOT. The Originator closes the NCR document once all requirements have been met. The NCR cannot be closed until the Responsible Organization's disposition is accepted by GDOT.
- **Responsible Organization** – The entity to whom the NCR is sent. The Responsible Organization is the entity directly responsible for the nonconforming Work on which the NCR was written and who is responsible for correcting the nonconforming Work and provides proposed disposition to resolve the NCR.
- **DB Team's Quality Manager (QM)** – The individual that is responsible for assuring quality of the Work. After the QM has reviewed the Responsible Organization's disposition, he forwards the NCR to the EOR, and the GDOT Authorized Representative.
- **Engineer of Record (EOR)** – The individual that is responsible for the design of the Work. The EOR must review, reject or approve all NCRs and supporting documents, subject to the GDOT Authorized Representative's determination of the accepted Design Documents. Any changes from the requirements of the DB Documents must be presented for acceptance as a Change Request. If the subject of the NCR is not related to a subject that would typically require a design professional's input, the EOR must note that the NCR is "not applicable".
- **GDOT** – GDOT must review and make a recommendation to reject or accept all dispositions and supporting documents.
- **GDOT Authorized Representative –** The individual authorized that is responsible for monitoring the NCR process.

2.3.5.2 Disposition Options

After the Originator of a NCR has activated an NCR, the Responsible Party provides a proposed disposition. Options available for the disposition are defined in the NCR as follows:

- **Reject** – The Work is unsuitable for its intended use, and incapable of being reworked or repaired to meet the specified requirements of the DB Documents.
- **Rework** – The deficiency can be brought into conformance with the DB Documents through re-machining, reassembling, reprocessing, reinstallation, or completion of the required operations.
    - Inspection is required after the rework is completed to verify the rework is satisfactory to the Originating Party.
- **Repair** – Action is required that will result in making the Work acceptable for its intended use, as determined by an engineering evaluation although the item might not meet all of the requirements of the DB Documents.
    - Inspection is required after the repair is completed to verify the repair is satisfactory to the Originating Party.
- **Accept-As-Is** – Allows the use of the Work completed that does not meet all requirements of the Design Document requirements, but it is determined by engineering evaluation that the Work will satisfy its intended use.

2.3.5.3 Corrective Action

In addition to the resolution of nonconformance on an individual basis the corrective action process will urgently recognize, report and resolve systemic and serious deficiencies, including:

- Repetitive NCRs that indicate inadequacies in either production process or inspections
- Issues of safety or conditions likely to have a significant effect on the Project
- Quality procedures not being carried out in a timely fashion

The Corrective Action mechanism will address the possibility that the personnel responsible for the relevant activity might be a primary cause of the deficiencies. Remedial action might involve additional training and in some cases removal of personnel from the activity and/or the Project.

2.3.5.4 Workflow States

The following workflow states are applicable to the NCR:

State	Description
Draft	Indicates that the NCR is being written.

Active	Indicates that the NCR has been submitted to the Responsible Organization to provide causes, corrective actions, actions to prevent recurrence and a disposition for the nonconforming Work.
Pending Review/Correction	Indicates that the Responsible Organization has responded with a disposition and the disposition is under review. The document is routed to appropriate parties for concurrence/acceptance of the disposition.
Pending Closure	Indicates that the nonconforming has been corrected and Responsible Organization is waiting for inspection/verification and closure.
Closed	Indicates that the nonconforming has been resolved satisfactorily and the NCR is closed.

2.3.6 Quality Management Updates

The DB Team shall regularly maintain the QMP to contain current versions of the following information:

- The organizational chart that identifies all quality management personnel, their roles, authorities and line reporting relationships.
- Description of the roles and responsibilities of all quality management personnel and those who have the authority to stop Work
- Identification of testing agencies, including information on each agency's capability to provide the specific services required for the Work, certifications held, equipment and location of laboratories.

2.3.7 Responsibility and Authority of DB Team Staff

Personnel assigned to perform inspection, testing, or monitoring of characteristics for quality control shall not be those personnel performing or directly supervising the Work being accepted. The DB Team's QM and quality control staff shall have no responsibilities in the production of the Work.

The QM shall prepare a monthly report of the quality inspections and tests performed, results of such inspections and tests, and occurrences and resolution of non-conformance discoveries. The DB Team shall submit the monthly reports to GDOT for review.

The DB Team's QM, quality assurance manager, and quality control manager(s) shall have the authority to stop Work for quality-related issues.

2.3.8 Design Quality Management Plan

It shall be the DB Team's sole responsibility to provide Project plans, drawings, and specifications of such a nature to deliver the finished construction Work in accordance with all DB Documents requirements. GDOT comments pertaining to design documents shall not relieve the DB Team of that responsibility. The DB Team shall not begin Construction Work until all GDOT comments on the design submittal are resolved to the satisfaction of GDOT and the plan is accepted.

The DB Team shall assign a Design Manager that shall be responsible for the supervision and quality of all Design Work and design processes, including but not limited to each of the following:

- Accuracy
- Adequacy
- Conformance to professional standards of practice
- Compliance with all legal requirements and standards mandated by the DB Documents
- Quality

The DB Team shall provide independent design checks by independent design review. Independent design reviews are to be performed and documented per the process defined in the DB Team Design QMP and completed prior to any submittal to GDOT.

Elements of the Design QMP process are:

- **Design Workshop** - Within fifteen (15) days of NTP 1, the DB Team shall arrange a design workshop which will be attended by the Designer's personnel, GDOT, and any invited participants of the Project. The purpose will be to familiarize involved personnel with the design concepts, issues, status, and review procedures. The DB Team and GDOT will jointly develop the agenda of the workshop and how it will be organized (i.e., by GDOT department and engineering discipline). Consensus will be determined during the Design Workshop on the use of Interim Design reviews for facility elements that pose complex or entail additional conflict resolution effort, if applicable. The workshop will also discuss the extent of GDOT reviews. The intent of the workshop is to make the subsequent Design Reviews more effective and efficient for all parties.

- **ITS and Toll System Design Workshop(s) (For Toll Projects Only)** - After roadway geometry is established, but before beginning design efforts for the prototype toll-related ITS, ITS and tolling design plans, the DB Team shall arrange an ITS and Toll System Design Workshop which shall be attended by the DB Team's Design EOR for each of the key disciplines (including but not limited to ITS, Electrical, Structural, Mechanical) for the Tolling Plans / tolling components, GDOT, State Road and Tollway Authority (SRTA), and any invited participants of the Project. If the DB Team's Design EOR for each of the key disciplines (including but not limited to ITS, Electrical, Structural, Mechanical) for the Tolling Plans / tolling components is not the same, in other words multiple

design teams are being utilized concurrently by the DB Team, then all are required to attend for the purpose of consistency in design.

The purpose of this workshop will be to commence coordination with SRTA on design elements related to the tolling components. The DB Team and SRTA will jointly develop the agenda of the workshop and location. The required prototype submittals locations will be selected based upon coordination at this workshop. Consensus will be determined during the Design Workshop on when best to schedule the second Toll Design workshop for tolling elements that pose complex site specific constraints or entail additional conflict resolution effort. Additional workshops may be scheduled at the consensus of the DB Team, GDOT, and SRTA as needed.

- **Design Review Quality Plan -** The Design Review Quality Plan shall be part of the QMP and be submitted for GDOT review and acceptance within thirty (30) Days from NTP 1. No design submittals shall be provided until the Design Review Quality Plan is accepted by GDOT. The Design Review Quality Plan shall include both the quality responsibilities of the Design Manager and the independent responsibilities of the QM. The Design Review Quality Plan shall be specific to each stage of design development. The DB Team shall make a single independent comprehensive design check and design review for every submittal. The DB Team shall provide plans in accordance with the Plan Development Process (PDP), Electronic Data Guidelines (EDG) and the Plan Presentation Guide (PPG) and Manuals for GDOT reviews. Any change of software versions from the Technical Provisions used in producing the plans will be allow under the condition that the DB Team provides any software, access to software licenses, and training for use of the proposed software. The Design Review Quality Plan stages of design development per the accepted Construction Phasing Plan (see Section 23) are:
    - Preliminary Plans for the entire Project (See Section 23).
    - Final Plans for the Construction Phase Submittals (see Section 23).
    - Final Plans (Complete Set) for the accepted Construction Phase.
    - As builts.

  The DB Team may choose to submit certain drawings for facilitating better communication with GDOT. Interim Design reviews are intended to resolve conflicts and unresolved comments after the Preliminary Plans have been accepted but prior to Final Plan submittals.

- **Independent Design Checks** - The DB Team shall ensure that independent design checks are carried out by an Independent Design Reviewer not involved in the production of the design being reviewed. Those performing the checks should have equal or greater qualifications and experience as the EOR for the design being checked. The DB Team shall provide to GDOT a plan / process and written procedures for this Independent Design Check. Independent design review shall be provided for each and every design submittal prior to being

submitted to GDOT. The DB Team, when requested by GDOT, shall promptly provide access to all comments and comment responses between the DB Teams EOR and the Independent Design Reviewer for each submittal review.

Independent design checks are comprised of design assessment and analytical checks as follows:

- Design Assessment – is a review of general compliance with the requirements of the DB Documents, taking into consideration the following areas:
  - Project design criteria;
  - Applicable codes and standards;
  - Methods of analysis;
  - Computer software and its validation;
  - Interface requirements;
  - Materials and material properties;
  - Durability requirements;
  - Constructability;
  - Context Sensitivity; and
  - Environmental Compliance.
  - Any required Design Exceptions and/or Variances.

  All Design Exceptions and Design Variances as required from specified standards shall be provided by the DB Team, stating why exceptions or variances are being proposed with supporting documentation and shall be submitted prior to GDOT and FHWA as appropriate for review and acceptance. All Design Exceptions and Design Variances shall be submitted and accepted prior to the Preliminary Plan submittal.

- Analytical Check – using separate calculations (and without reference to Designer's calculations) to establish the structural adequacy and integrity of critical structural members. This includes, but not limited to the following:
  - Structural geometry and modeling;
  - Material properties;
  - Member properties;
  - Loading intensities;
  - Foundation loads; and
  - Structural boundary conditions

- **Changes Subsequent to Review -** If design is amended subsequent to the design review and acceptance by GDOT, the DB Team shall re-check and re-certify the design as an additional design review. Substantive changes to plans and specifications initiated by the DB Team and already checked by the Design Manager and certified by the QM shall be subjected to the Design Review process as an entirely new design.

- **Design Reviews -** Design review meetings and participation – Design reviews and meetings shall be conducted by the DB Team's Design Manager. The QMager, the Design Manager, EOR, DB Team's Independent Design Reviewer, and any Design Professionals having significant input into the design or review shall be present. The DB Team shall notify and invite GDOT to participate in all design reviews. At a minimum, the Design Manager shall organize and facilitate design review kick off workshop with GDOT no later than thirty (30) days of NTP 1 to discuss design submittals. Thereafter, design review meetings shall be scheduled monthly until all submittals have been accepted or to the frequency determined by GDOT to ensure process and success is obtained for all design reviews. GDOT may also invite additional stakeholders to attend. GDOT's participation in design reviews shall not relieve the DB Team of its responsibility for the satisfactory completion of the Work in accordance with all requirements of the DB Documents.

  The DB Team's Design Manager shall provide the agenda of the meeting in advance of the meetings and provide a detailed summary status of all submittals provided to GDOT for their review. The detailed summary status list at a minimum shall provide date submitted, to whom, contractual required review period, total days in submission, date accepted, and comments.

  The DB Team shall provide or make available to review meeting participants all design documents (e.g., drawings, reports, specifications, basis of design memorandums and other technical memorandums as necessary to support design decisions) pertinent to the design review, including all prior comments and actions resulting there from. The DB Team shall prepare and distribute minutes from the review meetings. Design Reviews shall be conducted for the following:
  - Preliminary Plans submittal shall be the first design review meeting requiring participation of GDOT and is intended to verify that the concepts proposed by the DB Team comply with the requirements of the DB Documents. The QM shall verify in writing the compliance and completeness of the design submittal prior to presenting the Preliminary Plans to GDOT for review. The following issues shall be discussed:
    - All requirements of the DB Documents applicable to the proposed concept documents, including all applicable standards and legal requirements and environmental permit conditions, have been identified, and the proposed designs are in compliance.
    - The proposed concepts are substantiated and justified by adequate site investigation and analysis.
    - Right of way requirements have been identified and any changes to the proposed Right of Way (ROW) have been addressed for GDOT to maintain and operate the Project after Final Acceptance.
    - The proposed concepts are constructible.
    - Required materials and equipment are available.
    - The proposed concepts meet all quality requirements, and all required QMP procedures have been followed including for site

maps and concept drawings and draft specifications for any materials or methods that are not industry standard.
    - That proposed concepts comply with permits and environmental compliance plan requirements.
    - All Design Exceptions and Variances accepted.
- Optional limited Interim Design reviews are intended to resolve conflicts and unresolved comments after the Preliminary Plans have been accepted but prior to Final Plans. The DB Team should use Interim Design Reviews to remedy conflicts, account for exceptions, and incorporate betterments. The DB Team shall notify GDOT if Interim Design reviews are necessary and shall schedule the necessary design reviews. Workshops, meetings and "over-the-shoulder" reviews are means to facilitate Interim Design reviews by GDOT.
- The DB Team may also use Interim Design reviews to verify that the concepts and parameters established and represented by Preliminary Plans are being followed, and that all requirements of the DB Documents continue to be met. The DB Team shall specifically highlight, check, and bring to the attention of GDOT any information differing from or supplemented to that presented at the Preliminary Plan review.
- Final Plan reviews shall verify that the concepts and parameters established and represented by Preliminary Plans and any Interim Designs are being followed and that all Agreement requirements continue to be met. The DB Team shall specifically highlight, check, and bring to the attention of GDOT any information differing from or supplemental to that presented previously. Prior to scheduling the Final Plan review with GDOT, the QM's independent review shall have been completed.
- The DB Team shall be responsible for demonstrating that any proposed specifications meet or exceed the minimum DB Documents and permit requirements. GDOT shall have final determination at its sole discretion that these requirements are being met and that the specifications are suitable and appropriate to control the Work.
- Temporary work design reviews, except where public safety might be affected, are the responsibility of the DB Team to assure conformance with the Final Plansand specifications and in accordance with the DB Documents. The DB Team shall verify pertinent dimensions in the field prior to conducting a temporary works plan review. The DB Team shall check, review, and certify temporary works designs prior to their use in fabrication and/or construction.
- The review of as-built record documents shall be performed initially by the DB Team to assure "red-lines" and authorized changes to the Final Plans are properly notated on the record plans and specifications, and that quality documents and facility records indicating variances or changes have been reflected on the plans and specifications. Once the DB Team has completed their review the as-built records are to be submitted to GDOT for review and acceptance.

- Design quality records shall be maintained by the DB Team in an auditable format according to the QMP procedures. GDOT has the right to audit the quality records for compliance with the QMP and the DB Documents requirements. Upon completion of the Project, the Quality Records are turned over to GDOT.

2.3.9 Record Drawings and Documentation

Within 30 days of Substantial Completion and prior to Maintenance Acceptance, the DB Team shall submit to GDOT a complete set of Record or As-Built drawings for all the Construction Phases of the Project. The Record Drawings and documentation shall be an organized, complete record of Plans and supporting calculations and details that accurately represent what the DB Team constructed. The DB Team shall ensure that the Record Drawings reflect the actual condition of the constructed Work.

Record Drawings shall be submitted in hard copy and electronic format for the portion of the Project actually opened to traffic. Refer to Section 23 of Volume 2 for submittal requirements. The DB Team shall include a signed statement ensuring that the Record Drawings reflect the actual condition of the constructed Work.

2.4 Requirements for GDOT Office and Equipment

Refer to Volume 2

2.5 Web-Based Project Management Program

GDOT will implement a project web-based management website throughout the term of the project for file storage, communication, and correspondence. This web-based management website is e-Builder.net. The DB Team is required to access and use the web-based project management system provided by GDOT.

This system provides all project team members:

- Simplification of communications
- Automated tracking of time-sensitive information
- Automated reporting
- Common document storage and management audit trail of information
- Secure, real-time 24/7 access and exchange of information

All project team members shall be required to use this system for all official project communications and interactions, including:

- Correspondence
- QMP and submittals
- Issues
- Meetings
- Design Management
- RFIs (Requests for Information)
- Submittals
- Schedule submittals
- Nonconformance reporting (NCR's)
- Punch Lists
- Reporting
- Document Management (see table below for the required File Naming Convention)
- Construction Drawing Management (including management markups, versions and revisions)
- Project Archiving and Closeout
- As-Built Drawing Management
- Conformance to Web-Based System

All project team members shall use the web-based project management system on a daily basis to perform their project responsibilities in a timely manner.

Additional requirements/guidelines of the system:

- The web-based system shall be used to track and manage the Project and will be an official record of all project communication. Organizations shall post key project-related information to the system. GDOT shall provide a system that will at a minimum provide a shared interface for: meeting minutes, Requests for Information (RFIs), general correspondence / transmittals, Punch List, NCRs, inspection logs and reports, management audit logs and reports, and Submittals including schedule updates and schedule revisions.
- No later than thirty (30) calendar days after NTP 1, all project team organizations involved shall designate a web-based project management system coordinator (an internal point of contact) and provide coordinator's name, phone and e-mail to GDOT and DB Team.
- All users of this web-based project management system must complete training prior to having access to the system. GDOT will provide this training.
- All project team members will be solely responsible for establishing and furnishing high-speed internet connectivity (T1, cable modem, or DSL connectivity is recommended) to access the web-based project management system.
- Submittals must be made, tracked, and reviewed via the system. In the case where physical samples are required, the submittal will still be reviewed and tracked via the system. The sample itself will be transmitted to the reviewer via traditional means.

- The DB Team and GDOT shall utilize the filing naming convention as provided in the table below.

All Submittals shall be provided to the web-based project management system. Project documents shall comply with the naming convention requirements of GDOT's Electronic Data Guidelines (EDG). When not specified in the EDG, project documents transmitted via the system must comply with the following electronic formats:

- Documents generated in Computer Aided Design (CAD) applications (Microtation V8 or InRoads) shall be submitted in Portable Document Format (PDF) generated by a PDF writer from the CAD application.
- Documents that are marked up or unavailable in electronic format (drawings, sketches, correspondence, etc. generated by hand drafting methods) shall be scanned to Tagged Image Format version 5 or 6 [TIFF 5 or 6 (.TIF)], Bitonal [or Black and White (a.k.a. Line Art), on some scanners] (.tif) or PDF (.pdf), black and white with a resolution of 200 dpi using CCITT Group 4 (2d Fax) compression.
- Documents that have been generated using PDF printer drivers (not scanned) shall be submitted via the system.
- Electronic photographs shall be submitted in Joint Photographic Experts Group (JPEG) (.jpg) file format, sized at a minimum resolution of 1024x768 pixels.
- Grayscale or color photo images that are scanned shall be saved in JPEG (.jpg) file format with medium to low quality compression at a resolution of 200 dpi.
- Product data that is available for download from the manufacturer's website that has been generated using PDF printer drivers (not scanned) may also be submitted via the System.

File Naming Convention

The following file naming convention shall be used on all correspondence created or issued by the project and for filing any document.

PI_Date_File Type ID_File Name

All FINAL versions of documents to be saved in the "**Final Deliverables**" folder as follows:

PI_Date_File Type ID_File Name (Final)

Date will be represented in **YYYY-MM-DD** format; using two digits for the month and the date and four digits for the year. For example, July 4, 1776 will be represented as 1776-07-04.

You may use "versions" or "drafts" included in the file name portion of the naming convention for the non-final document.

File Type Indenitification Table

File Type ID	*File Type*	*File Type*
AB	As-Builts	
AC	Accidents	
AD	Advertisement	Advertisements to the public, such as advertisement for intent to post RFQ (NOI), advertisements for public meetings (PIOH & PHOH), etc.
AP	Acceptances	
AUD	Document Audit	
BND	Bond Related	All bond related items.
CAL	Calculations	
CI	Contractor Invoices	
CL	Claims	
CM	Construction Management Related	
CO	Change Order Documents	
COM	Comments	
COR	Correspondence	Not to be used for letters (see LTR) and memorandums (see MEM).
CR	Construction Reports	Construction reports of any frequency; the name of the file will clarify frequency of reporting/
CST	Cost Estimate	
CT	Contract Document, RFP, RFQ	
DBE	Disadvantaged Business Enterprise	
DW	Drawing	Examples: PDF of CAD drawings.
EEO	Equal Employment Opportunity	
EM	E-Mail	Emails are NOT considered deliverables, this is for record keeping purposes.
ENV	Environmental	All NEPA/GEPA related files and documents, including special studies.
FAX	Facsimile	
FP	Financial Plan	
INS	Insurance Related	All insurance related items.
IGA	Intergovernmental Agreements	

File Type ID	*File Type*	*File Type*
ISS	Issues	Design related issues and request for information.
LCR	Lane Closure Requests	
LD	Liquidated Damages	
LOG	Log	
LTR	Letter	
MA	Meeting Agenda	
MAT	Materials Related	
MDR	Materials Deficiency Reports	
MEM	Memorandum	To be used for correspondence with "memorandum" in the subject line.
MM	Meeting Minutes	
MOT	Maintenance of Traffic	
MP	Project Master Plans, Planning Documents	
MSC	Miscellaneous	
MSI	Meeting Minutes Sign-In Sheet	
MUN	Municipal	
NCR	Nonconformance Report	
NOI	Notice of Intent	Environmental related NOIs.
NTF	Note to File	
NTP	Notice to Proceed	
OM	Operation & Maintenance	
PCR	Project Change Request Document	
PDI	Product Data and Information	Examples: bottomless culvert product catalog, guardrail beam information, etc.
PER	Permit Related	
PIX	Photos	
PL	Punch List	
PM	Project Management	All project management related documents and files.
PP	Program Procedure	

File Type ID	*File Type*	*File Type*
PPM	Policies and Procedures Manual	
PS	Plan Specification(s)	
PST	Presentation	PowerPoint and other types of presentations; not to be used for animations (see VID)
PT	Permit	
PUB	Public Involvement	To be used for all outreach related documents and files, including stakeholder, industry, agency and legislator outreach
QA	Quality Assurance	
QC	Quality Control	
REG	Regulatory Agencies	To be used for documents and guidelines published by regulatory agencies; NOT to be used for permit related files and documents (see PT).
RES	Research	
REV	Plan Revisions	
RFI	Request for Information	Construction related issues and request for information.
RFP	Request for Proposal	
RFQ	Request for Qualifications	
ROW	Right of Way	
RP	Report (All Technical Reports)	All technical analyses, studies, whitepapers, etc.; EXCEPT environmental related documents and files (see ENV).
SCH	Schedule	
SDW	Shop Drawing	
SP	Specification/Special Provision	
SR	Status reports, progress reports	The name of the file needs to clarify type and frequency of reports.
SRV	Submittal Review	NOT to be used for plan revisions (see REV).
STD	Project Standards	
SUB	Subcontractors	
SUR	Survey	Land survey information and documents, not question surveys
TE	Time Extension	
TRF	Traffic Related	

File Type ID	*File Type*	*File Type*
TX	Transmittal	
UTL	Utility	
VID	Video	Animations; daily videos of construction sites
WAR	Warranty Related	All warranty related items

3 RESERVED

4 ENVIRONMENTAL

4.1 General Requirements

The DB Team shall comply with all environmental laws, regulations, and policies set forth by the federal, state, and local agencies with jurisdiction over the construction activities associated with the Design-Build Project as described in the approved environmental document and permits. The DB Team shall follow all pertinent policies and procedures as described in the 23 Code of Federal Regulations (CFR) 771, O.C.G.A. 12-16-1 and GDOT - Environmental Procedures Manual. The DB Team shall be responsible for coordination with GDOT, and if required FHWA to ensure that commitments made during the environmental review are being met. Any changes to the Project as described in the approved NEPA/GEPA document shall require the DB Team to reassess impacts. This may require resubmittal of environmental studies for approval by applicable agencies. The DB Team cannot complete the National Environmental Policy Act (NEPA) document or reevaluation. GDOT shall be responsible for completing and resubmitting NEPA documentation.

The DB Team shall execute the Environmental Commitments required by the, approved NEPA document, DB Documents Governmental Entities, Governmental Approvals, and all applicable federal and state laws and regulations.

The DB Team's obligation regarding Governmental Approvals and laws, including environmental laws and regulations, and the DB Team's obligation for environmental compliance is set forth in Volume 2, Section 4.1. Limits of the Project and Proposed Right of Way will be described in the approved environmental document.

The DB Team shall cause Work to comply with approved the approved environmental document, permits, and compliance requirements for any additional actions throughout the Term of the Agreement. The DB Team shall monitor and document Work activities so that documents providing evidence for compliance are available to FHWA (as applicable) and GDOT for inspection at any time. Evidence of compliance activities may include photo documentation and other appropriate methods to demonstrate compliance. The DB Team shall execute the environmental mitigation plan, which lists responsible parties for environmental commitments detailed in the NEPA/GEPA Approval documentation as agreed on by FHWA and/or GDOT.

The DB Team will commit to explore the use of environmentally sustainable practices and/or materials in the development of the Project.

If the NEPA document has not yet been approved, the alternative is not "selected"; therefore, the "No-Build" option is still a viable alternative for the Project.

If the "No-Build" alterative is selected, the Project will be terminated according to Article 19 of the Design-Build Agreement.

4.2 Environmental Approvals

4.2.1 Responsibilities Regarding Environmental Studies

Environmental documents shall be prepared and approved prior to the contract award. Such approvals may require re-evaluation, amendment, or supplement as the Work progresses or in order to accommodate actions not identified in the approved environmental document or covered specifically by existing resource agency coordination and permits. On behalf of GDOT, the DB Team shall be responsible to validate, provide design information to support additional environmental studies (cultural resources, ecology, aquatics, noise, and/or air) conducted by GDOT or on behalf of GDOT by others, as appropriate and requested by GDOT, and comply with the Environmental Commitments identified in the approved environmental document. The DB Team shall follow GDOT policies and procedures when conducting these activities for the Project.

Changes proposed by the DB Team to the Schematic Plan of Project, incorporation of Additional Properties or changes to the dimensions of the right of way of the Project, or changes to the Environmental Commitments previously accepted by GDOT may require new environmental studies subject to approval by environmental resource agencies. In order for GDOT and FHWA (as applicable) to determine if the project can advance, current design plans must be provided by the DB Team to support environmental impact analysis. The DB Team shall facilitate a meeting with GDOT within 45 days of NTP 1 to discuss potential deviations from the approved environmental document. The following terms define GDOT and/or FHWA required documentation needed to assess impacts to the approved environmental document:

- **No Change Reevaluation:** No design or regulatory changes have occurred since the last approved environmental document.

- **Change Reevaluation (design modifications):** There have been design modifications to the most current plan set since the last approved environmental document; the project corridor in the area of the changes (or as applicable) must be considered for additional or reduced impacts. There may be a need for additional agency coordination as result of the design changes.

- **Change Reevaluation (regulatory/policy changes):** Changes in law or regulatory practice may require additional survey or technical analysis, environmental condition changes over time, and associated agency coordination. The additional analysis may be required regardless of design changes, construction staging, etc. (There may be no action taken by the design team that would trigger the additional technical analysis).

The DB Team cannot complete the NEPA Approval document or reevaluation because of conflicts of interest due to financial interests in the outcome of the NEPA Approval (23

CFR Ch 1, Section 636.109(b)(6)). GDOT shall be responsible for preparing the NEPA document.

The DB Team will be responsible for ensuring compliance with the conditions and schedules set forth in amendments to any approved environmental document due to changes to the Schematic Plan of the Project.

The DB Team shall assume all schedule risk for all required environmental studies and re-evaluations not identified in the approved environmental document due to Project changes proposed by the DB Team and shall be responsible to provide design information to support any additional studies, and comply with all such GDOT policies and procedures and Governmental Entities having jurisdiction over the Project. GDOT shall be responsible for all coordination of environmental studies with appropriate Governmental Entities. The DB Team is responsible to provide GDOT with the necessary information as requested for coordination with Governmental Entities.

The approval time frames for NEPA/GEPA documentation and environmental studies are listed in Table 4-1 and 4-2. The Tables below do not include any required public comment period and responding to the public comments. GDOT shall be responsible for the NEPA/GEPA Reevaluation and studies as provided in Table 4-1 and 4-2. GDOT will coordinate and provide approved documentation to the appropriate Governmental Entities. The review and issuance time periods listed in Table 4-1 and 4-2 do not include the time frame for GDOT approval prior to submission to the appropriate Governmental Entity. GDOT reserves the right to request to revisions as needed to meet Governmental Entity approval.

Table 4-1 GDOT Led NEPA Approval

NEPA Document*	Governmental Entity Approval Time Frame	Reviewing Governmental Entity
NEPA Approval Reevaluation	30 days	FHWA
Ecology Report Addendum	45 days	FHWA (if project has a formal Section 7)
Assessment of Effects Addendum	45 days	State Historic Preservation Office (SHPO)
Noise Report Addendum	21 days	FHWA

Air Quality Report Addendum	45 days	GDOT
Traffic Report Addendum	45 days	GDOT or FHWA (per PoDI Agreement)

* Pursuant to Moving Ahead with Progress in the 21th Century (MAP-21), the FHWA intends to publish a notice in the Federal Register following NEPA Approval and the Section 404 permit, as applicable. If such a notice is published, claims seeking judicial review of this federal action will be barred unless such claims are filed within one hundred and fifty (150) days after the publication date of the Federal Register notice for each federal action (e.g. NEPA Approval and/or Section 404 permit). At minimum, the period of time may only be limited by the Administrative Procedures Act of 1946 (APA) (5 United States Code [USC] Section § 701-06).

4.2.2 GDOT Review and Approval of Environmental Permits

The DB Team shall be responsible for preparing required permits and permit modifications as stated in Table 4-2. The DB Team is responsible to obtain all other permits not included in Table 4-2 to meet the requirements of the Agreement. GDOT will be responsible for reviewing the permits and permit modifications and submitting to the appropriate Governmental Entities, unless the applicant is listed as the DB Team. Documentation not meeting current submission standards or requirements of Governmental Entities will be returned to GDOT, and shall be revised by the independent consultant at DB Team's cost. GDOT reserves the right to review, comment on, require revisions to, and reject for resubmission documentation submitted to GDOT by the consultant or the DB Team for environmental compliance or approval. The agency review time frame for permits is specified in Table 4-2. The review and issuance time periods listed in Table 4-2 for GDOT-Led Approvals do not apply to any revisions of the new permit applications proposed by the DB Team's "Schematic Plan of Project".

Table 4-2 GDOT-Led Environmental Permit Approval

Permit Required	Agency Review and Issuance Time Period (Calendar Days)**	Listed Applicant	Preparer of Application
United States Army Corps of Engineers (USACE) Section 404 Nationwide Permit	120	GDOT	DB Team
USACE Section 404 Regional Permit	120	GDOT	DB Team
Subsurface testing of all Underground Storage Tanks	150	GDOT	DB Team

Permit Required	Agency Review and Issuance Time Period (Calendar Days)**	Listed Applicant	Preparer of Application
and Hazardous Materials			
NPDES Construction General Permit (GAR1000002), Notice of Intent	90	DB Team	DB Team
NPDES Construction General Permit (GAR1000003), Notice of Intent	90	DB Team	DB Team
NPDES Construction General Permit (GAR 150000), Notice of Termination	90	DB Team	DB Team
Georgia Stream Buffer Variance	150	GDOT	DB Team
USACE Section 404 Individual Permit	365	GDOT	GDOT prior to NTP 1 (contingent approval)
USACE Section 404 Individual Permit	60 ***	GDOT	DB Team after NTP 1 (final approval)

** The review and issuance time periods shall commence once a completed permit package that complies with the requirements of the DB Documents is accepted by GDOT, submitted to the issuing agency and end once the permit is issued by the appropriate Governmental Entity. Therefore, the DB Team shall schedule several review periods to ensure proper planning to accomplish the entire process for each required permit. Each GDOT review period is thirty (30) Days. Should the Submittal not be complete or rejected as provided in Section 23, each subsequent review period shall be thirty (30) Days, and is excluded from the timeframe in Table 4-2 above.

*** The approval time frame does not include modifications related to design involving Section 404 resources or impacts to the Section 404 resources. The approval time frame is for no changes to the contingent approval of the Individual Permit application.

The above permits and review times do not contemplate offsite plant or other offsite activity that DB Team may propose for use in construction or other non-permanent construction.

4.3 Required Submittals

The DB Team will be required to provide Submittals in accordance with the DB Documents..

5 RIGHT OF WAY (ROW)

5.1 General Requirements

This section sets forth the activities assigned to the DB Team, including pre-acquisition and acquisition activities, and designates which activities GDOT will conduct. This section also sets forth the requirements applicable to the work assigned to the DB Team related to the acquisition of ROW. DB Team to provide all services necessary to acquire title to the ROW, in form and substance acceptable to GDOT, in the name of the Georgia Department of Transportation; relocation of displacees; and clearance/demolition of the improvements from the ROW, as more fully described in the following sub-sections.

The DB Team's ROW staff and/or DB Team will function as independent contractors while acquiring the ROW.

5.2 Administrative Requirements

ROW shall be acquired in accordance with State and/or Federal Laws (depending on fund source) and in conformance to FHWA and/or GDOT policies, procedures, and guidelines (depending on fund source).

Pursuant to the applicable State and/or Federal regulations, the DB Team shall:

- Acquire ROW parcels for the Project on behalf of GDOT subject to GDOT's rights of review, approval, and audit;
- Maintain adequate access to all properties at all times, or until relocation is completed
- Maintain Utility service to occupied properties at all times, or until relocation is completed.

DB Team shall maintain a complete and current set of approved ROW plans for public use.

GDOT will either provide the DB Team any GDOT forms referenced in this section, or make them available upon request.

All ROW activities shall be completed and documented in compliance with all applicable State and/or Federal Laws, including the Uniform Relocation Assistance and Real Property Acquisition Policies Act of 1970 (Uniform Relocation Act), and the rules and regulations implementing the Uniform Relocation Act.

In the event the DB Team does not follow the provisions of 49 CFR Part 24 of the Uniform Relocation and Real Property Acquisition Act of 1970 (The Uniform Act) in the performance of the acquisition and/or relocation processes for the project, fails to obtain

or create any necessary written documentation in the right of way parcel file(s) or violates any requirements of the Uniform Act that results in the project losing federal funding on a parcel(s) or the project in general, the DB Team shall be responsible for any and all such loss of federal funds and all expenses determined to be ineligible for federal reimbursement due to DB Team's failure to comply with the provisions of the Uniform Act (This is applicable to Federal-Aid Design-Build projects).

5.3 DB Team's ROW Scope of Services

DB Team shall complete all administrative activities and prepare all documentation sufficient for DB Team to acquire the ROW.

Upon DB Team request to GDOT, GDOT will request that the Office of Attorney General assign an approved Special Assistant to the Attorney General (SAAG) to conduct the title work, closings, condemnations, and any related legal activities.

DB Team shall not, without prior approval, initiate negotiations of the ROW until the ROW plans for the applicable constructible segment have been approved by GDOT, and the constructible segment has environmental clearance.

DB Team shall not exceed 10% in condemnations of the total parcels required for the Project, without prior written approval from GDOT.

If DB Team and the landowner cannot negotiate a settlement, acceptable to GDOT, then GDOT will enter into an administrative review process with the property owner. Only after a reasonable settlement with a property owner cannot be reached through an administrative review, then acquisition of the property through eminent domain may commence. DB Team shall not be permitted to commence any condemnation action through the statutory "Declaration of Taking" on behalf of GDOT.

DB Team shall not begin construction on any parcel of real estate unless property rights for the parcel have been obtained and recorded in favor of GDOT and possession has occurred. ROW possession may be by use of Right of Entry (ROE) as may be granted by governmental agencies, and/or public utility owned companies, and as approved only by GDOT on a case-by-case basis.

The DB Team shall provide condemnation support for 12 months after filling of petition but not to exceed Final Acceptance.

The ROW Project Manager (ROW PM) shall be responsible for ensuring that the required ROW is free of obstructions prior to construction commencing on any segment of the Project.

5.4 Responsibilities of DB Team

DB Team shall be responsible for the costs of services and preparation of documentation for ROW acquisition, related relocation assistance for the Project, and

property demolition and removal. The work related to ROW acquisition includes, but is not limited to ROW plan development, surveying, environmental assessment, testing and remediation, appraisal, other necessary valuation or damage impact studies, conceptual stage study, negotiations, acquisitions, closing package preparations, court coordination services, and condemnation petition preparations. The DB Team shall also be responsible for relocation advisory assistance, as well as demolition or removal of obstructions within required ROW in compliance with all applicable State and/or Federal laws.

The DB Team entering into negotiations with a property owner to use their property outside of the ROW acquisition limits for mobile work trailers, storage, equipment, etc. will be strictly between the DB Team and the property owner and is to in no way to affect the negotiations of any parcel acquisition required for the Project. GDOT shall not be obligated to exercise its power of eminent domain in connection with DB Team's acquisition of any such temporary right or interest, and GDOT shall have no obligations or responsibilities with respect to the acquisition, maintenance or disposition of such temporary rights or interests.

5.5 Responsibilities of GDOT

GDOT will have the following responsibilities in connection with acquisition of ROW:

- Just and adequate compensation (i.e. negotiated settlements, condemnation jury awards).
- Provide final approval, where final approval is warranted, for all negotiation settlements, and relocation assistance payments.
- GDOT will provide a staff ROW oversight manager and/or Administrative Review Officer to serve as first point of contact, and who will be responsible for approving all negotiated settlements.
- Provide payment for SAAG services and necessary expert witnesses.

5.6 GDOT Project Monitor/Reviewer

In addition to GDOT's review and approval authority, the DB Team's ROW PM will audit, review and pre-approve all negotiations, files, settlements, etc. GDOT General Office staff will be the only authorized persons allowed to sign the Option Agreements and any Counter Offer Settlements.

5.7 Responsibilities of the Office of the Attorney General

The parties hereto acknowledge the statutory requirements that the Attorney General of the State of Georgia has exclusive authority to represent and defend GDOT, through the appointed SAAG. In its role as attorney for GDOT, the SAAG has the responsibility to:

- Represent GDOT in all condemnation and eviction proceedings

- Coordination with GDOT on all legal matters concerning acquisition processes, including all negotiated legal settlements
- Analyze recommended parcel values and/or appraisal issues
- Provide additional legal advice and opinions as needed by GDOT
- Jury trials including determination of expert witnesses and all appeals
- Preparation, obtaining, and filing of all necessary legal documentation for eviction of property owners or tenants.
- Prepare preliminary and final title opinions
- Conduct closings within 90 days

5.8 ROW Acquisition Plan

DB Team shall prepare a ROW Acquisition Plan within 30 days of NTP1. The ROW Acquisition Plan shall set forth DB Team's organization including names, titles and qualifications of Key Personnel and other ROW personnel, integration of the ROW schedule into the Project schedule, interface between design and ROW activities, documentation and reporting, quality control procedures and quality review standards.

The ROW Acquisition Plan shall contain the following:

Identify personnel and provide a copy of the GDOT Office of ROW certification of the proposed ROW PM, appraisers, other valuation experts, relocation negotiation agents, relocation benefits specialist, pre-acquisition agent, conceptual stage study preparer, condemnation court coordinator, condemnation petition preparer, property manager (Asbestos Inspector, Asbestos Abatement, Demolition, and UST Removal), negotiators, and any additional ROW personnel whose services will be required. All of the above must be in good standing with GDOT Office of ROW.

All ROW personnel used on this project must be certified by the GDOT Office of ROW for the appropriate level for the scope of work being performed.

The ROW Acquisition Plan shall establish the specific means by which DB Team will:

- Provide sufficient prequalified personnel (including an organizational chart) to achieve, in accordance with the Project schedule, the goals and milestones established for ROW acquisition, relocation assistance, appraisals, and clearance/demolition of the improvements from the ROW.
- Provide relocation advisory assistance such as finding replacement properties, and offering special assistance, including ADA requirements, if applicable.
- Provide administrative support.
- Provide a Conceptual Stage Study, if applicable.
- Provide translation for foreign language, visually impaired, or hearing impaired, as necessary.

- Provide documentation and reports.
- Procure, distribute and explain GDOT acquisition and relocation brochures as approved by GDOT and/or FHWA.
- Establish, implement, and maintain quality control procedures and quality review standards for the acquisition for ROW; prevent fraud, waste, and mismanagement.
- Provide constructible segments plan

DB Team shall update the constructible segments plan including the organization chart whenever changes in the Plan occur.

5.9 Schedule and Review Procedures

The Project schedule shall indicate the date to begin the acquisition activities of the ROW and the anticipated completion date of acquisition activities for each parcel. GDOT shall be advised of all additional properties and temporary rights or interests in real property to be acquired by the DB Team. In developing the Project schedule, the DB Team will give priority to the acquisition of parcels that have significant impact on the Project schedule and/or affect the critical path (i.e. relocation parcels, parcels with improvements, and property management).

The DB Team shall provide monthly ROW parcel status updates to GDOT.

In developing the Project schedule, DB Team shall incorporate the following applicable time periods for GDOT and/or FHWA reviews to include:

- ROW plans approval (45 Days) GDOT and/or FHWA
- ROW plan revisions approval (15 Days) GDOT
- Assignment of review appraiser (10 Days)
- Conceptual stage study review (30 Days)
- Appraisal review (30 Days)
    - No more than 8 appraisal packages can be submitted to GDOT for review within a 30 day period
- Relocation benefits package check review (30 Days)
    - No more than 8 relocation benefits packages can be submitted to GDOT for review within a 30 day period
- Negotiations (60 Days)
- Negotiation settlement amount approval (10 Days)
- Administrative review (30 Days)
    - No more than 4 administrative reviews can be requested of GDOT within a 30 day period
- Review of condemnation petition (60 Days)
    - No more than 8 condemnation petition packages can be submitted to GDOT for review within a 30 day period

GDOT and/or FHWA will not begin review until the submittal package is complete. If any submittal is determined by GDOT to be incomplete or to be revised, the submittal will be returned and the timeframe given above shall start over for each re-submittal.

Schedule delays resulting from inadequate or incomplete appraisals, specialty reports, ROW Plans, negotiation packages, relocation packages, and condemnation petitions, shall be the responsibility of DB Team.

5.10 Acquisition Process Summary

DB Team's major activities and services to be provided with respect to the acquisition of the ROW shall include, but are not limited to the following:

- ROW plans development, if applicable.
- ROW budget estimates and updates, if applicable.
- Title related activities, if applicable.
- Appraisals and/or other valuation or damage study reports, if applicable.
- Relocation benefits package preparations, if applicable.
- Negotiations
- Relocation advisory assistance
- Condemnation petition preparations
- Condemnation coordination services
- Demolition or removal of obstructions to clear required ROW\
- Documentation and document control
- Monthly progress reports
- ROW administration and management
- ROW quality management
- Obtaining all ROE's, as necessary

5.11 DB Team Conflict of Interest

If at any time, DB Team or to the best of DB Team's knowledge directly or indirectly acquires or has previously acquired any interest in real property likely to be parcels of the ROW or the remainders of any such parcels; loans or has previously loaned money to any interest holder in any real property likely to be a ROW parcel and accepts as security for such loan the parcel, or the remainder of any such parcel that is not a whole acquisition; or purchases or has previously purchased from an existing mortgagee the mortgage instrument that secures an existing loan against real property likely to be a ROW parcel, or the remainder of any such parcel is employed by or acts as a representative of any property owner or tenant which right of way or easement necessary for the Project will be negotiated then the DB Team shall promptly disclose the same to GDOT. In the case of acquisitions, loans or mortgage purchases that occurred prior to the Project letting, such disclosure shall be made within fourteen (14) Days after Project letting.

In the event that the DB Team, or any subsidiary or parent company of the DB Team, acquires a real property interest, whether title or mortgage, in parcels of the ROW Properties, the real property interest acquired or a release of mortgage as the case may be, shall be conveyed to the State of Georgia by condemnation. Any property interests acquired within 36 months prior to NTP1 will deem the DB Team ineligible to bid on the project at the Department's discretion.

In the event that the DB Team, or any subsidiary or parent company of the DB Team, is employed by or acts as a representative of any property owner or tenant which right of way or easement necessary for the Project will be negotiated, the DB Team must immediately cease that relationship or activity.

5.12 Meetings

DB Team shall conduct and attend meetings as requested by GDOT. Meetings may include, but are not limited to property owner meetings and property acquisition status meetings. At such meetings DB Team shall provide exhibits, take minutes, and distribute minutes, as requested by GDOT, within five (5) Calendar Days of the meeting. Minutes will not be finalized until an adequate comment period of five (5) days has been allowed.

5.13 Documentation and Reporting

DB Team shall provide GDOT with all specific reports and supporting documentation for review and approval during the acquisition process.

All correspondence with GDOT relating to acquisition of real property shall include a heading with the following information (at a minimum):

- County
- Project number(s)
- PI number(s)
- Parcel number
- Name and address of record owner(s), tenant, or other interest holder

All correspondence with property owners relating to acquisition of real property shall be on GDOT Letterhead and include the following information (at a minimum):

- County
- Project number(s)
- PI number(s)
- Parcel number
- Name and address of record owner(s), tenant, or other interest holder
- Name and contact information of ROW service provider

In administering and managing its ROW activities, DB Team shall:

- Maintain parcel records on file of all aspects of the acquisition process in accordance with GDOT requirements and applicable State and/or Federal Laws. Each negotiation parcel file shall include all documents required by GDOT and/or FHWA.

- Provide monthly summaries (or as requested) for the cost of ROW acquisition and related relocation assistance, including amounts authorized and amounts paid on a parcel-by-parcel basis and budget forecasting on an overall Project basis.
- Maintain and electronically transmit to GDOT, in a format acceptable to GDOT, monthly status reports (or as requested) including pre-acquisition, acquisition, relocation, and demolition or removal of improvement status.
- Prepare and submit electronically to GDOT, on a monthly basis (or as requested), a spreadsheet that contains ROW specific data.

5.14 Pre-Acquisition Activities

DB Team shall adhere to the GDOT ROW Manual for pre-acquisition activities.

5.14.1 ROW Plans and Engineering

- DB Team shall adhere to GDOT's Plan Presentation Guide, the GDOT ROW Manual and any current GDOT ROW plans checklist for the development of the ROW plans.
- Upon approval from GDOT and/or FHWA, the ROW plans may be prepared in separate constructible segments.
- DB Team shall stake and flag all required ROW to include all temporary and permanent easements in accordance with the GDOT Automated Survey Manual and prior to beginning negotiations with property owner(s), and restake such areas as requested by property owner or GDOT.

5.14.2 Title Services

DB Team shall provide to the assigned SAAG one (1) full size and one (1) half size set of the preliminary ROW plans in order for the SAAG to procure preliminary title reports and owner verifications prior to negotiations. DB Team shall adhere to the GDOT ROW Manual, and shall also comply with the following requirements:

- Review the preliminary title commitment or report to ensure that all current owners of record title are contacted and that negotiations or condemnation actions are conducted with all appropriate parties.
- Work with the current owners of record to each parcel or interest in a parcel or their designee and all other appropriate parties to clear any title exceptions or exclusions not acceptable to GDOT.

5.14.3 Introduction to Property Owners

DB Team shall prepare and send out initial contact letters of introduction for both property owners and displacees. The letters shall clearly describe the Project, GDOT's need for the owner's property, and shall include the name and telephone number of a DB Team's representative. The forms for these letters shall be approved by GDOT prior to being distributed. Property owners or displacees unable to read or understand the notice shall be given appropriate translation.

5.15 Appraisals

5.15.1 Appraisal Services

DB Team shall provide GDOT with fair market value appraisals. All appraisals shall be prepared in conformance with acceptable appraisal methods/standards (including the Uniform Relocation Act), and in accordance with professional appraisal methods and applicable GDOT and/or FHWA policies and procedures. In addition, DB Team's shall adhere to the GDOT ROW Manual, and shall also comply with the following requirements:

- Select appraisers from GDOT's prequalified list of appraisers as per the appropriate level as determined by the GDOT review appraiser. GDOT shall have final approval of the selection of each appraiser submitted by DB Team.
- Obtain back-up appraisal reports as necessary and per GDOT ROW Manual guidelines.
- Select certain specialty valuation and cost estimators as may be required by the assigned review appraiser.
- Establish personal pre-appraisal contact with each owner of record title and each occupant, and document all contacts.
- Contact the record title owners or their designated representatives, by telephone, to offer them the opportunity to accompany the appraiser on the appraiser's inspection of the parcel, and maintain a record of all such contacts in the parcel file.
- Obtain and include in the appraisal copies of all written leases, licenses and other occupancy agreements, including outdoor advertising/sign agreements, in order to identify lessees, licensee and other occupants with potential compensable interests in each parcel and to determine the value of each such interest.
- Coordinate with the GDOT review appraiser regarding corrections and/or additional information that may be required for a particular appraisal.
- Prepare a report by an environmental professional that meets ASTM E-1527-05, Standard Practice for Environmental Site Assessments: Phase 1 Environmental Site Assessment Process, documenting the environmental condition of each parcel, which may be based on field investigations and/or historical review, as appropriate for the particular parcel. The report shall be completed in coordination with the appraiser(s) and shall be available to the appraiser(s). A Phase I environmental site assessment shall be performed for all properties. If it is determined that there is a potential environmental risk based on the Phase I report then a Phase II investigation shall be performed. Prepare timely written notification to GDOT of any environmental or other concerns associated with the ROW or additional properties to be acquired that could require environmental remediation or other special attention or which would cause a report to be prepared.
- Cause the appraiser(s) to prepare updated appraisals when required by GDOT or as needed during eminent domain proceedings. An updated appraisal package shall comply with Uniform Standards of Professional Appraisal Practice (USPAP).
- Prepare and deliver to GDOT upon request, a copy of all file documents, as formally requested in discovery motions or request for production.

5.16 Acquisition Activities

5.16.1 DB Team Responsibilities During ROW Negotiations

- Conduct all negotiations in accordance with the requirements of applicable State and/or Federal Laws, including 23 CFR 710 and 49 CFR 24.
- Contact each property owner or owner's designated representative in person and onsite when possible to present the offer, on a pre-approved letter, and all required documentation (title report not more than six (6) months old; appraisal not more than twelve (12) months old). Make no less than three (3) follow-up negotiation contacts with the owner or the owner's representative (one original contact and two follow up contacts). DB Team's Acquisition Manager to make last contacts prior to sending out ten (10) day letter threats of condemnation on each parcel.
- Distribute to all property owners and displacees affected by the Project, GDOT-approved informational brochures.
- Identify lessors, lessees, licensees, occupants, or other parties with potential compensable interests including outdoor advertising sign owners, and, if appropriate, after consultation with GDOT, negotiate with such parties for the acquisition of their compensable interests.
- Verify the property owners, lessee, licensees, occupants, and other holders of compensable interests. Confer with and transmit to GDOT any settlement proposals from property owners, lessees, licensees, occupants, or other holders of any compensable interest, as applicable, including a detailed recommendation from DB Team. GDOT will determine whether to accept any settlement proposal. Delivery of any settlement proposal and DB Team's recommendation to GDOT shall occur within seven (7) Days of DB Team's receipt of the settlement proposal from the interest holder. GDOT shall provide a settlement decision to DB Team within ten (10) Days. DB Team shall then provide a response to the interest holder within five (5) Days.
- Send an administrative review hearing notification (ten (10) day letter) to the interest holder for those negotiations that are unsuccessful. In the event the interest holder requests an administrative review hearing, GDOT will facilitate the process. GDOT will then provide the results of the administrative review hearing to the DB Team and the interest holder.
- Provide timely (i.e., not more than five (5) Calendar Days after inquiry) response to the verbal or written inquiries of any property owner, lessee, licensee, occupant or other holder of a compensable interest, as applicable.
- Create and maintain a complete negotiation parcel file for each interest holder (separately from the relocation files), and in conformance with GDOT ROW Manual. All original ROW documents must be retained and properly secured in DB Team's Project office or as otherwise approved by GDOT, and shall be accessible by GDOT upon request.
- Submit complete (closed or condemned) negotiation parcel files to GDOT for review only after a thorough review is performed by the DB Team's ROW PM.
- Be open to all reasonable settlement proposals (that comply with the regulations as outlined in this section) from the interest holders, which are feasible and help expedite the ROW acquisition process. DB Team understands that GDOT and

FHWA encourage solutions which satisfy the interest holder and promote the success of the Project.

5.16.2 DB Team Responsibilities During Relocation Assistance

DB Team shall coordinate and perform the administrative requirements necessary to relocate any occupants and/or their personalty from ROW. All Work prepared by DB Team with respect to relocation assistance shall be performed in accordance with applicable State and Federal Laws, the Uniform Relocation Act, and in accordance with all provisions of this Agreement.

DB Team's major activities with respect to the relocation assistance of occupants from ROW shall include is but not limited to:

- Prepare a Conceptual Stage Study.
- Prepare a Relocation Plan in accordance with the GDOT ROW Manual.
- Monitor all relocation assistance activities.
- Prevent fraud, waste and mismanagement.
- Assist with all GDOT requests and be responsible for carrying out decisions made by GDOT.
- With respect to determining relocation assistance benefits and preparing relocation assistance benefits packages (offer package and any replacement housing reports), all packages shall be prepared in conformance with applicable State and/or Federal Laws and regulations, 49 CFR, Part 24 – the Uniform Relocation Act, FHWA and/or GDOT policies and procedures. Such Relocation Specialists shall be thoroughly familiar with the Uniform Relocation Act in regards to determining relocation assistance benefits. In addition, the GDOT approved format for relocation assistance benefits packages shall be used and demonstrated in all forms, letters, and package documentation. Measures shall be taken to protect the integrity of the relocation assistance benefits determination process, such as designating a separate qualified individual to administer the relocation assistance benefits (other than the individual determining the relocation assistance benefits). Relocation assistance benefits packages must be submitted to GDOT ROW for review and approval prior to DB Team proceeding with administering any relocation assistance benefits.
- DB Team shall provide relocation assistance strictly in accordance with the State and/or Federal Laws and the Uniform Relocation Act. With respect to administering relocation assistance benefits, DB Team shall:
- Provide written notice to all property owners, lessees, licensees, occupants, and potential relocated person(s) regarding eligible relocation assistance; provide them with a relocation assistance brochure that has been approvedby GDOT; perform relocation interviews, complete and maintain interview forms and discuss general eligibility requirements, programs, and services with potential displacees; and maintain a thorough written record of all contacts.
- Provide in writing to GDOT any questions as to the eligibility of a potential relocated person(s).
- Contact and provide relocation assistance to those parties affected by the ROW acquisition.
- Locate information, evaluate and maintain files on comparable available housing, commercial, retail, and industrial sites.

- Calculate replacement supplement benefits.
- Compute and submit relocation benefits packages to GDOT for review and approval prior to DB Team's preceding with any relocation activities.
- Perform and complete a Decent, Safe and Sanitary (DSS) inspection for any replacement housing.
- Secure and process any required moving estimates and forms, to be approved by GDOT, for the relocation of personal property.
- Coordinate moves with displacees and/or moving companies in accordance with GDOT procedures and the Uniform Relocation Act.
- Attend all closings on replacement properties, and assure supplemental payments, if any, are properly distributed in a timely manner.
- Process and compute increased interest payments on the mortgage of owner-occupied dwellings, as required.
- Deliver to displacees a 90 Day notice of eligibility letter simultaneous with the delivery of the relocation benefits package. Deliver a 90 Day letter to displacees with the location of the comparable property used to compute the supplement.
- Deliver a 60 Day notice to vacate to displacees after obtaining title to the ROW.
- Notify GDOT immediately if a displacee has not moved after the 60 Day notice to vacate has expired. Prepare a written recommendation to facilitate the displacees' move.
- Be available for any appeals or hearings.
- Prepare relocation payment claim submissions for all displacees and all relocation assistance benefits.
- Verify DSS dwelling criteria on all replacement housing as selected by the displacees.
- Secure dwellings and structures no later than 14 Days after vacancy and protect the ROW following acquisition and relocation.
- Maintain a complete file, separate from acquisition files, on each displacee and make available for immediate inspection to GDOT.
- Be responsible for all relocation activities that may occur after title is secured by condemnation.
- Prepare all correspondence to the displacees or their representative(s) on GDOT's approved letterhead.
- Assist the SAAG with eviction proceedings. Serve notice of eviction proceedings to the occupant(s) of the property who have not complied with move dates. Coordinate the eviction process with the local authorities and accompany the Sheriff's Department when the local authorities are carrying out eviction.

5.16.3 DB Team Responsibilities During Closings

GDOT assigned SAAG will conduct all closings. For purposes of closing services, DB Team shall:

- Assure relocation negotiation agent attends all relocation closings.
- Assure the relocation negotiation agent properly coordinates all assistance payments with the SAAG and GDOT.

- Provide transportation assistance to all interest holders needing transportation services to and/or from the closing.

5.16.4 DB Team Responsibilities For Condemnation Support

DB Team, as directed by GDOT, shall support condemnation efforts undertaken by the GDOT assigned SAAG and further delineated as follows:

- Notify GDOT and document the reason(s) for condemnation, including recommendations for properly obtaining title in consideration of all interest holders.
- List all interest holders in the condemnation petition.
- Coordinate with assigned SAAG on all applicable eminent domain/condemnation activities in accordance with the policies and procedures as described in the GDOT ROW Manual and as required per State and Federal Laws.
- Request an updated title report from GDOT assigned SAAG issuing the original title commitment prior to condemnation.
- Prepare and submit condemnation petitions to the Office of ROW for review by GDOT's Legal Division and make any revisions or corrections, as requested by GDOT.
- Forward, upon GDOT approval, petitions to assigned SAAG for recording with the appropriate Clerk of Superior Court.
- Procure and make available a condemnation court coordinator who shall assist the assigned SAAG in making arrangements for conferences with witnesses prior to trial, appearing at court hearings, perform any other duties necessary in eminent domain proceedings up until six (6) months after Final Acceptance. GDOT will complete all cases not completed within six (6) months of Final Acceptance.
- Procure appraisals and specialty reports, as required for condemnation proceedings, and as acceptable to GDOT and the assigned SAAG.
- Procure and make available any necessary expert witnesses as required by GDOT and assigned SAAG. GDOT will make payment to expert witnesses required by SAAG.
- Arrange for the appearance of all expert witness(es) or fact witness(es) when requested by the assigned SAAG.
- Provide GDOT with a parcel status, on a monthly basis, for all condemnation parcels.
- Provide the assigned SAAG with proper monetary court deposits for Fair Market Value (FMV).

5.16.5 DB Team Responsibilities For Clearance of ROW

Prior to removal or demolition of any buildings, improvements, and/or fixtures, DB Team shall provide to GDOT photographs of the property and all improvements, and other necessary documentation as applicable per GDOT ROW Manual. DB Team shall also provide photos of personalty and items of dispute in and of a quality

suitable for presentation as evidence in court. Following possession of any improved property ROW, DB Team shall:

- Coordinate all property management activities with GDOT ROW property management section.
- Comply with all required government jurisdictions.
- Secure and protect the buildings, improvements and fixtures on the ROW until they are disposed of or demolished. DB Team shall board-up, mow, and winterize as required by GDOT or other governmental applicable laws.
- Coordinate with owners and occupants to assure the clearance of personal property from the ROW has occurred.
- Provide for any insect and rodent control and initiate extermination as required to protect the adjacent properties and rid the ROW from infestations.
- Secure all appropriate governmental approvals required for demolition or removal of improvements. Secure any environmental surveys or tests as may be required by local, State and/or Federal jurisdictions. Notify GDOT in writing of all such activities.
- Prepare necessary documentation for disposal of improvements, fixtures and buildings in accordance with applicable laws and submit the same to GDOT.
- Properly disconnect all utility service(s) including, but not limited to, power, water, gas meter pulls, and sewer caps, at the back of the required ROW at a minimum, prior to any demolition or removal of any buildings, improvements and/or fixtures.
- Process all required forms, documents and permit applications in order to proceed with the timely demolition or removal of any improvements, buildings and fixtures.
- Properly notify GDOT ROW property management section upon completion of the demolition and clearance of all buildings, improvements and/or fixtures.

5.16.6 DB Team Responsibilities For Property Fencing

DB Team shall comply with the specifications found in the latest version of GDOT's Design Policy Manual, and any Supplemental Specifications. Fencing standards for DB Team-provided fencing shall conform to referenced standards. All fencing installed by DB Team shall be preapproved by GDOT prior to installation.

5.17 Early ROW Acquisition

Early ROW acquisitions shall be considered by the DB Team according to the guidelines set forth in 49 CFR 710.503. DB Team shall submit to GDOT a letter of recommendation for any advance "Hardship" purchase requests. GDOT and/or FHWA will review all advanced "Hardship" purchase requests.

DB Team shall notify GDOT if an advanced protective buy purchase request would be in GDOT's best interest. GDOT and/or FHWA will review all advanced "Protective Buy" purchase requests.

The DB Team shall update GDOT regularly, no less frequently than monthly, on the status of any advanced acquisition purchases, and the DB Team's ROW PM shall track all acquisitions through GDOT's ROW tracking system.

6 UTILITY ADJUSTMENTS

6.1 General Requirements

By Georgia Statues, utilities, whether public or privately owned, aerial or underground, are permitted by the Department and local governments to be accommodated within the public right of way. To this end, the DB Team will make every effort to avoid utilities. Design/construction techniques that minimize or avoid utility conflicts may involve increased upfront costs; however, those costs may be offset by savings during construction, in addition to the total cost savings for the Project (the Department or local government) and the respective utility owners.

Additional guidance for accommodating utilities within the right of way are given in the AASHTO publications: A Guide for Accommodating Utilities within Highway Right of Way, A Policy on Geometric Design of Highways and Streets; the TRB publication: Policies for Accommodation of Utilities on Highway Rights-of-Way; and in GDOT's Utility Accommodation Policy and Standards, current edition.

The Utility Plans are used as the primary tool to identify and resolve utility related conflicts/issues prior to beginning the construction of a Project. Also, when these plans are properly prepared, as indicated in this Section 6, they will support the vital coordination required between the DB Team and the Utility Owner during construction.

Utility plan sheets are comprised of completed roadway plan sheets, but shall contain more detailed information featuring existing and proposed utility facilities. Specific requirements for Utility Plans are detailed in this section 6.

The DB Team shall cause all Utility Adjustments necessary to accommodate the project. GDOT will assist the DB Team in the Utility Adjustment process to the extent as described in the Design-Build Agreement and the UAM (Utility Accommodation Manual). Some utility adjustments may be performed by the Utility Owner with its own forces and/or contractors and consultants; all others will be performed by the DB Team with its own forces and/or contractors and consultants (subject to the approval rights required by the utility owner for those working on their own facilities). The allocation of responsibility for the Utility Adjustment work between GDOT and the Utility Owner will be specified in the Utility Agreement.

6.1.1 When Utility Adjustment is Required

Utility Adjustment may be necessary to accommodate the Facility for either or both of the following reasons: (i) a physical conflict between the Facility and the Utility, and/or (ii) an incompatibility between the Facility and the Utility based on the requirements in Section 6.2.1 (Standards), even though there may be no physical conflict. The physical limits of all Utility Adjustments shall extend as necessary to functionally replace the existing Utility, whether inside or outside of the Existing ROW and Proposed ROW. Section 6.2.4.2 (Acquisition of Replacement Utility Property Interests) contains provisions that address the acquisition of easements for Utilities to be installed outside of the Existing ROW and Proposed ROW.

6.1.2 Certain Components of the Utility Adjustment Work

6.1.2.1 Coordination

The DB Team shall communicate, cooperate, and coordinate with GDOT, the Utility Owners, property owners, local agencies (Government Entities), locally impacted businesses, and potentially affected third parties, as necessary for performance of the Utility Adjustment Work. The DB Team shall provide advance notification to all impacted local agencies, business and property owners for and planned disruption of service. The DB Team shall coordinate with GDOT for any public outreach for planned utility disruptions as required. The DB Team shall be responsible for assisting in the preparation of all Utility Agreements. Utility Agreement Templates can be acquired from the State Pre-Construction Utility Engineer.

The DB Team shall have the responsibility of coordinating the Project design and construction with all utilities that may be affected. Coordinating responsibilities shall include but not be limited to the following:

- The DB Team shall initiate early coordination with all Utility Owners located within the Project limits. All Utility Coordination shall be performed to GDOT standards by a prequalified firm in Area Class 3.10 - Utility Coordination. Refer to the following website for a list of current prequalified firms:

  http://www.dot.ga.gov/doingbusiness/consultants/Pages/default.aspx

- The DB Team shall be responsible for the cost of Utility Coordination. Coordination shall include, but shall not be limited to, contacting each Utility Owner to advise of the proposed Project; supplemental verification of the locations of existing utility facilities (including the employment of additional Overhead/Underground Subsurface Utility Engineering investigations (SUE)) as needed in determining requirements for the relocation or adjustment of facilities.

- The DB Team shall meet with all Utility Owners within the project limits, Department's District Utilities Office and the State Subsurface Utilities Engineer (or designee) for a SUE Kick-Off meeting (concurrent with the first utility coordination meeting) within 15 days of the Notice to Proceed 1 to gain a full understanding of what is required with each submittal and the overall project utility coordination processes.

6.1.2.2 Betterments

Replacements for existing Utilities shall be designed and constructed to provide service at least equal to that offered by the existing Utilities, unless the Utility Owner specifies a lesser replacement. Utility Enhancements are not included in the Work; however, any

Betterment work furnished or performed by the DB Team as part of a Utility Adjustment shall be deemed added to the Work, on the date the Utility Agreement providing for same becomes fully effective. The DB Team shall perform all coordination necessary for Betterments.

- Titles 32-6-170 and 32-6-173, of the O.C.G.A., authorizes the Department to pay the cost of removing, adjusting, and relocating any public utility given certain provisions are met. Such provisions for reimbursement are detailed in Section 4.2 of the UAM. However, all such costs the Department is authorized to pay or participate in shall be limited to the costs of removing, adjusting, and relocating those facilities which are physically in place and in conflict with proposed construction and, where replacement is necessary, to the costs of replacement in-kind. That proportion of the costs representing improvement or betterment in a facility shall be excluded from the costs eligible for payment or participation by the Department, unless required to meet current laws, regulations, industry standards or codes.

- Costs of direct labor, materials, supplies, and equipment required to complete the adjustment or relocation, less salvage credit for any materials removed from the project and credits for any betterment not required by the highway project. The work may be accomplished with the Utility's own forces, or by contract upon prior Department acceptance of the Utility's continuing contract with a contractor or bid tabulations from a Utility's competitive bid for such work. (Requirements and procedures for acceptance of contractors are contained in Section 4.2.D of the UAM).

- **Contract Item Agreement (CIA)** - Used for including utility work in the Department's project and performed by the DB Team. Any utility system upgrades, betterments, or non-reimbursable relocations (not covered in the Cases specified in Section 4.2.A.2 of the UAM) to be installed in the Department's project shall require reimbursement to the DB Team from the Utility.

6.1.2.3 Protection in Place

The DB Team shall be responsible for Protection in Place through the use of a GDOT approved Retention Request of all Utilities impacted by the Project as necessary for their continued safe operation and structural integrity and to otherwise satisfy the requirements described in Section 6.2.1 (Standards). The DB Team shall submit to GDOT for review and acceptance a Retention Request for each utility that will remain in place in accordance with GDOT's *Utility Accommodation Policy and Standards Manual*.

6.1.2.4 Abandonment and Removal

The DB Team shall make all arrangements and perform all work necessary to complete each abandonment or removal (and disposal) of a Utility in accordance with the

requirements listed in Section 6.2.1 (Standards), including obtaining Governmental Approvals and consent from the affected Utility Owner and any affected landowner(s), or shall confirm that the Utility Owner has completed these tasks.

The Utility shall notify the DB Team and the Department in writing of the intention to abandon its facilities in place. Such abandoned installations within the right-of-way shall remain the responsibility of the Utility. The Department may give reasonable notice to require the removal of abandoned utility facilities and restoration of the right-of-way, or the filling of any such facility by an approved method, when necessary to avoid interference with the operation, maintenance or reconstruction of the highway. Any utility facility that the Utility requests to abandon shall conform to the following:

- All underground non-metallic utility facilities to be abandoned shall be locatable using a generally accepted electro-magnetic locating method to enable pipe and cable locates.

- Any underground utility facility, approved or elected to be abandoned in place, larger than 2 inches up to 6 inches, inside diameter, shall be plugged at all open ends of the abandoned facilities. All facilities with an inside diameter larger than 6 inches shall be grout filled 100%. A request for an exception to this policy may be made to the State Utilities Engineer on a case by case basis when proven that no detriment will come to the roadbed by doing so.

Hazardous Utility Facilities to be Abandoned

Whenever an existing utility facility contains a hazardous material and such facility exists
in the public rights of way of any highway, road, or street, and the Utility determines that such facilities will no longer be utilized, the Utility that owns and operates the utility facility shall submit the Request For Retention Of Abandoned Facilities Containing Hazardous Materials form (see Appendix) along with a permit through Georgia Utility Permitting System (GUPS) to the Department. Upon request for abandonment, the Utility shall have the discretion to:

- Remove and dispose of the asbestos pipe in accordance with federal laws and regulations;
- Leave the asbestos pipe in place and fill it with grout or other similar substance designed to harden within the pipe; or
- Allow the pipe to remain undisturbed in the ground and take no further action.

At the request of the Department or Utility, any hazardous material left in the right of way as authorized by the approval of the permit and accompanying Request for Retention of Abandoned Facilities Containing Hazardous Materials form shall be marked as to be locatable. The approved permit and form will indicate how the abandoned facility will be located. The Utility shall not relinquish the ownership of said

facility as stated in Official Code of Georgia Annotated (OCGA) Section 25-9 and Section 32-6-174; it shall be deemed abandoned and out of service. If the Utility selects either item (b) or (c) above as part of a new utility installation request and said abandoned facility is later determined, at any time in the future, to be part of a highway improvement or project that the Department is undertaking or plans to undertake, or is in conflict with any other operation or activity upon said rights of way, by either the Department or others, then said facility shall be removed by the Utility in accordance with federal laws and regulations. Any costs, claims, or other liability associated with the owner's decision pursuant to this section shall be borne by said Utility.

The entity shall also provide plans “marked so as to be locatable” with the following at each end of the proposed abandonment.

- X, Y, and Z using the North American Datum of 1983/1994 = NAD83(94) and North American Vertical Datum of 1988 = NAVD88.
- Elevation of top and/or bottom of utility tied to datum.
- Elevation of existing grade over end of facility tied to datum.
- Horizontal location referenced to coordinate datum.
- Furnish, install, and color code a permanent above ground marker (i.e.P.K. nail, peg,steel pin, or hub) directly above the centerline of the structure and record the elevation of the marker.
- Elevations shall have an accuracy of +/-0.05-ft.
- Horizontal data accurate to within +/-0.2-ft.

➢ Fiberglass composite markers, or equal, will be required to be installed at the right of way limits at the beginning and ending of proposed abandon facility and placed at intervals no to exceed 500 ft. in between. Markers shall be a minimum of 62” in length and 3.75” in width or diameter. Warning label shall state the following: Warning, Buried Asbestos line, Call Before you Dig logo, Owner Telephone Number(s), Owner Name, and appropriate horizontal offset distance to the abandoned facility noted.

➢ When determined by the engineer that flexible markers at the right of way line is undesirable for the area, warning buttons, 3” minimum diameter, with the same information may be permanently affixed on the sidewalk, curb, or at a location directed by the engineer.

6.1.2.5 Service Lines and Utility Appurtenances

Whenever required to accommodate construction, operation, maintenance and/or use of the Project, the DB Team shall cause service line adjustments and utility appurtenance adjustments. On completion of these, the DB Team shall cause full reinstatement of the roadway, including, but not limited to reconstruction of curb, gutter, sidewalks, and landscaping, whether the Utility Adjustment Work is performed by the Utility Owner or by the DB Team.

6.1.2.6 Early Adjustments

Early adjustments will be considered by the Department on a case by case basis.

6.1.3 Recordkeeping

The DB Team shall maintain construction and inspection records in order to ascertain that Utility Adjustment Work is accomplished in accordance with the terms and in the manner proposed on the approved Utility Work Plan(s) and otherwise as required by the Design-Build Agreement and the applicable Utility Agreement(s).

6.2 Administrative Requirements

6.2.1 Standards

All Utility Adjustment Work shall comply with all applicable Laws, the Technical Provisions, the Utility Adjustment Standards, and *GDOT's Utility Accommodation Policy and Standards Manual*.

6.2.2 Communications

6.2.2.1 Communication with Utility Owners: Meetings and Correspondence

The DB Team is responsible for holding meetings and otherwise communicating with each Utility Owner as necessary to timely accomplish the Utility Adjustments in compliance with the DB Documents. GDOT may participate in these meetings if requested by the Utility Owner or the DB Team or otherwise as GDOT deems appropriate.

At least seven (7) Days in advance of each scheduled meeting, the DB Team shall provide notice and an agenda for the meeting separately to GDOT and the appropriate Utility Owner. The DB Team shall prepare and distribute minutes of all meetings within seven (7) Days of the meeting with Utility Owners and shall keep copies of all correspondence between the DB Team and any Utility Owner.

The DB Team will be allowed to coordinate with Utility Companies for early coordination of Utility Adjustments.

6.2.3 Worksite Utility Coordination Supervisor

During the construction of the Project, the DB Team shall designate, prior to beginning any work, a Worksite Utility Coordination Supervisor (WUCS) who shall be responsible for initiating and conducting utility coordination meetings and accurately recording and reporting the progress of utility relocations and adjustment work. Also, the WUCS shall prepare an Emergency Response Plan for the purpose of planning, training, and communicating among the agencies responding to the emergency. The WUCS shall be the primary point of contact between all of the Utility companies, the DB Team and the Department. The WUCS shall recommend the rate of reoccurrence for utility coordination meetings and the Engineer will have the final decision on the regularity for utility coordination meetings. In no case will utility coordination meetings occur less

than monthly until controlling items of utility relocations and adjustment milestones are completed. The WUCS shall contact each of the utility companies for the purpose of obtaining information including, but not limited to, a Utility Adjustment Schedule for the controlling items of utility relocations and adjustments. The WUCS shall notify the appropriate utility company and/or utility subcontractor and the Department of the status of controlling items of relocations and adjustment milestones as they are completed. The WUCS shall furnish the Engineer, for acceptance, a Progress Schedule Chart, prior to beginning Construction unless otherwise specified, which includes the utility companies controlling items of work and other information in accordance with the Contract documents. Duties and Responsibility of the Worksite Utility Coordination Supervisor, (WUCS):

- Qualifications: The WUCS shall be an employee of the Prime DB Team, shall have at least one year experience directly related to highway and utility construction in a supervisory capacity and have a complete understanding of the Georgia Utilities Protection Center operations, and shall be knowledgeable of the High-voltage Safety Act and shall be trained on the Georgia Utility Facility Protection Act (GUFPA). The Department does not provide any training on GUFPA but will maintain a list of the Georgia Public Service Commission certified training programs developed by other agencies. Currently the following companies offer approved GUFPA training programs:

  Associated Damage Consultants
  Phone: 706.234.8218 or 706.853.1362

  Georgia Utility Contractors Association
  Phone: 404.362.9995

  Georgia Utilities Protection Center
  Phone: 678.291.0631 or 404.375.6209

  H B Training & Consulting
  Phone: 706.619.1669 or 877.442.4282 (Toll Free)

  The Prime DB Team is responsible for obtaining the GUFPA training for their employees.

  Questions concerning the Georgia Public Service Commission GUFPA training program shall be directed to:

  Georgia Public Service Commission
  244 Washington St. SW
  Atlanta, GA 30334-5701
  404.463.9784

Ticket Status

During the utility coordination meetings the WUCS shall collect and maintain the Ticket Status information to determine the status of all locate requests within the Project limits. This information will be used to assure those planning to use mechanized equipment to excavate or to work within the Project limits are prepared to begin work when they have reported or estimated beginning work. At points where the DB Team's or utility company's operations are adjacent to or conflict with overhead or underground utility facilities, or are adjacent to other property, damage to which might result in considerable expense, loss, or inconvenience, work shall not commence until all arrangements necessary for the protection thereof have been made.

Notice

The names of known utility companies and the location of known utility facilities will be shown on the Plans, or listed in the Overhead/Subsurface Utility Engineering Investigation if performed, or in the Special Provisions; and the WUCS shall give 24-hour notice to such utility companies before commencing work adjacent to said utility facilities which may result in damage thereto. The WUCS shall further notify utility companies of any changes in the DB Team's work schedules affecting required action by the utility company to protect or adjust their facilities. Furthermore, this 24-hour notice shall not satisfy or fulfill the requirements of the DB Team as stated in Chapter 9 of Title 25 of the Official Code of Georgia Annotated, known as the "Georgia Utility Facility Protection Act".

Agenda

The WUCS shall cooperate with the companies of any underground or overhead utility facilities in their removal and relocations or adjustment work in order that these operations may progress in a reasonable manner, that duplication of their removal and relocations or adjustment work may be reduced to a minimum, and services rendered by those parties will not be unnecessarily interrupted. To promote this effort the WUCS shall prepare an agenda for the utility coordination meetings and circulate same 7 business days in advance of the meeting to encourage input and participation from all of the utility companies. The agenda will be prepared by an examination of the Project site and may include photographs of potential/actual utility conflicts.

Submission

Provisions for reporting all utility coordination meetings, the progress of utility relocation and adjustment work milestones and ticket status information shall be reported on a form developed by the WUCS and will be distributed by the WUCS to all of the utility companies as milestones are met and shall be included as part of the Project records. These reports shall be delivered to the Engineer for review, on a monthly basis. The WUCS shall immediately report to the Engineer any delay between the utility relocation and adjustment work, the existing Utility Adjustment Schedule, or the proposed Utility Adjustment Schedule so that these differences can be reconciled.

The DB Team will be required to utilize prequalified utility consultants and contractors.

6.2.4 Real Property Matters

The DB Team shall provide the services described below in connection with existing and future occupancy of property by Utilities.

Determination of Utility Right-of-Way and Easement – The determination as to the need for replacement right-of-way or easement for utilities will be made as follows:

a. The Department will determine what right-of-way is required for construction of the highway project and will normally provide adequate right-of-way for the existing or typical utility facilities that will be permitted to be accommodated within that right-of-way. The DB Team will coordinate with each Utility to request any special right-of-way requirements necessary for their facilities.

b. If there is not sufficient space for the utility within the right-of-way or easement which will be required for the construction of the project, the DB Team will coordinate with the Utility to verify such circumstance and will obtain a written statement as to whether the Utility desires that the DB Team acquire such additional rights-of-way or easement as may be required for utility relocation under the provisions of the O.C.G.A. § 32-6-172. If the Utility insists on acquiring its own right-of-way or easement, the Utility shall notify the DB Team in writing of such and shall include this acquisition in the Work Plan. Additionally, if the Utility intends to acquire its own right-of-way or easement, it shall be the DB Teams and District Utilities Engineer's responsibility to ensure that the Department's monthly Right-of-Way Status Acquisition Reports be forwarded to such Utility as received from the State Right-of-Way Office. These reports are critical to ensure that the Utility can begin acquiring their required right-of-way or easement soon after the DB Team has completed its negotiations with each affected property owner. In either case, the following method of acquisition described in Section 4.1.C.6 of the UAM shall apply.

Method of Acquisition - It is desirable that replacement right-of-way and easements for utilities be acquired concurrently with acquisition of right-of-way for the highway project.

Adjustment on Projects

a. **Reimbursable Cases** - When the Utility is entitled to reimbursement for the cost of acquisition of replacement right-of- way or easements, the Department will request permission from the Utility, which must be obtained in writing, to acquire necessary utility right-of-way or easements concurrently with its acquisition of the normal highway right-of-way. If the Utility has some particular reason for insisting on acquiring the right-of-way or easement, this will be included in a Utility Agreement.

b. **Non-Reimbursable Cases** - If the cost of acquisition of replacement right-of-way or easement is not reimbursable, the Department will, at the written request of the Utility, acquire such right-of-way or easement under written agreement and the Utility will reimburse the Department for such cost in accordance with the State law. Any acquisition by the Department will comply with all requirements pertaining to the Department's acquisition of its own right-of-way or easement.

Interest to be Acquired - If the Utility agrees for the DB Team to acquire replacement right-of-way, or easement, the DB Team in conjunction with the Department's Office of Right-of-Way will determine what interest will be acquired and the instrument (i.e., quitclaim, easement limited agreement, etc.) to be used to transfer such interest from the Department to the Utility. The State Right-of-Way Engineer will notify the DB Team, District Utility Engineer and the State Utilities Office as to a determination regarding the Department's agreement to acquire the right-of-way and of what interest is proposed to acquire. The DB Team, in turn, will notify the Utility and District Utility Engineer of that determination and will promptly notify the State Right-of Way Office, with a copy to the State Utilities Engineer, of any exceptions the Utility may make to that determination. The State Utilities Engineer will be responsible for the establishment of Easement Limited Agreements (ELA) with the Utility after determination by the State Right-of-Way Engineer that such ELA is required to complete the rights of way acquisition. A copy of the ELA will be sent to the State Right-of-Way Office for legal recording.

6.2.4.1 Documentation of Existing Utility Property Interests – Affidavits

For each Existing Utility Property Interest within the Existing ROW and Proposed ROW claimed by any Utility Owner, the DB Team shall include an easement deed or an Affidavit of Property Interest in the applicable Utility Work Plan, with appropriate documentation of the Existing Utility Property Interest attached. Any such claim shall be subject to GDOT's acceptance as part of a Utility Work Plan review. Except as otherwise directed by GDOT, the DB Team shall prepare all Affidavits of Property Interest using the standard GDOT form.

6.2.4.2 Acquisition of Replacement Utility Property Interests

Each Utility Owner will be responsible for acquiring any Replacement Utility Property Interests that are necessary for its Utility Adjustments. DB Team shall have the following responsibilities for each acquisition:

- The DB Team shall coordinate with, and provide the necessary information to, each Utility Owner as necessary for the Utility Owner to acquire any Replacement Utility Property Interests required for its Utility Adjustments.
- If any of the DB Team-Related Entities assists a Utility Owner in acquiring a Replacement Utility Property Interest, such assistance shall be by separate

contract outside of the Work, and the DB Team shall ensure that the following requirements are met:

- The files and records must be kept separate and apart from all acquisition files and records for the Proposed ROW and Additional Properties.
- The items used in acquisition of Replacement Utility Property Interests (e.g., appraisals, written evaluations and owner contact reports) must be separate from the purchase of the Proposed ROW and Additional Properties.
- Any the DB Team-Related Entity personnel negotiating the acquisition of Replacement Utility Property Interests must be different from those negotiating the acquisition of Project ROW.

The DB Team is not responsible for Utility Owner condemnation proceedings.

6.2.4.3 Georgia Utility Permit

The DB Team shall cause Utility Owners to submit utility permit requests through the current GDOT approved utility permit tracking software to accommodate the following:

- Each Utility proposed to be relocated within the Existing ROW, Proposed ROW and Additional Properties.
- Each Utility proposed to remain in its existing location within the Existing ROW, Proposed ROW and Additional Properties.
- Any Existing Utility Property Interest located within the Existing ROW, Proposed ROW and Additional Properties that is not required to be relinquished pursuant to Section 6.2.4.3 (Relinquishment of Existing Utility Property Interests), and is not addressed in the foregoing clause (i) or clause (ii).

The DB Team shall arrange for the Utility Owner to execute each Georgia Utility Permit(s). Each Georgia Utility Permit (executed by the Utility Owner) shall be subject to GDOT's acceptance as part of a Utility Work Plan.

6.2.4.4 Documentation Requirements

The DB Team shall prepare, negotiate (to the extent permitted by this Section 6.2.4 (Real Property Matters), and obtain execution by the Utility Owner of (and record in the appropriate jurisdiction, if applicable) all agreements and deeds described in this Section 6.2.4, including all necessary exhibits and information concerning the Project (e.g., reports, Plans, and surveys). Each agreement or deed shall identify the subject Utility(ies) by the applicable Utility Permit Number, and shall also identify any real property interests by parcel number or highway station number, or by other identification acceptable to GDOT.

6.3 Design

6.3.1 DB Team's Responsibility for Utility Identification

The DB Team bears sole responsibility for ascertaining, at its own expense, all pertinent details of Utilities located within the Existing ROW, Proposed ROW, limits of Additional Properties or otherwise affected by the Facility, whether located on private property or within an existing public ROW, and including all Service Lines.

The DB Team may utilize Subsurface Utility Engineering (S.U.E) process for locating all existing utilities within the project limits to develop the Utility Work Plan.

GDOT will not participate in any of the Preliminary Engineering (PE) costs for the Utility Adjustments.

The DB Team will coordinate reviews of the utility relocation information and obtain acceptance from the Utility Owner and GDOT. The GDOT District Utility Engineer should be kept informed if preliminary plans indicate that no conflict exists, and if the owner concurs with this information, then the owner shall provide a letter of "no conflict" to the DB Team.

6.3.2 Technical Criteria and Performance Standards

All Design Documents for Utility Adjustment Work, whether furnished by the DB Team or by the Utility Owner, shall be consistent and compatible with the following:

- The applicable requirements of the DB Documents, including Section 6.2.1 (Standards)
- Any Utilities remaining in, or being installed in, the same vicinity
- All applicable Governmental Approvals
- Private approvals of any third parties necessary for such work

The DB Team shall ensure that the Design Documents are complete and include all utility adjustment schedules/utility work plans, utility relocation plans, and associated agreements necessary to address all foreseeable utility impacts that might affect the project. This includes utility issues affecting right-of-way acquisition, environmental clearances, project staging, and project constructability.

The Department has executed and provided a Memorandum of Understanding (MOU) between the Department and each Utility Owner. If a utility is impacted by the project and the impact requires a relocation of the utility, refer to the executed MOU for the party responsible for the cost of the relocations.

The DB Team shall endeavor to design the Project to avoid conflicts with utilities when feasible, and minimize impacts where conflicts cannot be avoided. The DB Team shall submit to the Department a SUE Utility Impact Analysis (UIA) in the Department's prescribed format as specified in Volume 2 Table 23-1.

When a utility owner claims prior rights in the MOU and does not include either design or construction in the Design-Build Agreement, the DB Team shall research and verify any compensable prior right claimed in the MOU that would result in reimbursement to the utility owner for any relocation design, construction or material cost. If there is a dispute over property interests with a Utility Owner, the DB Team shall be responsible for resolving the dispute. The DB Team shall meet with the Department's District Utilities Engineer (or designee) and ITS Manager to present the property interests information gathered. This information must be sufficient for the District Utilities Engineer (or designee) to certify the extent of the Utility Owner's property interests. The Department shall have final approval authority as to the DB Team's determination of whether the Utility Owner has property interests. The DB Team will be responsible for all Design, Construction and Material costs when the design and construction are included in the Design-Build Agreement.

6.3.3 Memorandum of Understanding (MOU)

Depending on the provisions stipulated in the Memorandum of Understanding (MOU – See Attached) between the Department and each Utility Owner the DB Team shall be responsible for one of the following Design Activities:

- The DB Team shall be responsible for coordinating the design work of its subcontractors and the various Utility Owners. The resolution of any conflicts between Utilities and the construction of the Project shall be the responsibility of the DB Team. No additional compensation will be allowed for any delays, inconveniences, or damage sustained by the DB Team or its subcontractors due to interference from utilities or the operation of relocating utilities.
- The DB Team shall be responsible for designing all utility removal, relocation, and adjustments required to accommodate the proposed Project. This shall include any required inspection, permitting, testing and monitoring to ensure that the work is properly performed to the certified design package. The resolution of any conflicts between Utilities and the construction of the Project shall be the responsibility of the DB Team. No additional compensation will be allowed for any delays, inconveniences, or damage sustained by the DB Team or its subcontractors due to interference from utilities or the operation of relocating utilities.

The DB Team shall provide each Utility Owner with design plans and Preliminary Utility Plans as soon as the plans have reached a level of completeness adequate to allow them to fully understand the Project impacts. The Utility Owner will use the DB Team's design plan for preparing Utility Relocation Plans, cost estimates, and respective Utility Adjustment Schedules (UAS). If a party other than the Utility Owner prepares Utility

Relocation Plans, there shall be a concurrence box on the plans where the Utility Owner signs and accepts the Utility Relocation Plans as shown.

The DB Team shall prepare all engineering design, plans, technical specifications, cost estimates, and utility adjustment schedules required to perform the necessary utility relocations. The DB Team shall certify to the Department that the design package listed above has been reviewed and accepted by the each respective Utility Owner.

The DB Team shall be responsible for collecting the following from each Utility Owner that is located within the Project limits: Certified Utility Relocation Plans including a letter of "no cost" where the Utility Owner does not have a prior right; Utility Agreements, certificates of eligibility, including cost estimate and Utility Relocation plans where the Utility Owner has a property interest; Letters of "no conflict" where the Utility Owner's facilities will not be impacted by the Project. The DB Team shall prepare and submit to the Department a Utility Retention Request for any utility which is to remain under the roadway within the construction limits.

The DB Team shall be responsible for determining if the Department has agreed to pay for in-kind relocations according to any approved Utility-Aid assistance package for publicly (government) owned utilities found within the Project's limits see the Department's Policies & Procedures (formerly known as TOPPS Policy #6863-11) for additional information regarding Utility-Aid. If the Department has approved Utility-Aid; it is the DB Team's responsibility to assemble the necessary information including any Utility Agreements in a final and complete form and in such a manner that the Department may accept the submittals with minimal review. Failure to submit such required Utility Agreements prior to the beginning of construction shall fully transfer the utility owner's obligations, as stated in the subject Utility-Aid assistance package, to the DB Team. Deductions to reimburse the Department for such obligations may be made from any current partial payment of the Lump Sum price.

The DB Team shall review all Utility Relocation Plans and Utility Agreements, Utility Estimates and certificates of eligibility to ensure that relocations comply with the Departments "Utility Accommodation Policy and Standards Manual". The DB Team shall review the utility plans to identify that there are no conflicts with the proposed highway improvements, and ensure that there are no conflicts between each of the Utility Owner's relocation plans. The DB Team shall show all existing and proposed utilities on the cross sections and drainage profiles.

6.3.4 Utility Work Plans

The DB Team shall submit Utility Work Plans after the DB Team has reviewed and addressed internal comments on the Utility Adjustment Preliminary Plan. Utility Work Plans, whether furnished by the DB Team or by the Utility Owner, shall be signed and sealed by a Registered Professional Engineer (PE) in the State of Georgia.

6.3.4.1 Plans Prepared by the DB Team

Where the DB Team and the Utility Owner have agreed that the DB Team will furnish a Utility Adjustment design, the DB Team shall prepare and obtain the Utility Owner's approval of plans, specifications, and cost estimates for the Utility Adjustments (collectively, "Utility Work Plans") by having an authorized representative of the Utility Owner sign the plans as "reviewed and approved for construction." The Utility Work Plan (as approved by the Utility Owner) shall be attached to the applicable Utility Agreement., for GDOT's acceptance.

Unless otherwise specified in the applicable Utility Agreement(s), all changes to Utility Work Plan(s) previously approved by the Utility Owner (excluding estimates, if the Utility Owner is not responsible for any costs) shall require written Utility Owner approval. The DB Team shall transmit any GDOT comments to the Utility Owner, and shall coordinate any modification, re-approval by the Utility Owner and re-submittal to GDOT as necessary to obtain GDOT's acceptance.

6.3.4.2 Plans Prepared by the Utility Owner

For all Utility Adjustments to be furnished by a Utility Owner, the DB Team shall coordinate with the Utility Owner as necessary to confirm compliance with the applicable requirements. Those Utility Adjustments shall be attached to the applicable Utility Agreement, which the DB Team shall include in the appropriate Utility Work Plan for GDOT's acceptance. The DB Team shall transmit any GDOT comments to the Utility Owner, and shall coordinate any modification, review by the DB Team and re-submittal to GDOT as necessary to obtain GDOT's acceptance.

6.3.4.3 Design Documents

Each proposed Utility Adjustment shall be shown in the Design Documents, regardless of whether the Utility Work Plan is prepared by the DB Team or by the Utility Owner.

Required Information

a. Preliminary Utility Plans

1) Preliminary Utility Plan sheets are typically comprised of preliminary roadway plan sheets with the inclusion of all existing utility facility locations (overhead & underground) found within a Project's limits. The "degree of effort" exerted on the part of the Department and the Utility Owner varies with the type and location of the utility. The Department has classified these "degrees of effort" into different Quality Levels of information

2) Preliminary Utility Plans shall be produced and used by the DB Team in the utility coordination/relocation design activities outlined here. The following minimum information shall be shown on the Preliminary Utility Plans:

(a) Construction centerlines with Project stations and begin/end Project limits.

(b) Curb and gutter or edge of pavement (proposed and existing)

(c) Road and street names

(d) Existing and Required Right of Way limits, property lines, environmentally sensitive area limits, and property owners

(e) All proposed and existing easements (including existing utility easements)

(f) Proposed and existing drainage structures/features (excluding drainage text)

(g) Proposed construction limits (C/F lines)

(h) Topographical planimetrics (i.e. existing buildings/structures, existing tree/vegetation limits)

(i) All proposed bridges, walls, other structures and landscape hardscapes

(j) All proposed and existing strain poles (signal, sign, lighting)

(k) Utilities Legend

(l) Miscellaneous General Notes

(m) Existing overhead and underground utilities found within the Project's limits, Including size and material if known

(n) Sanitary sewer manhole top, and invert elevations. Sanitary Sewer pipe flow directions

(o) Railroad mainline and spur tracks with their respective property/easement limits

(p) Project Survey control point locations

b. Final Utility Plans

1) The Final Utility Plans shall clearly show all existing utilities on the plans and clearly indicate all existing utilities are "To Remain".

2) In addition to the information required for the Preliminary Utility Plans, the Final Utility Plans shall include: Miscellaneous General Notes required for coordination of utility facilities with roadway construction.

c. Overhead/Subsurface Utility Engineering (SUE) Investigations

The existing utility information provided in these definitions include a description of what "degree of confidence" there is in its accuracy. The Department has classified these "degrees of confidence" into different Quality Levels of information:

1) Quality Level "D" Information - Information obtained solely from a review of utility records and field verification. The comprehensiveness and accuracy of such information is highly limited. Even when existing information for a utility in a particular area is accurate, there are often other underground systems that are not shown on any records. Quality Level “D” may be appropriately used early in the development of a Project to determine the presence of utilities.

2) Quality Level "C" Information - Information obtained to augment Quality Level “D” information. This involves topographic surveying of visible, above-ground utility features (e.g., poles, hydrants, valve boxes, circuit breakers, etc.) and entering the topographic data into the CAD system. Since aerial utility lines are not surveyed, information provided for these facilities is considered Quality Level “C” also. Quality Level “C” may be appropriately used early in the development of a Project and shall provide better data than Quality Level “D” information alone. Designers shall be very cautious when working on Projects using information for underground utilities that is based only on Quality Levels “D” and “C” locates.

3) Quality Level "B" Information - Information obtained through the use of designating technologies (e.g., geophysical prospecting technologies). This is an application using scanning technologies, most of which have very specific capabilities. Applying a variety of techniques is essential to the process of preparing a comprehensive horizontal map of utilities and other underground structures on the site. Designating technologies are capable of providing good horizontal information.

4) Quality Level "A" (Test Hole) Information - Provides the highest level of accuracy of utility locations in three dimensions. This level may apply manual, mechanical or nondestructive (e.g., vacuum excavation) methods to physically expose utilities for measurement and data recording. Quality Levels “B”, “C”, and “D” locates are incorporated in Quality Level “A” locates.

Sheet Layout

a. The DB Team will ensure that any information and graphic data that is not necessary to depict the disposition of utilities found within the Project’s limits is removed by turning off the appropriate CAD levels(s) on which the data is stored. This will help ensure that information pertinent to utility facilities can be clearly seen in the Utility Plan sheets. Examples of extraneous information would be items such as horizontal curve data, superelevation data, roadway dimensions, misc. text, etc. All background information such as pavement limits,

existing structures, etc. shall be screened back. Also, the DB Team shall ensure all text, line work, details, and symbols are clear and legible when plans are reduced to 11"x17".

b. In order to maintain plan clarity all applicable general notes, tables, and the Utility Legend shall be placed separately from the Utility Plan sheets. A Utility Plan "Cover Sheet" shall be provided for both preliminary and final Utility Plans. A recommended example utility sheet schedule is provided below:

1) Utility Sheet 1 (Cover Sheet) – Utility General Notes, Utility Legend, Miscellaneous Details
2) Utility Sheet 2 (required as needed) – Additional Miscellaneous Details, Pole Data Table
3) Utility Plan Sheets – Utilities shown in plan view with respect to Project.
4) Utility Profile and Cross Sections Sheets - Proposed Utility facility profiles and cross sections (as required)
5) Miscellaneous Utilities Sheets – Miscellaneous proposed utility details (as required).

The above sheet schedule shall also be generally followed for all separate utility relocation plans (i.e. water & sewer plans) included in the Project plans.

Note on the Utility Plans whose responsibility it is for utility adjustment. For bridge plans required, the DB Team is to make sure the plans have made accommodations for utility crossings and attachments, if applicable. Any new utility crossings requests shall include the size, weight, and type of utility. In addition, the method of attachment to the bridge shall be fully detailed. Such requests shall be reviewed by the DB Team to ensure adequacy and constructability and final acceptance shall be obtained by the DB Team from the Department. The DB Team shall follow the approval process within this specification. The DB Team is responsible to ensure that all proposed and existing utilities are coordinated with the respective Project's Construction Staging Plans and Erosion Control Plans.

Upon completion of the Utility Relocation Plans, the DB Team will ensure that any additional environmental impacts due to utilities are addressed in the Project's environmental document/permit.

6.3.4.4 Certain Requirements for Underground Utilities

Casing as specified in GDOT's Utility Accommodation Policy and Standards Manual shall be used for all underground Utilities crossing the Existing ROW, Proposed ROW and/or Additional Properties.

Anytime underground operations, excavations or digging of any type is contemplated in the general area of the any utility facility, "Excavating" means any operation by which

the level or grade of land is changed or earth, rock, or other material below existing grade is moved and includes, without limitation, grading, trenching, digging, ditching, auguring, scraping, directional boring, and pile driving. The Georgia Utility Facility Protection Act (GUFPA) mandates that, before starting any mechanized digging or excavation work, you must contact Georgia 811 at least 48 hours, but no more than 10 working days, in advance to have utility lines marked. Damage and Emergency locate request may be called in 24 hours a day, seven days a week. The DB Team shall take reasonable action to determine the location of any underground utility facilities in and near the area for which signs are to be placed. In addition to establishing the approximate location of all utility facilities, the DB Team shall be required to fully expose the facility to verify its horizontal and vertical location, if underground operations are contemplated within the Tolerance Zone, which is defined to mean the approximate location of underground utility facilities defined as a strip of land at least 4 feet wide, but not wider than the width of the underground facility plus 2.0 feet on either side of the outside edge of such facility based upon the markings made by the locators. Excavation within the tolerance zone requires extra care and precaution. The DB Team shall avoid interference with underground utility facilities within the tolerance zone by utilizing such precautions that include, but are not limited to, hand excavation, vacuum excavation methods, and visually inspecting the excavation while in progress until clear of the existing marked facility. The DB Team shall provide, during and following excavation for placement of any signs, such support for existing underground utility facilities in and near the excavation as may be reasonably necessary for the protection of such facilities unless otherwise agreed to by GDOT and the Utility owner. The DB Team shall backfill all excavations in such manner and with such materials as may be reasonably necessary for the protection of existing underground utility facilities in and near the area of excavation or sign placement.

6.3.4.5 Utility Work Plan

Each Utility Adjustment (as well as each Utility remaining in place in the Facility ROW and not requiring any Protection in Place or other Utility Adjustment) shall be addressed in a Utility Work Plan prepared by the DB Team and submitted to GDOT for its review and acceptance. The Utility Work Plan is the combination of the Utility Plan and the Utility Adjustment Schedule. The DB Team shall provide Utility Work Plans for each individual Utility Owner and the Utility Work Plan shall be provided in accordance with the Utility Accommodations Policy and Standards Manual. The DB Team shall coordinate with the Utility Owner to prepare all components of each Utility Work Plan. Completion of the review and comment process for the applicable Utility Work Plan, as well as issuance of any required GDOT acceptances, shall be required before the start of construction for the affected Utility Adjustment Work.

Provisions governing the procedure for and timing of Utility Work Plan submittals are in Section 6.5 (Deliverables).

All Utility Adjustments covered by the same initial Utility Agreement shall be addressed in a single full Utility Work Plan.

Utility Work Plan Retention Requests: The DB Team shall prepare Utility Work Plan Retention Request for each Utility proposed to remain at its original location within the Existing ROW, Proposed ROW and limits of Additional Properties that is not required to be addressed in a Utility Agreement or for a group of such Utilities. Each Utility Work Plan Retention Request shall contain a transmittal memo recommending that the subject Utility(ies) remain in place, a completed Utility Work Plan Checklist, a certification from the Utility Owner approving leaving the Utility(ies) in place, as well as a Georgia Utility Permit and Affidavit(s) of Property Interest, if applicable.

Utility Adjustment Schedule (UAS)

The purpose of the UAS is to provide the DB Team with the pertinent information, including any utility staging required, dependent activities, or joint-use coordination that is required for the creation of a progress schedule chart that is feasible. Include the estimated duration for each of the applicable following tasks: Preliminary Engineering, Right-of-Way Acquisition, Construction Engineering, Material Procurement, Clearing and Trimming, Construction, Splicing or Tie-in work, Service Considerations and Temporary Work. A suitable UAS form is available from the Department for the WUCS to circulate to utility companies for any proposed Project construction staging. Ensure the WUCS submits the Progress Schedule Chart in accordance with the Contract and the proposed UAS from all utility companies to the Engineer for review and approval.

Scheduling Utility Adjustment Work

The DB Team is responsible for the scheduling of all utility relocations and adjustments. A written scheduled should be provided by the utility owner.

Revised Work Plan Acceptance - If previously unforeseen utility removal, relocation, or adjustment work is found necessary by the DB Team, the Utility or the DB Team after the start of construction of a project, the Utility shall provide a revised Work Plan within 30 calendar days after becoming aware of such work or upon receipt of the DB Team's written notification advising of such work. The incorporation of this revised Work Plan into the overall project schedule is not intended to correct errors and omissions with the original or current accepted Work Plans submitted to the Department. If such errors or omissions occur, it will be the Utility's responsibility to adhere to the original or current Work Plan submitted and approved. However, when it is deemed appropriate for a revised Work Plan to be submitted, the following procedure shall be followed for its acceptance: It is the responsibility of the DB Team to review all revised Work Plans submitted by the Utility found within a project's limits. After review and acceptance the revised Work Plan should be submitted to the District Utility Engineer for review and acceptance. Please note that the District Utilities Engineer will typically consult with the District Construction Office and GDOT Project Manager to determine the reasonability of such revised Work Plans. If, upon review, the District Utilities Engineer determines a revised Work Plan to be unreasonable based upon the required scope of utility adjustment and/or relocation required to accommodate a project, the District Utilities

Engineer will initiate the escalation process to resolve such disputes involving the revised Work Plan whenever they may occur.

Post-Let Utility Certification

Upon receipt of the accepted utility relocation plans and the Preliminary Utility Status Report, the DB Team will review and forward that information to the District Utility Engineer for review. The District Utility Engineer will review the information and forward to the State Pre-Construction Utility Engineer for final acceptance. The State Pre-Construction Utility Engineer will perform the post-let utility certification and issue notice to proceed (NTP 3) released for construction.

6.4 Construction

6.4.1 Reserved

6.4.2 General Construction Criteria

At the time the DB Team notifies the Department that the DB Team deems the Project to have reached Final Completion, the DB Team shall certify to the Department that all Utilities have been identified and that those Utility Owners with property interests or other claims related to relocation or coordination with the Project have been relocated or their claims otherwise satisfied or shall be satisfied by the DB Team.

In addition to the above, the DB Team shall comply with all provisions set forth under subsection 107.21 of the Georgia Department of Transportation's Specifications, Construction of Transportation Systems, current edition.

The DB Team shall be responsible for determining if the Department has agreed to a Project Framework Agreement (PFA) with Local Government or, additional Specific Activity Agreements (SAA) within the Project's limits (see the Department's Policies & Procedures(formerly known as TOPPS Policy #7120-3) for additional information). If the Department has approved a PFA or SAA; it is the DB Team's responsibility to assemble the necessary information including any Utility Agreements in a final and complete form and in such manner that the Department may accept the submittals with minimal review. Failure to submit such required Utility Agreements prior to the beginning of construction shall fully transfer the obligations, as stated in the subject PFA or SAA package, to the DB Team. Deductions to reimburse the Department for such obligations may be made from any current partial payment of the Lump Sum price.

All Utility Adjustment construction performed by the DB Team shall conform to the requirements listed below. If the Utility Owner chooses to perform their own relocations and the Utility Owner holds no property interest, the Utility Owner shall confirm in writing to the DB Team that the Utility Owner will relocate its own facilities at no cost to the DB Team. All construction engineering and contract supervision shall be the responsibility of the DB Team to ensure that all utility relocation work included in the contract is accomplished in accordance with the contract plans and specifications. The DB Team will consult with the Utility Owner before authorizing any changes which affect the Utility

Owners facilities. For work included in the DB Teams contract, the Utility Owner or Utility Owner's consultant shall have the right to visit and inspect the work at any time and advise the DB Team and GDOT of any observed discrepancies or potential issues. The DB Team will notify the Utility Owner when all utility relocation work is completed and ready for final inspection. Upon maintenance acceptance or final acceptance of the utility relocation included in the contract and upon certification by the Utility Owner that the work has been completed in accordance with the plans and specifications, the Utility Owner will accept the adjusted, relocated, and additional facilities. In addition, the DB Team is responsible for verifying that all Utility Adjustment construction performed by each Utility Owner conforms to the requirements described below. In case of nonconformance, the DB Team shall cause the Utility Owner (and/or its Contractors, as applicable) to complete all necessary corrective work or to otherwise take such steps as are necessary to conform to these requirements:

- All criteria identified in Section 6.3.2 (Technical Criteria and Performance Standards).
- The Utility Work Plan(s) included in the Utility Agreements approved by GDOT (other than Utility Adjustment Field Modifications complying with Section 6.4.7 (Utility Adjustment Field Modifications).
- All Facility safety and environmental requirements
- Overall Facility schedule or proposed Facility ROW schedule described in Section 7 (Right of Way).
- Ensure that the placed, abandoned, excavated or relocated within the project limits are all locatable. Locatable shall mean that the line can be field located using SUE QL-B methodology.

Depending on the provisions stipulated in the Memorandum of Understanding (MOU – see attached) between the Department and each Utility Owner the DB Team shall be responsible for one of the following construction activities:

- The DB Team shall be responsible for coordinating the construction work of its subcontractors and the various Utility Owners. The resolution of any conflicts between Utilities and the construction of the Project shall be the responsibility of the DB Team. No additional compensation will be allowed for any delays, inconveniences, or damage sustained by the DB Team or its subcontractors due to interference from utilities or the operation of relocating utilities.

- The DB Team shall be responsible for performing all utility removal, relocation, and adjustments required to accommodate the proposed Project. This shall include any required inspection, permitting, testing and monitoring to ensure that the work is properly performed to the certified design package. The resolution of any conflicts between Utilities and the construction of the Project shall be the responsibility of the DB Team. No additional compensation will be allowed for any delays, inconveniences, or damage sustained by the DB Team or its subcontractors due to interference from utilities or the operation of relocating utilities.

The DB Team shall be responsible for performing all utility removal, relocation, and adjustments required to accommodate the proposed Project. This shall include any required inspection, permitting, testing and monitoring to ensure that the work is properly performed to the certified design package. The resolution of any conflicts between Utilities and the construction of the Project shall be the responsibility of the DB Team. No additional compensation will be allowed for any delays, inconveniences, or damage sustained by the DB Team or its subcontractor due to interference from utilities or the operation of relocating utilities.

6.4.3 Inspection of Utility Owner Construction

The DB Team shall set forth procedures for inspection of all Utility Adjustment Work performed by Utility Owners (and/or their Contractors) to verify compliance with the applicable requirements described in Section 6.4.2 (General Construction Criteria).

6.4.4 Scheduling Utility Adjustment Work

The Utility Adjustment Work (other than construction) may begin at any time following issuance of NTP 1. Refer to Section 7.6.2 of the Agreement for the conditions to commencement of Utility Adjustment Construction Work by the DB Team. The DB Team shall not arrange for any Utility Owner to begin any demolition, removal, or other construction Work for any Utility Adjustment until all of the following conditions is satisfied:

- The Utility Adjustment is covered by an executed Utility Agreement (and any conditions to commencement of such activities that are included in the Utility Agreement have been satisfied)
- Availability and access to affected Replacement Utility Property Interests have been obtained by the Utility Owner (and provided to the DB Team, if applicable)
- If any part of the Utility Adjustment Construction Work will affect the Existing ROW, Proposed ROW and/or Additional Properties, availability and access to that portion of the Existing ROW. Proposed ROW and/or Additional Properties have been obtained in accordance with the applicable requirements of the DB Documents
- If applicable, the Alternate Procedure List has been approved by FHWA, and either (a) the affected Utility is on the approved Alternate Procedure List, as supplemented, or (b) the Utility Owner is on the approved Alternate Procedure List, as supplemented
- The review and comment process has been completed and required approvals have been obtained for the Utility Work Plan covering the Utility Adjustment.
- All Governmental Approvals necessary for the Utility Adjustment construction have been obtained, and any pre-construction requirements contained in those Governmental Approvals have been satisfied
- All other conditions to that Work stated in the DB Documents have been satisfied

6.4.5 Standard of Care Regarding Utilities

The DB Team shall carefully and skillfully carry out all Work impacting Utilities and shall mark, support, secure, exercise care, and otherwise act to avoid damage to Utilities in accordance with O.C.G.A. 25-9 (The Georgia Utility Protection Act). At the completion of the Work, the condition of all Utilities shall be at least as safe and permanent as before.

6.4.6 Emergency Procedures

Emergency Response Plan: The WUCS shall prepare and submit to the Department an Emergency Response Plan no later than 30 days prior to beginning construction. The WUCS shall clearly mark and highlight the gas, water and other pressurized pipeline shut-off valves and other utility services including overhead switch locations on the utility plans; and prepare a chart to indicate the location of each site (Street address or intersections), the utility company or operator of the facility with emergency contact information and the working condition of the device to facilitate prompt shut-off. The WUCS shall post the Emergency Response Plan in an area readily accessible to the Department. In the event of interruption to gas, water or other utility services as a result of accidental breakage or as a result of being exposed or unsupported, the WUCS shall promptly notify the appropriate emergency officials, the Georgia Utilities Protection Center and the appropriate utility facility company or operator, if known. Until such time as the damage has been repaired, no person shall engage in excavating or blasting activities that may cause further damage to the utility facility.

6.4.7 Switch Over to New Facilities

After a newly Adjusted Utility has been accepted by the Utility Owner and is otherwise ready to be placed in service, the DB Team shall coordinate with the Utility Owner regarding the procedure and timing for placing the newly Adjusted Utility into service and terminating service at the Utility being replaced.

6.4.8 Traffic Control

The DB Team shall be responsible for, and the Construction Traffic Control Plan shall cover, all traffic control made necessary by for Utility Adjustment Work, whether performed by the DB Team or by the Utility Owner. Traffic control for Adjustments shall be coordinated with GDOT. Traffic control shall comply with the guidelines of the Manual of Traffic Control Devices (MUTCD), current edition, and of Section 18 (Traffic Control).

6.5 Deliverables

The DB Team shall time all Submittals described in this Section 6 to meet the Project Baseline Schedule, taking into account GDOT's applicable review and response times designated in this Section 6, or if not stated therein, then as stated in Article 6.3 of the Design-Build Agreement (Volume 1).

The DB Team will provide to GDOT concurrently with accepted construction as-built plans, one full sized, three half sized, one PDF and one MicroStation copy for review. GDOT will have 30 days to review and return accepted or with comments. DB Team will address any comments and return to GDOT for final review and acceptance. Upon GDOT review and acceptance, the DB Team will provide a copy of the accepted final as-built plans to all utility owners who's utility relocation work was included in the contract.

6.5.1 Utility Work Plan Submittals

DB Team shall coordinate all Submittals required pursuant to this Section 6.5, so as not to overburden GDOT's staff and consultants.

(i) DB Team shall transmit any GDOT comments to the Utility Owner, and shall coordinate any modification, review and approval by the Utility Owner and re-submittal to GDOT, as necessary to resolve all GDOT comments and/or obtain GDOT's acceptance, as applicable. Upon (i) GDOT's acceptance of any Utility Work Plan components for which GDOT's acceptance is required, and (ii) completion of the review and comment process for all other Utility Work Plan components, GDOT will sign three originals of any approved Georgia Utility Permit and of any other components of the Utility Work Plan for which this Section 6 requires GDOT's signature.

6.5.2 Preliminary Utility Status Report

The DB Team shall prepare and submit to the Department a Preliminary Utility Status Report Concurrently with Accepted Relocated Utility Plans within 180 days after Notice to Proceed 1 has been given for the contract (see TABLE 6-1: REVIEWS). This report shall include a listing of all Utility Owners located within the Project limits and a recommendation as to the extent of each Utility Owner's property interests. This report shall include copies of easements, plans, or other supporting documentation that substantiates any property interests of the Utility Owners. The report shall a listing of each utility with contact information, agreements, current UIA and a preliminary assessment of the impact to each Utility Owner.

6.5.3 Subsurface Utility Engineering (SUE) Requirements

The DB Team shall compile, and submit to the Department all SUE deliverables, Utility Relocation Plans, SUE Utility Impact Analysis, Utility Adjustment Schedules, Utility Agreements, Utility Estimates (if estimates are provided by the utility owners), and Letters of "no conflict," as set forth above for the Project. The DB Team is expected to assemble the information included in the Utility Agreements and Utility Relocation Plans in a final and complete form and in such a manner that the Department may accept the submittals with minimal review. The Utility Owners shall not begin their Utility Relocation work until authorized in writing by the Department.

Each Utility Agreement and Utility Relocation Plan submitted shall be accompanied by a certification from the DB Team stating that the proposed relocation will not conflict with

the proposed highway improvement and will not conflict with another Utility Owner's relocation plan.

6.5.4 Utility As-Builts Requirements

a. It shall be the responsibility of the DB Team's 3.10 Utility Coordination Consultant to manage and ensure accurate completion and delivery of all items within this section.

b. Utility as-builts must be completed after utility relocations are completed and prior to project closeout.

c. Provide Utility as-built plans in MicroStation V-8 or Inroads or the Department's current CAD Software format to include each individual utility owner within the project limits.

d. Provide one (1) final full size, four (4) half size, and one (1) pdf set of as-built utility plans to the Department to include all utilities present, abandoned or relocated within the project limits. Provide respective Utility Owners whose work was included in the contract a copy of their as-builts for review and acceptance.

e. Ensure as-built utility plans for projects contain the following:

    1. Name
    2. Address
    3. Telephone number of the firm preparing the drawing
    4. Date the as-built plan data is collected via the revision block
    5. Surveyor's/Engineer's statement certifying that as-built plans reflect the true conditions in the field
    6. DB Teams' statement (with an original signature and Project Number on the cover sheet and transmittal letter) verifying that all construction specifications and product qualities have been met
    7. Label "AS-BUILT DRAWING" or "RECORD DRAWING" on each sheet
    8. Label all Street names
    9. Label all easements and right-of-ways
    10. Identify and label the location and elevation of the benchmark referenced (If the referenced benchmark is not within the project limits, then a complete description of its location will be provided to assist in future locating).
    11. Label any changes in details of design and/or additional supporting information such as approved placement details, pipe sizes, material changes, geo-coded photos, etc.

f. Ensure the as-built plans provide detailed and accurate information, in a useful format. Discretion must be employed by the draftsperson regarding the functional quality of the plans. If too much information is included on one sheet as to make their use impractical, a second, or third, drawing sheet may be necessary.

g. Survey all underground utilities that are placed, abandoned, excavated or relocated within the project limits to determine the exact location and position of the utility line. Utilities are defined as any communication, electrical, gas and water and sewer lines. This will include all ITS/ATMS, Fiber Optic, communication and electrical lines. This should include, but not limited to outside diameter of pipe or width of duct banks and configuration of non-encased multi-conduit systems, utility structure material compositions and condition; as well as identification of benchmarks used to determine elevations. Ensure elevations have an accuracy of +/- 0.05-ft and certified accurate to the benchmarks used to determine elevations. Horizontal data accurate to within +/- 0.2 ft. or applicable survey standards, whichever is more precise. Record and label the average depth below the surface of each run, all change of direction points, and all surface or underground components such as valves, manholes, drop inlets, clean outs, meters, etc.

h. For relocated aerial facilities:

    1. Record the following information to including but not be limited to the pole owner, age, pole size, pole height, pole number, the material type, the general condition of the utility.

    2. Record the horizontal location of existing poles for aerial utility facilities. Ensure horizontal surveying of existing poles for overhead utility facilities is surveyed to the same accuracies and precision as is required for the topographic data.

    3. Determine the aerial utility owners (in addition to the pole owner) attached to the pole and correctly show the horizontal connectivity of the utilities between the poles, including major service drops (substations or industrial facilities).

    4. Aerial utilities along with pole locations and appurtenances shall be returned to the DEPARTMENT in digital and reproducible certified plan sheet format.

i. Submit completed electronic files and reproducible as-built utility plan sheets to the Engineer for review and comments. Revise and make changes or adjustments to the utility related data as necessary. Work will not be considered complete until the DB Team has responded to the comments from this review to the satisfaction of the Engineer.

j. Assemble and present as-built plans in a format compatible with the DEPARTMENT'S current CAD systems (Microstation and InRoads) for use by the DEPARTMENT'S staff and ensure the Microstation and InRoads files are

developed in accordance with the DEPARTMENT'S current Electronic Utility File Guidelines.

For each utility facility/owner, prepare and deliver one copy of the "as-built" or "record" plan to the DEPARTMENT. There shall be an “as-built” or “record” for each utility on the project, whether the utility work is included in the contract price, or the utility work is performed by the utility owner or the utility’s DB Team.

7 RIGHT OF WAY (ROW) – ADDITIONAL PROPERTIES

7.1 General Requirements

DB Team's obligations with respect to the acquisition of Additional Properties are set forth in Article 2 of the Design-Build Agreement (Volume 1), the requirements of the Technical Provisions, and Volume 3 Manuals.

Additional Properties that require acquisition in addition to the Existing ROW owned by GDOT and RequiredROW as shown in the NEPA/GEPA and provided in the approved environmental document must be approved by GDOT and FHWA, if applicable, by a NEPA/GEPA re-evaluation. All cost to acquire Additional Properties shall be paid for by the DB Team and fully reimbursable to GDOT for actual costs to acquire. This Section 7 sets forth the ROW acquisition activities for only Additional Properties that will be provided by the DB Team and designates the ROW acquisition activities GDOT will conduct. The DB Team shall provide all engineering and ROW documents necessary to acquire title for Additional Properties, in form and substance acceptable to GDOT, in the name of the Georgia Department of Transportation; relocation of displacees; and clearance/demolition of the improvements from the Additional Properties, as more fully described in the following sub-sections.

7.2 Administrative Requirements

7.2.1 Revised ROW Acquisition Plan - Additional Property Submittals

DB Team shall prepare a plat and legal description for Additional Properties needed in accordance with the requirements of this Section 7. The DB Team shall revise the Existing and Proposed ROW Plan (Exhibit 4 of the Agreement) and shall submit within thirty (30) days from the Issuance of NTP 1. No acquisition activities by GDOT can begin until the the DB Team revised Existing and Proposed ROW Plan (Exhibit 4 of the Agreement) is accepted by GDOT, and if required FHWA and the NEPA Reevaluation is approved by FHWA. The review period for any proposed revised Existing and Proposed ROW plan is thirty (30) Days. The review period for any proposed parcel plat, appraisal, and legal description for any Additional Properties shall be fourteen (14) Days. Multiple parcel packages submittal (parcel plat, appraisal, legal description, and any other requirements in the DB Agreement) will be accepted as part of one review period of fourteen (14) Days as long as the submittal includes no more than ten (10) parcels for GDOT review. The next submittal review will not begin until any previous submittal package has been completed and returned to the DB Team.

The revised Existing and Proposed ROW Plan for Additional Properties shall be coordinated with the development of the Construction Phasing Plan (see Section 23). The DB Team's Preliminary Baseline Schedule and the Project Baseline Schedule must account for all newly proposed parcel acquisition and provide a Schedule Activity for each parcel. The DB Team shall provide time in the schedule for a maximum of fifteen

(15) months from the time the parcel package or any submittal is accepted by GDOT. The NEPA Reevaluation shall be approved before GDOT to commence acquisition activities for any parcel.

DB Team shall provide information of all proposed and final acquisition requirements, including but not limited to, temporary easements, permanent easements, full takes, or leased property for construction means and methods by the DB Team.

7.2.2 DB Team's ROW Properties Scope of Services

DB Team shall reimburse GDOT for all administrative activities and preparation of all documentation sufficient to acquire Additional Properties.

Upon DB Team request to GDOT to acquire any parcel, GDOT will request that the Office of Georgia Attorney General conduct the title work, closings, condemnations, and any necessary legal activities. The DB Team shall reimburse GDOT within thirty (30) days of receipt of the invoice from GDOT for the cost GDOT will pay the Office of Georgia Attorney General for its services.

DB Team shall not begin construction on any parcel of real estate unless property rights for the parcel have been obtained and recorded in favor of GDOT and possession has occurred. ROW Properties possession may be by use of Right of Entry (ROE) as may be granted by certain Governmental Entities, and/or certain Public Utilities provider owned parcels, and as accepted only by GDOT on a case by case basis.

7.2.3 Requirements of DB Team

DB Team's services to be provided with respect to the acquisition of the ROW Properties shall include, but are not limited to the following:

- Appraisals
- Environmental due diligence
- Letter from DB Team's design engineer certifying that the required ROW Properties acquisition is necessary and that any proposed alternatives are not feasible (*unless otherwise authorized by GDOT*)

7.2.4 DB Team Conflict of Interest

If at any time, DB Team or to the best of DB Team's knowledge, any DB Team-Related Entity directly or indirectly (i) acquires or has previously acquired any interest in real property likely to be parcels of the Additional Properties or the remainders of any such parcels; (ii) loans or has previously loaned money to any interest holder in any real property likely to be a parcel and accepts as security for such loan the parcel, or the remainder of any such parcel that is not a whole acquisition, or (iii) purchases or has previously purchased from an existing mortgagee the mortgage instrument that secures an existing loan against real property likely to be a parcel, or the remainder of any such parcel, DB Team shall promptly disclose the same to GDOT. In the case of

acquisitions, loans or mortgage purchases that occurred prior to the execution of the Agreement, such disclosure shall be made within fourteen (14) Days after execution of the Agreement.

In the event that DB Team, or any subsidiary or parent company of DB Team, acquires a real property interest, whether title or mortgage, in parcels of the real property interest acquired, or a release of mortgage as the case may be, shall be conveyed to the State of Georgia without the necessity of eminent domain.

DB Team shall not acquire or permit the acquisition by the DB Team or any DB Team-Related Entity of any real property interest in a parcel, whether in fee title or mortgage, for the purpose of avoiding compliance with the Laws, practices, guidelines, procedures and methods described in Section 7.2.1 and/or to gain an advantage over any competing interest of the DB Team.

7.2.5 Meetings

DB Team shall attend meetings as requested by GDOT. Meeting may include, but are not limited to property owner meetings and property acquisition status meetings. At such meetings DB Team shall provide exhibits, take minutes, and distribute minutes, as requested by GDOT, within five (5) calendar Days of the meeting. Minutes will not be finalized until an adequate comment period has been allowed.

7.2.6 Documentation and Reporting

All documentation relating to the activities in Section 7.2.5 shall be transmitted to GDOT within five (5) Days of taking place. Responsibilities of DB Team:

As set forth in, Article 2 Section 2.2.3.2 of the Design-Build Agreement (Volume 1) and as more fully described in this Section 7, DB Team shall be responsible for the reimbursement to GDOT for costs of all services and preparation of all documentation for all Additional Properties.

DB Team shall also be responsible for the costs of acquisition and documentation for the acquisition of any temporary right or interest in Project Specific Locations not necessary for the Project but that DB Team deems advisable for contractor preferred areas such as Project office requirements lay-down areas, material storage areas, borrow sites, or any other convenience of DB Team. The DB Team entering into negotiations with a property owner to use their property within Project Specific Locations or outside of the acquisition limits for mobile work trailers, storage, equipment, etc. will be strictly between the DB Team and the property owner and is to in no way to affect the negotiations of any parcel acquisition required for the Project. GDOT shall not be obligated to exercise its power of eminent domain in connection with DB Team's acquisition of any such temporary right or interest, and GDOT shall have no obligations or responsibilities with respect to the acquisition, maintenance or disposition of such temporary rights or interests.

7.2.7 Responsibilities of GDOT

GDOT shall be responsible for the activities set forth in the Section 7, in connection with acquisition of Additional Properties:

7.2.8 Responsibilities of the Office of Georgia Attorney General

The parties hereto acknowledge the statutory requirements that the Office of Georgia Attorney General has exclusive authority to represent and defend GDOT. In its role as attorney for GDOT, the Office of Georgia Attorney General has the responsibility to:

- Represent GDOT in all condemnation and eviction proceedings.
- Coordination with GDOT on all legal matters concerning acquisition processes, including all negotiated legal settlements.
- Analyze recommended parcel values and/or appraisal issues.
- Provide additional legal advice and opinions as needed by GDOT.
- Jury trials including determination of expert witnesses and all appeals.
- Preparation, obtaining, and filing of all necessary legal documentation for eviction of property owners or tenants.
- Prepare preliminary and final title opinions.
- Conduct all closing activities.

7.3 Reserved

7.4 Reserved

7.4.1 Reserved

7.4.2 Property Fencing

In connection with fencing, DB Team shall comply with *GDOT Policy and the 2009 International Building Code – 2009 Edition – International Code Council*, as well as, the specifications found in the current version of GDOT's *Standard Specifications for Construction of Highways, Streets and Bridges*, and any Supplemental Specifications. DB Team shall also comply with section 3.7 of GDOT's Design Policy Manual on fencing. Fencing standards for DB Team provided fencing shall conform to the overall aesthetics requirements found elsewhere in these DB Documents and referenced standards. All fencing not covered by the GDOT specification to be installed by DB Team shall be replaced in kind or as agreed upon during the right of way negotiations and preapproved by GDOT prior to installation.

7.5 Access to the Work

Following NTP 1, the DB Team shall be afforded access to the Property, provided that for any Proposed Right of Way, DB Team shall not have access to use of certain parcels, such parcels identified in Volume 2.

8 GEOTECHNICAL

8.1 General Requirements

DB Team shall perform all geotechnical investigations, testing, research, and analysis necessary to effectively determine and understand the existing surface and subsurface geotechnical conditions of the Existing ROW, Required ROW or Additional Properties to be used by the DB Team to carry out the Work. DB Team shall ensure the geotechnical investigations and analyses are both thorough and complete, so as to provide accurate information for the design of roadways, pavements, foundations, structures, and other facilities that result in a Project that is safe, and meets operational standards. The DB Team shall design the Project in general conformance with GDOT policies, guidelines, and Volume 3 Manuals.

8.2 Design Requirements

8.2.1 Subsurface Geotechnical Investigation by DB Team

DB Team shall determine the specific locations, frequency, and scope of all subsurface geotechnical investigations, testing, research, and any additional analysis the DB Team considers necessary to provide a safe and reliable roadway, pavement, foundation, structure, and other facilities for the Project.

DB Team shall prepare and amend, as needed, Geotechnical Engineering Reports documenting the assumptions, conditions, and results of the geotechnical investigation and analysis, including the following:

- The geology of the Project area, including soil and/or rock types, and drainage characteristics.
- Field investigations and laboratory test results used to characterize conditions, including moisture content, plasticity index, gradations for each major soil strata change, levels of shrink/swell potential soil compressibility, and short-term and long-term strength tests and properties.
- A discussion of conditions and results with reference to specific locations on the Project.
- Design and construction parameters resulting from the geotechnical investigation and analysis, including parameters for the design of pavements, pipes, structures, slopes, and embankments.
- Plan view locations of field sampling, boring logs and other field data, laboratory test results, calculations, and analyses that support design decisions.
- Include the slope stability analysis for embankment and excavation slopes including both short-term (undrained) and long-term (drained) conditions, and discussion of design measures undertaken to ensure stability and safety of all slopes. The analysis shall consider the potential for long-term surficial slide

failures common to high plasticity clays in Georgia, and specific recommendations shall be provided to minimize their occurrence.

Each Geotechnical Engineering Report, upon completion, shall be submitted to GDOT for review and comment as a Submittal.

If environmentally-sensitive conditions such as undocumented contaminated soil or archaeological sites are encountered during the subsurface exploration activities, DB Team shall notify GDOT and for hazardous materials follow the requirements GDOT Standard Specification 107.22.

8.2.2 Pavement Design

DB Team shall construct and maintain roadway pavements in conformance to *GDOT's Pavement Design Manual and* GDOT policies and procedures*.* DB Team shall follow the required minimum pavement design provided in Volume 2, Section 11.2.2.

If Pavement Design has not been previously approved by GDOT, then the DB Team shall prepare a pavement design report that confirms or revises the required minimum pavement design provided in Volume 2, Section 11.2.2. The pavement design report shall document the assumptions, considerations, and decisions contributing to the Project's pavement design and meet all requirements of the *GDOT's Pavement Design Manual*.:

For roadways adjacent to and crossing the Project that are disturbed by the construction activities of the Project, DB Team shall, at a minimum, match the in-place surface type and structure of the existing roadways. In addition, all new shoulders shall be constructed as full depth shoulders. DB Team shall design all tie-in Work to avoid differential settlement between the existing and new surfaces.

DB Team shall coordinate the design and construction of all cross roads with the Governmental Entity having jurisdiction whether a municipality, county, or GDOT.

8.3 Construction

Materials used to construct the Project shall meet the minimum requirement as specified in GDOT specifications, policies and procedures, guidelines, and Volume 3 Manuals. All materials used to construct the Project shall conform to the requirements of the GDOT Qualified Products List (QPL) or equivalent as approved by GDOT. Testing of materials shall be performed by personnel possessing the requisite GDOT materials certifications.

The DB Team shall be responsible for obtaining and complying with all Governmental Approvals for construction of the Project.

The DB Team shall submit to GDOT for review and acceptance any blasting plan(s). Blasting shall be performed in accordance with State Law, and in accordance with GDOT's specifications, policies and procedures.

8.4 Deliverables

Deliverables shall include Geotechnical Engineering Reports as described in Section 8.2.1, and pavement design reports as described in Section 8.2.2. All deliverables shall conform to the standards required in the Quality Management Plan including timely submittal of all documents.

All deliverables shall be presented to GDOT in both hard-copy, and electronic form compatible with GDOT software. All reports shall be signed and sealed by the responsible Registered Professional Engineer. Each report shall be accompanied by documentation that the report has completed all aspects of the Quality Management Plan including all reviews and acceptances.

9 SURVEYING AND MAPPING

9.1 General Requirements

The DB Team shall provide accurate and consistent land surveying and mapping necessary to support ROW acquisition, design, and construction of the Project. The DB Team is responsible for all surveying responsibilities in accordance with the GDOT *Automated Survey Manual*.

The DB Team shall review existing survey data and determine the requirements for updating or extending the existing survey and mapping data. The DB Team is responsible for the final precision, accuracy, and comprehensiveness of all survey and mapping.

The DB Team shall provide surveying and mapping activities in conformance with GDOT policies, guidelines, and Volume 3 Manuals.

9.2 Administrative Requirements

9.2.1 Property Owner Notification

The DB Team shall prepare for GDOT review and acceptance a property owner notification letter in accordance with the *GDOT Automated Survey Manual* prior to entering any private property outside the Existing ROW.

9.3 Design Requirements

9.3.1 Units

All survey Work shall be performed in U.S survey feet. Work shall conform to state plane coordinates.

The combined sea level and scale factor for the Project shall conform to the *GDOT Automated Survey Manual*.

9.3.2 Survey Control Requirements

The DB Team shall ensure that all surveying conforms to all applicable surveying laws and the *Georgia Professional Land Surveying Practices Act* and shall follow the *General Rules of Procedures and Practices* of the Georgia Board of Professional Engineers and Land Surveying. DB Team shall ensure that any person in charge of the survey is proficient in the technical aspects of surveying, and is a Registered Professional Land Surveyor licensed in the State of Georgia.

The DB Team shall establish all horizontal and vertical primary Project control from approved control provided by GDOT. If the DB Team chooses to use GPS methods,

the DB Team shall meet the guidelines as defined in the *GDOT Automated Survey Manual*.

The DB Team shall establish and maintain additional survey control as needed and final ROW monumentation throughout the duration of the Project.

The DB Team shall tie any additional horizontal and vertical control for the Project to the established primary Project control network.

All survey control points shall be set and/or verified by a Registered Professional Land Surveyor licensed in the State of Georgia.

The DB Team shall establish and maintain a permanent horizontal and vertical primary survey control network. The control network should consist of, at minimum, horizontal deltas coordinated and elevated set in intervisible pairs at spacing of no greater than three (3) miles. Control monuments set by the DB Team shall be installed per the National Geodetic Survey (NGS) guidelines (*National Geodetic Survey July 1996*). The horizontal deltas shall be installed per the *GDOT Automated Survey Manual*. Prior to construction, the DB Team in coordination with GDOT shall provide NOAA no less than a 90-day notification of planned activities that will disturb or destroy any geodetic control monuments. This will provide time to plan for and execute relocation of geodetic monuments. DB Team shall replace all existing horizontal and vertical primary survey control points disturbed or destroyed. DB Team shall make all survey computations and observations necessary to establish the exact position and elevation of all other control points based on the primary survey control.

The DB Team shall deliver to GDOT a survey control package in accordance with the *GDOT Automated Survey Manual*. In addition, DB Team shall deliver to GDOT a revised survey control package when survey monuments or control points are disturbed, destroyed or found to be in error.

9.3.3 Conventional Method (Horizontal & Vertical)

If the DB Team chooses to use conventional methods to establish additional horizontal control, the DB Team shall meet the accuracy of the appropriate level of survey as defined in the *GDOT Automated Survey Manual*.

9.3.3.1 Horizontal Accuracy Requirements for Conventional Surveys

Horizontal control is to be established (at a minimum) on the Georgia State Plane Coordinate System of 1985[NAD83 or GCS 85].

Upon request by the DB Team, GDOT will compile and provide to DB Team a survey control package of existing GDOT approved survey monumented data in the Project vicinity.

9.3.3.2 Vertical Accuracy Requirements for Conventional Surveys

Vertical control shall be established on the North American Vertical Datum of 1988 (NAVD 1988).

Table 9-1

	1st Order	**2nd Order**	**3rd Order**	**Remarks And Formulae**
Error of Closure	0.013 feet $\sqrt{M}$	0.026 feet $\sqrt{M}$	0.049 feet $\sqrt{M}$	Loop or between control monuments
Maximum Length of Sight	250 feet	300 feet		With good atmospheric conditions
Difference in Foresight and Backsight Distances	±10 feet	±20 feet	±30 feet	Per instrument set up
Total Difference in Foresight and Backsight Distances	±20 feet per second	±50 feet per second	±70 feet per second	Per total section or loop
Recommended Length of Section or Loop	2.0 miles	3.0 miles	4.0 miles	Maximum distance before closing or in loop
Maximum Recommended Distance Between Benchmarks	2000 feet	2500 feet	3000 feet	Permanent or temporary benchmarks set or observed along the route
Level Rod Reading	± 0.001 foot	± 0.001 foot	± 0.001 foot	
Recommended Instruments and Leveling Rods	Automatic or tilting w/ parallel plate micrometer precise rods	Automatic or tilting w/ optical micrometer precise rods	Automatic or quality spirit standard, quality rod	When two or more level rods are used, they should be identically matched

Principal Uses	Broad area control, subsidence or motion studies jig & tool settings	Broad area control, engineering projects basis for subsequent level work	Small area control, drainage studies, some construction and engineering	

9.3.4 Reserved

9.3.5 Right of Way Surveys

The DB Team shall base all surveys on the primary horizontal and vertical control network established for the Project.

9.3.5.1 Accuracy Standard

In performing ROW surveys consisting of boundary locations, the DB Team shall meet the accuracy standards of the appropriate level of survey as defined in the following table.

Table 9-2: Chart of Tolerances

	Urban / Rural	**Urban Business District**	**Remarks and Formulae**
Error of Closure	1:10,000	1:15,000	Loop or between Control Monuments
Angular Closure	15” $\sqrt{N}$	10” $\sqrt{N}$	N = Number of Angles in Traverse
Accuracy of Bearing in Relation to Source *	20 “	15 “	Sin α = denominator in error of closure divided into 1 (approx.)
Linear Distance Accuracy	0.1 foot per 1,000 feet	0.05 foot per 1,000 feet	Sin α x 1000 (approx.) where ± = Accuracy of Bearing
Positional Error of any Monument	*AC*/10,000	*AC*/15,000	*AC* = length of any course in traverse
Adjusted Mathematical Closure of Survey (No Less Than)	1:50,000	1:50,000	

* GDOT policy requires all bearings or angles be based on the following source: Grid bearing of the Georgia Coordinate System of 1985, with the proper zone and epoch specified.

9.3.6 Survey Records and Reports

The DB Team may use electronic field books to collect and store raw data. The DB Team shall preserve original raw data and document any changes or corrections made to field data, such as station name, height of instrument, or target. The DB Team shall also preserve raw and corrected field data in hardcopy output forms in a similar manner to conventional field books for preservation.

Field survey data and sketches that cannot be efficiently recorded in the electronic field Volume shall be recorded in a field note Volume and stored with copies of the electronic data.

All field notes shall be recorded in permanently bound books. (Loose leaf field notes will not be allowed.) The DB Team shall deliver copies of any or all field note Volumes to GDOT upon request.

9.4 Construction Requirements

9.4.1 Units

Comply with the Design Requirements in Section 9.3.

9.4.2 Construction Surveys

Comply with the Design Requirements in Section 9.3.

9.5 Deliverables

9.5.1 Final ROW Surveying and Mapping

The documents produced by the Surveyor, or the Surveyor's subcontractors, are the property of GDOT, and release of any such document shall be approved by GDOT.

All topographic mapping created by the DB Team shall be provided to GDOT in digital terrain model format using the software and version thereof being used by GDOT at the time of delivery.

9.5.2 ROW Monuments

Upon completion of the ROW acquisition and all Construction Work, such that the Final ROW Lines will not be disturbed by construction, the DB Team shall set permanent and stable concrete ROW monuments (constructed according to current GDOT specifications) located on the final ROW line at all points of curvature (PCs), points of tangency (PTs), points of intersection (PIs), miters and breaks, points of compound curvature (PCCs), points of reverse curvature (PRCs), and all intersecting crossroad ROW lines. In addition, the DB Team shall set permanent and stable concrete ROW monuments (constructed according to current GDOT specifications) located on all final

ROW lines where the distance between such significant ROW line points exceeds fifteen hundred (1,500) feet.

The DB Team shall purchase all materials, supplies, and other items necessary for proper survey monumentation.

10 GRADING

10.1 General

DB Team shall conduct all Work necessary to meet the requirements of grading, including clearing and grubbing, excavation and embankment, removal of existing buildings, pavement and miscellaneous structures, subgrade preparation and stabilization, dust control, aggregate surfacing and earth shouldering, in accordance with Volume 3 Manuals (Technical Documents).

Borrow, Stockpile, and Waste Sites: All borrow and waste sites for this project shall be environmentally approved prior to construction activities occurring in them. All common fill or excess material disposed outside the project right of way shall be placed in either a permitted solid waste facility, a permitted inert waste landfill or in an engineered fill. See Section 201 of the Standard Specification and Supplements thereto for additional information.

There is no suitable place to bury existing construction debris within the project's limits. The Contractor shall provide an environmentally approved site to dispose of existing construction debris at no additional cost to the Department.

Any features that are abandoned in place, e.g.; parking lots, abandoned pavements, sidewalks, driveways, catch basins, drop inlets, pipes, manholes, curbing, retaining walls, utilities, foundations, paved floors, underground tanks, fences, bridges, buildings, and other incidental structures shall be removed to the following depths:

Abandon Pavements: Ensure existing pavement inside the Project Limits no longer being used is obliterated, graded to drain, and grassed.

Abandon Pipes: Ensure abandoned pipes that are left in place are grout filled or filled with flowable fill.

Under Pavements: Remove to a depth of at least three (3) feet below the finished subgrade elevation.

Underneath Other Structures: Remove to at least three (3) feet below the foundations of any proposed structure, including installations such as guard rail posts and utility poles.

Elsewhere in the Right of Way and easement areas: Remove as follows: Remove to at least three (3) feet below the finished surface of slopes and shoulders and one (1) foot below natural ground outside construction lines.

Thoroughly crack or break abandoned structures that may impound water. These structures include but are not limited to concrete floors, basements, and catch basins within ten (10) feet of finished grade.

Break floors so that no section greater than ten (10) square feet remains intact.

10.2 Preparation within Project Limits

DB Team shall develop, implement, and maintain, for the Term, a Demolition and Abandonment Plan for all existing structures, features, and utilities as described in 10.1 above (types and sizes) that will be removed, abandoned or partially abandoned during the Term. The plan shall ensure that said structures are structurally sound after the abandonment procedure. The plan should show the locations of all existing features as listed in Section 10.1 that will be abandoned and the plan should show sufficient detail for the abandonment.

GDOT reserves the right to require DB Team, at any time to salvage equipment in an undamaged condition and deliver to a location designated by GDOT within the GDOT District in which the Project is located, any GDOT-owned equipment and materials in an undamaged condition. GDOT shall have first right of refusal to retain any salvage material or equipment. If GDOT decides not to salvage the material or equipment the DB Team may take possession but not reuse for the Project. All material incorporated into the Project shall be new.

The material from structures designated for demolition shall be DB Team's property. All material removed shall be properly disposed of by DB Team outside the limits of the Project.

10.3 Slopes and Topsoil

DB Team shall comply with Volume 3 Manuals regarding design limitations and roadside safety guidelines associated with the design of slopes along roadways. DB Team shall adjust grading to avoid and minimize disturbance to the identified waters of the U.S. DB Teams grading plan shall be in accordance with the approved NEPA/GEPA documents however the DB Team shall secure all associated Governmental Approvals to meet the Released for Construction(RFC) plans.

DB Team shall perform finished grading and place topsoil in all areas suitable for vegetative slope stabilization (and areas outside the limits of grading that are disturbed in the course of the Work) that are not paved.

10.4 Deliverables

10.4.1 Released for Construction Documents

The Demolition and Abandonment plan shall be submitted to GDOT for acceptance no later than one hundred and eighty (180) Days from NTP 1 but must be completed prior to any Construction Phase as specified in Section 23.

11 ROADWAYS

11.1 General Requirements

The objectives of the Project include the provision of a safe, reliable, cost-effective, and aesthetically-pleasing corridor for the traveling public. The requirements contained in this Section 11 provide the framework for the design and construction of the roadway improvements to help attain the project objectives.

DB Team shall coordinate their roadway design, construction, maintenance, and operation with all other Work planned or under construction by GDOT and/or Governmental Entity.

Whenever DB Team receives a design request from an adjacent property owner, DB Team shall, within thirty (30) Days of the request, produce a report to GDOT identifying the nature of the request, the financial consequences to GDOT of compliance (if any), DB Team's assessment of the feasibility of compliance, any Change Requests from the Technical Provisions that would be required and any potential risks to GDOT that may arise from implementation of the design request such as environmental and permitting risks. Where DB Team determines that there are no financial consequences to GDOT, time impacts to the Project and Change Request from the Technical Provisions, and provided that GDOT raises no objection within thirty (30) Days of DB Team's report, DB Team may proceed with the implementation of the design request at its option and shall advise GDOT in writing of its decision.

No open cutting (removal of pavement to construct, repair, or relocate utilities/drainage structures or for any purposes that cause a full depth cut of existing pavement and removal of any subgrade beneath) of the Travel Lane pavements or ramp pavements shall be allowed without prior acceptance of GDOT. Any pavement that is open cut as described in this paragraph shall be repaired in kind prior to the Travel Lane or ramp being opened to traffic.

The stockpiling of materials may be permitted on a case by case basis provided that participation is based on the appropriate value of approved specification materials delivered by the DB Team to the project site, or other designated location in the vicinity of the project and the terms and conditions below. Stockpiled materials that may qualify for material allowances include materials that are not readily available, can be easily identified and secured for this project, and, can be stockpiled for long periods without detriment. The procedure identified in GDOT Supplement Specifications 109.07.B shall be used to process a Material Allowance Request. Other provisions include:

- Stockpiles will be constructed in conformity with the provisions in the current GDOT Standard Specifications. Appropriate erosion control measures will be placed and maintained, and the site will be restored to its original condition. the DB Team will provide satisfactory evidence of insurance against loss by damage or disappearance,

- The stockpiled material is stored in such a manner that security and inventory can be maintained, and the contractor is responsible for any costs of storage of said materials.
- The material is supported by a paid invoice or receipt for delivery, with the DB Team to furnish the paid invoice within a reasonable time after receiving payment.
- The material conforms with the requirements of the plans and specifications,
- Any damage to material due to the delay in incorporation of the material into the Final Plans , shall be at the risk of the DB Team, and
- The quantity of material does not exceed the quantity required by the project, nor does the value exceed the appropriate portion of the contract item in which the material is to be incorporated.

11.2 Design Requirements

The design of the Project shall be in accordance with the NEPA/GEPA Approvals and Volume 3 Manuals (Technical Documents) and the DB Documents.

DB Team shall coordinate its roadway design with the design of all other components of the Project. The Project roadways shall be designed to integrate with streets and roadways that are adjacent or connecting to the Project.

The Project roadways shall be designed to incorporate roadway appurtenances, including, but not limited to fences, noise attenuators, barriers, and hazard protection as necessary to promote safety and to mitigate visual and noise impacts on neighboring properties. Fence type shall be replaced in accordance with GDOT Construction Standards and Details. Should the existing type of fence not match the type provided in the GDOT Construction Standards and Details, the type of proposed fence shall be accepted by GDOT.

The DB Team shall design and construct any and all proposed intersection reconstruction or rehabilitation to meet the requirements of the NEPA/GEPA Approvals and Volume 3 Manuals (Technical Documents).

Vibration Control

The DB Team is responsible for any and all vibration related damages to existing structures or other facilities located in the vicinity of construction related activities. Where vibration-inducing construction activities are to be performed in the vicinity of existing properties, structures, utilities, or other facilities, the DB Team shall evaluate potential impacts and develop a Vibration Control Plan for GDOT review and acceptance. The plan shall include certain triggers of action to ensure no damage to existing structures occurs as well as a means to resolve public concerns for the vibration at any level. Additional requirements for the Vibration Control Plan are as follows:

1. Use attenuation relationships published by applicable governmental agencies and/or applicable equipment manufacturers to estimate the zones within which vibrations caused by the Project may impact existing properties and facilities.
2. Within the zone of potential vibration impacts, conduct site reconnaissance of properties during site investigations to determine the sensitivity of each structure/facility to vibrations.
3. List all properties that may be adversely affected by vibrations.
4. Conduct a preconstruction survey of each structure determined to be susceptible to vibrations.
5. Provide the GDOT with recommendations to mitigate that may be adversely affected by vibrations.
6. Use the vibration monitoring records to develop attenuation curves for predicting vibrations at varying distances from the source.

The DB Team shall adjust operations immediately if the threshold readings above are exceeded.

Blasting

Follow GDOT Standard Specification 107.12

Control of Access

DB Team shall maintain all existing property accesses, including those not shown on the schematic, and shall not revise control of access without GDOT review and the written agreement of the affected property owner. Access control shall be in conformance with the GDOT *Regulations for Driveway and Encroachment Control*.

11.2.1 Typical Section(s) and Pavement Design

Refer to volume 2.

11.2.2 Additional Roadway Design Requirements

DB Team shall coordinate, design and construct the improvements on crossing streets in accordance with the Governmental Entity having jurisdiction of said roadway. All roadside safety devices used on the Project shall meet current crash test and other safety requirements that meet or exceed current GDOT requirements. GDOT does not allow longitudinal pavement joints in the wheel path of the traveling public unless otherwise accepted by GDOT.

When designing and constructing hardscape elements at intersections, at a minimum, DB Team shall use colored textured concrete in all raised medians. Monolithic concrete medians will not be accepted. Stamped concrete may only be used only where local communities agree to maintain them, and it meets the requirements in GDOT specifications, policies, procedures and Volume 3 Manuals (Technical Documents).

Concrete paving shall be used in hard to reach mowing areas or under structures (such as, but not limited to, areas near or next to or between guard fence posts, sign posts, bent columns, next to retaining walls, freeway ramp gores, paved ditches, flumes, ditch inlets, etc.) to improve roadway appearance.

When guardrail is required on interstates, freeways, and other 4-lane roadways, shoulder paving shall be extended beyond the usable paved shoulder to conform to GDOT Standards and Details.

When construction impacts existing cable barrier that will remain in place, new end terminals shall be installed as required to ensure cable barrier remains in operation at all times. If existing cable barrier cannot remain in operation during construction, temporary concrete barrier shall be installed in the same general location as the existing cable barrier for the full length impacted, including approaches.

11.2.3 Allowable Design Exception(s)/Variance(s)

Refer to volume 2.

11.2.4 Visual Quality

When lighting is required, DB Team shall provide luminaries of equal height along the roadway.

11.2.5 Permanent Lighting

The DB Team shall design the lighting of the Project in accordance with Volume 3 Manuals (Technical Provisions), the DB Documents, and at a minimum shall match the existing lighting illumination of the adjacent General Purpose lanes. The DB Team shall also make all necessary enhancements or changes to the existing General Purpose Lanes lighting system to maintain the existing illumination if diminished by the Project.

DB Team shall install mechanical copper wire theft deterrent devices in all Project electrical conduits supplying power to the Project. The theft deterrent devices typically consist of a rubber stopper mechanical device that compress against the electrical wiring and prevents the wires from being easily pulled through the conduits. DB Team shall also install electrical pull box lids that contain locking mechanisms that works with the use of cams to prevent unauthorized access.

DB Team shall prepare lighting studies that consider illumination levels, uniformity, and sources for the roadways, interchanges, and special areas including local roadway intersections. DB Team shall maintain an average horizontal luminance on the roadways that provided consistent illumination.

All third-party requests for lighting within the Project Site shall be subject to GDOT acceptance.

DB Team shall provide an average to minimum uniformity ratio per AASHTO's *Standard Specifications for Structural Supports for Highway Signs*, *Luminaire, and Traffic Signals*, the Illuminating Engineering Society of North America (IESNA) RP-8-00 *Recommended Practice for Roadway Lighting*. *Traveled Roadways* and the Roadway Lighting Design Guide for tolled lanes, general use lanes, High Occupancy Vehicle (HOV) lanes, auxiliary lanes, ramps, frontage roads, and ramp terminal intersections with cross streets.

DB Team shall design the lighting system to minimize or eliminate illumination of areas outside the Existing ROW. Luminaires shall be, at a minimum, high pressure sodium and be in accordance with GDOT's Qualified Products List (QPL). Neither mercury vapor nor metal halide is allowed. Other energy efficient lighting technology will be considered by GDOT with acceptance, such as light emitting diodes (LED) or Induction luminaries.

DB Team shall design and construct the lighting system in a manner that will reduce and/or discourage vandalism.

Luminaire poles and breakaway bases shall be designed in accordance with AASHTO's *Standard Specifications for Structural Supports for Highway Signs, Luminaire, and Traffic Signals*. The DB Team shall install breakaway wiring connectors when using luminaire poles and breakaway bases. For all poles located within the clear zone of the roadways, DB Team's design shall incorporate breakaway devices that are pre-qualified by GDOT. Appropriate safety measures shall be used if DB Team does not use luminaire poles and breakaway bases. Luminaire poles and breakaway bases shall not be used when mounted on side barriers, median barriers or bridge structures.

DB Team shall place all understructure lighting in a configuration that minimizes the need for lane closures during maintenance.

DB Team shall determine and design appropriate foundation types and lengths for permanent lighting structures. GDOT requires consistent footing designs and has a minimum footing size criteria as follows:

Height of Pole in feet	**Diameter by depth of footing in**
Less than or equal to 40'	2' by 6'
40' to 50'	3' by 7'
50' to 60'	3' by 9'
High Mast min - 100' or greater	4' by 20'
NOTE: Poles for barrier mounted have a minimum of 2' by 4' base	

DB Team shall not place ITS cable, fiber-optic lines, signal conductors, or any other non-lighting related cables or conductors in the lighting conduit, ground boxes, or junction boxes.

Top latch mechanisms shall be used on all high mast lighting towers.

DB Team shall minimize the potential hazards of lighting poles through the careful consideration of mounting options and pole placements, including the following options:

- Placing mast arms on traffic signal poles
- Placing pole bases on existing or proposed concrete traffic barrier
- Placing poles behind existing or proposed concrete traffic barrier, guardrail or cable barrier
- Placing high mast lighting outside the clear zone, especially in roadway horizontal curves

DB Team shall ensure that lighting structures comply with Federal Aviation Administration (FAA) height restrictions within two miles airport facilities. In the event that proposed or existing luminaries, mast arms, or poles infringe into an airport's or heliport's base surface, DB Team shall coordinate with the FAA and GDOT to permit or relocate such structures. If FAA restrictions prohibit lighting structures from being placed in certain areas near an airport Project, DB Team shall find alternative ways of providing the required level of lighting.

DB Team shall coordinate with the Utility Owner(s) and ensure power service is initiated and maintained for permanent lighting systems. Where the Work impacts existing lighting, DB Team shall maintain the existing lighting as temporary lighting during construction and restore or replace prior to Substantial Completion.

DB Team shall place all bore pits safely away from traffic, provide positive barrier protection, and provide necessary signs to warn of the construction area.

DB Team shall contact Utility Owners regarding their specific required working clearance requirements.

DB Team shall ensure that roadway lighting is provided for the safety of vehicles and pedestrians as they approach local intersections.

DB Team shall affix an identification decal on each luminaire, ground box, and electrical service for inventory purposes and shall submit inventory information to GDOT in a GDOT-compatible format. This identification shall denote that these are property of GDOT and shall provide a contact phone number and address in the event of Emergency.

11.2.6 Related Transportation Facilities

DB Team shall design and construct all new roadway and bridges to accommodate the planned expansions or updates of Related Transportation Facilities as designated in the current transportation master plans found in Volume 2.

11.3 Deliverables

The DB Team shall provide the Submittals as required in Section 23 and in the DB Documents.

12 DRAINAGE

12.1 General Requirements

Effective performance of the Drainage System is an integral part of the success of the Project. All stormwater runoff that flows through the Project, whether originating within or outside the Project, must be accounted for in the design of the Drainage System. All existing and proposed riverine/tidal bridges, storm-water conveyances (open-channel and closed-conduit), inlets and stormwater management such as detention/retention ponds are included as part of the Drainage System.

The design of the Project shall be in accordance with Volume 3 Manuals (Technical Documents) and the requirements of the DB Documents and Government Approvals.

The Drainage System shall meet the following requirements:

- The analysis, design, and construction of all components of the Drainage System shall address the interim conditions during construction of the Project and the Final Plans; and.
- The System shall have adequate capacity to convey all storm water through the Project without any adverse impacts to upstream and/or downstream adjacent properties.

12.2 Administrative Requirements

12.2.1 Data Collection

The DB Team shall collect all necessary data, including those components outlined in this Section 12.2.1, to establish a Drainage System that complies with the requirements and accommodates the historical hydrologic flows within the Project limits.

The DB Team shall collect all available data identifying storm-water resource runoff obligations, including:

- water Water quality regulations as imposed by local, State and federal governments;
- National Wetland Inventory and any other wetland/protected waters inventories;
- anyAny local floodplain ordinances in effective Federal Emergency Management Agency (FEMA) floodplains;
- anyAny restrictions on discharging storm water to environmentally sensitive areas, navigable waters or coastal zones; and
- officialOfficial documents concerning the Project, such as the NEPA/GEPA document and any other drainage or environmental studies.

The DB Team shall determine any storm water ~~resource~~ runoff issues that may include areas with historically inadequate drainage (evidence of flooding or citizen complaints of flooding), maintenance problems associated with drainage, and areas known to contain Hazardous Materials. The DB Team shall identify watershed boundaries, protected waters, areas classified as wetlands, floodplains, and boundaries between regulatory agencies (e.g., watershed districts and watershed management organizations).

The DB Team shall acquire all applicable municipal drainage plans, ~~Municipal Separate Storm Sewer System (MS4) permits,~~ watershed management plans, coastal zone management plans and records of citizen concerns. The DB Team shall acquire all pertinent existing storm drain plans, bridge hydraulic studies and/or survey data, including data for all culverts, drainage systems, storm sewer systems, and bridge sites within the Project limits. The DB Team shall also identify existing drainage areas and calculate the estimated runoff to the highway drainage system. .

The DB Team shall obtain photogrammetric and/or geographic information system (GIS) data for the Project limits that depicts any impaired waters as listed by ~~the Georgia Soil and Water Conservation Commission (GSWCC) and~~ EPD. The DB Team shall conduct surveys for information not available from other sources.

If documentation is not available for certain ~~Components~~ components of the existing drainage system within the Project limits and these Components are scheduled to remain in place, The DB Team shall investigate and video record or photograph these ~~Components~~ components to determine condition, size, material, location, and other pertinent information.

The data collected shall be taken into account in the Final Plans of the drainage facilities.

12.2.2 Coordination with Other Agencies

The DB Team shall coordinate all ~~water resource~~stormwater runoff issues with affected ~~interests~~ interested parties and regulatory agencies, including but not limited to EPD, USACE, and USFWS. The DB Team shall document any resolutions of ~~water resource~~stormwater runoff issues.

12.3 Design Requirements

Within the Construction Maintenance Limits, the DB Team shall upgrade all substandard drainage facilities where the design and construction of the Project propose to utilize or impact those facilities. A substandard drainage facility is any Stormwater drainage system component where the existing structural condition per Section 13 (Structures) and/or hydraulic capacity per this Section 12 (Drainage) is not adequate to carry the additional stormwater generated by the Project. The design of the Drainage System shall include reconfiguration of the existing drainage systems within

the Project limits and design of new storm drainage systems as required per the performance requirements, defined in this Section 12.

Damage to existing infrastructure due to the DB Team's operation shall be immediately repaired to maintain existing system capacity at all times. This permanent repair shall be at the DB Team's expense.

The DB Team shall provide facilities compatible with the existing drainage system and all applicable municipal drainage plans or systems in adjacent properties. The DB Team shall preserve existing drainage patterns wherever possible.

The DB Team may utilize the existing drainage facilities, provided overall drainage requirements for the Project are achieved. Modification of the existing system or installations of new drainage systems to create in-line/buried/subsurface/underground detention of storm-water runoff storage shall not be allowed. The use of blind junctions and/or non-accessible structures shall not be allowed unless otherwise approved in writing by GDOT. The DB Team shall not install and/or utilize longitudinal storm sewer pipe under travel lanes unless otherwise approved in writing by GDOT. If no modification or upgrading of the existing GDOT stormwater system is required, the DB Team shall at a minimum maintain the existing system. This maintenance includes but is not limited to silt removal from any pipe, ditch or structure and removal of any debris prior to the use of any existing GDOT stormwater system. This maintenance shall be at the DB Team's expense.

The DB Team shall base its Final Plans on design computations and risk assessments for all aspects of Project drainage.

The DB Team shall design channels and ditches such that erosion within and downstream of the channels and ditches is minimized. Roadside and median channel design should be based on the 10 year design storm event for interstate systems and full access controlled roadways. The design high water elevation should be at least 6" below the roadway's normal shoulder break point. The travel lane should not be encroached upon during the 50 year design storm event. On depressed roadways/sections, at low points and sag locations/areas/points, all median drains should be designed for the 50 year design storm event such that the water will not reach the bottom of the pavement structure. All roadway, berm, surface, and outfall ditches should be designed such that the 25 year design storm event will not reach the bottom of the pavement structure. A 50 year design storm event should be used for ditches and channels at low points where flow must escape through an inlet. This requirement does not apply to roadways where water can escape over a curb, roadway, etc. into another channel. If these requirements are not achievable with a channel, the DB Team may design an open concrete-lined conveyance limiting ponding per Section 12.3.2.3, Gutter Spread/Ponding.

The DB Team shall coordinate with FEMA and/or the appropriate local community regarding any impacts to regulatory floodways and floodplains. In the event a

Conditional Letter of Map Revision (CLOMR) is required, local community approval and the subsequent submission to FEMA shall occur as early in the Project timeline as possible. The DB Team shall allow up to one (1) year in the schedule for FEMA approval of any required CLOMR review.

The DB Team shall design the Project to ~~minimize impacts~~follow ~~to~~ FEMA regulations in FEMA regulated floodplains. This design may include but is not limited to bridge structures over streams, bridge(s) or bottomless culverts over streams, increasing the tie slope and/or utilizing retaining walls to reduce fill in the floodplain.

All areas of the Project shall comply with the Post-Construction Stormwater Design Guidelines contained in GDOT's Manual on Drainage Design for Highways (Drainage Manual).

Flood damage potential for the completed Project shall not exceed pre-Project conditions.

12.3.1 Surface Hydrology

12.3.1.1 Design Frequencies

The DB Team shall use the Design Discharge Criteria in the Drainage Manual and comply with Code of Federal Regulations (CFR) Part 650-Bridges, Structures, and Hydraulics.

If a design storm frequency is not specified for a given component of the temporary Drainage System, the DB Team shall use the design storm frequency for the corresponding Final Plans Facility.

12.3.1.2 Hydrologic Analysis

The DB Team shall design the drainage system to accommodate the Project drainage areas. These areas may extend outside of the Project Limits.

The DB Team shall perform hydrologic analyses for the design of drainage features during the staging of construction and for the Final Plans for the Project according to the Drainage Manual.

12.3.2 Storm Sewer Systems

Where precluded from handling runoff with open channels or ditches, the DB Team shall design enclosed storm sewer systems to collect and convey runoff to appropriate discharge points.

The DB Team shall prepare a storm sewer drainage report encompassing all storm sewer systems that contains, at a minimum, the following items:

- Drainage area maps with each storm drain inlet and its pertinent data, such as delineated drainage area, topographic contours, runoff coefficients/design curve numbers, times of concentration, land uses, discharges, velocities and headwater elevations.;
- Detailed tabulation of all existing and proposed storm drains. This includes but may not be limited to conveyance size and class or gauge; catch basin spacing/location and detailed structure designs.;
- Specifications for the pipe bedding material and structural pipe backfill on all proposed pipes and pipe material alternates.; and
- Storm drain profiles, including pipe size, length, type, height of fill, class/gauge, gradient and design hydraulic grade line (HGL); and numbered drainage structures with station offsets from the roadway alignment and elevations.

12.3.2.1 Pipes

Storm drains shall be designed with design flow velocities less greater than or equal to three (3) feet per second (fps) or slopes greater than or equal to 0.0100 ft/ft to preventshall be designed for 80% full flow to account for sedimentation in the pipe. Other storm drains shall be designed using full flow. Storm drains shall be designed to prevent surcharging of the system at the flow rate for the design year event.

All storm drains shall be reinforced concrete unless accepted otherwise by GDOT prior to installation. The DB Team shall adhere to the approved Geotechnical Engineering Report and ensureor for storm drains at grades that are greater than or equal to ten (10)%. For other pipe materials, the DB Team shall show with a soil survey that appropriate materials are used pursuant to Section 8.

Minimum pipe inside diameter shall be eighteen (18) inches. GDOT acceptance shall be required for all existing pipes to be replaced with a diameter less than eighteen (18) inches.

Existing pipe systems not meeting GDOT's maximum structure spacing requirement that are not being impacted by the construction of the Project may remain. If an existing system is being impacted it shall be upgraded to meet the requirements of this Section 12.

Some existing culverts and storm drains were designed with a "step down" structural capacity. This step down design for reduced structural capacity occurs in the dead load zone of the fill slopes. Where there is "step down", the section of culvert/storm drain within the dead load influence has less structural capacity than the section of culvert/storm drain within the live and dead load influences. For the Project, the DB Team shall design all stormwater conveyances to accommodate all live and dead loads from the existing and proposed roadway system.

12.3.2.2 Municipal Separate Storm Sewer System

The DB Team shall follow requirements in Section 10.2.2 MS4 Related Post-Construction Stormwater Requirements in the Drainage Manual for compliance with ~~the Department's~~GDOT's General NPDES Stormwater Permit No. GAR 041000 (MS4 Permit). The DB Team shall also be directly responsible for the following:

- Public Involvement/Participation;
- Illicit Discharge Detection and Elimination as found in the Stormwater System Inspection and Maintenance Manual on the SharePoint site;
- Construction Site Storm Water Runoff Control; and
- Pollution Prevention/Good Housekeeping for Municipal Operations as found in the Facilities Stormwater Pollution Prevention Plan on the SharePoint site.

Thirty (30) Days prior to the end of each reporting period as ~~defined~~ required in the MS4 Permit, the DB Team shall provide to GDOT annual report data covering the portion of GDOT's MS4 within the Project limits.

The DB Team shall:

- Attend a GDOT/EPD approved training program to educate contractors and employees conducting activities that may impact stormwater runoff~~.~~;
- For existing conditions, provide GIS data of the existing storm sewer system and all ditches ~~(right of way to right of way)~~within ROW prior to the start of any Construction Phase. This GIS data shall comply with GDOT's ~~Utility office's Phase I GIS mapping criteria per the Statewide Stormwater Assessment Program (SSAP).~~Supplemental Specification 156;
- Mark all proposed storm drain access covers within the Project limits with a GDOT approved medallion educating the public to the destination of the storm drain contents~~.~~;
- Provide as-built GIS data of the entire storm drain system ~~(right of way to right of way).~~within ROW;
- Clean the existing drainage system sufficiently enough to allow for the proper detailed inspection of the system within the Project limits and as required in Section 19 for any proposed stormwater systems~~.~~;
- Inspect outfalls for illicit discharges according to GDOT's Illicit Discharge Detection and Elimination Plan while mapping the storm sewer system ~~right of way to right of way~~within ROW. This inspection shall identify any dry weather flows and determine if these flows are from an illicit discharge. Documentation of the outfall inspections conducted each year shall be submitted to GDOT for inclusion in the annual report~~.~~;
- Trace and eliminate any identified illicit discharges according to GDOT's Illicit Discharge Detection and Elimination Plan that are found to originate within the Project limits. Report to GDOT all other identified illicit discharges~~.~~; and
- Report to GDOT all other identified illicit discharges.

12.3.2.3 Gutter Spread/Ponding

The DB Team shall design pavement drainage systems, in both staging of construction and the propsed project, to limit ponding to the widths listed below for the design frequency:

- For ~~All~~ all interstate highways and all roads other than interstates with design speeds of greater than 45 ~~Miles Per Hour (~~mph~~)~~; ponding shall be confined within the shoulder~~ and have a spread no greater than ten (10) ft~~. In no event shall any ponding occur in an interstate travel lane;
- ~~All~~ For all roads other than interstates with design speeds of 45 mph or less, ponding shall be confined to within half (½) the lane adjacent to the gutter/shoulder and the gutter/shoulder; and
- ~~All~~ For all bridge decks, ponding shall be limited according to ~~section~~ Section 13.2.2 Design Spread and Frequency in the Drainage Manual.

Note: ~~With a bicycle lane, the maximum gutter spread shall be ten (10) ft. from face of curb/barrier wall~~Bicycle lanes are considered part of the shoulder.

Concentrated stormwater shall not be allowed/released to flow across any travel lane within the Project. The term "shallow-concentrated" shall be synonymous with "concentrated" with respect to flows across travel lanes. Only sheet flow shall be allowed to flow across travel lanes.

12.3.3 Hydraulic Structures (Culverts/Bridges)

The DB Team shall analyze existing and proposed culverts and bridges impacted, replaced, or created by the Project design, for any flooding problems.

For all culverts, the DB Team shall determine the allowable headwater depth (HW_d) for the design-year storm per the GDOT Drainage Manual and based on items such as potential damage or loss of use to adjacent property, the culvert, roadway, stream and/or floodplain, as well as~~;~~ traffic interruption ~~and~~ or hazard to human life.

All hydraulic computations, designs, and recommendations shall be consistent with past studies and projects in the area performed by local, State, or federal agencies.

Where hydraulic design is influenced by upstream storage and/or tidal surges, the analysis of the storage and/or the tidal surges shall be considered in the design of the structure.

Bridge culverts shall have a minimum rise dimension of four (4) feet.

12.3.3.1 Method Used to Estimate Flows

The DB Team shall ensure that the selected hydrologic method is appropriate for the watershed conditions.

As appropriate, the DB Team shall utilize flow information within FEMA Flood Insurance Studies (FIS) and any subsequent Letters of Map Revision (LOMR).

For crossings not located within a FEMA FIS or on a gauged waterway, the DB Team shall utilize the required method for calculating the design flows according to the GDOT Drainage Manual.

12.3.3.2 Design Frequency

Culverts and storm drain systems shall be designed for the design-year frequency corresponding to the functional classification of the associated roadway, (see Table 12-1). Bridges shall be designed for the fifty (50) and one hundred (100)-year frequencies.

12.3.3.3 Hydraulic Analysis

The DB Team shall evaluate bridge(s) for contraction and pier scour concerns and shall design for scour protection in accordance with the Drainage Manual.

For bridge abutments in urban areas, the DB Team shall install protection in accordance with Section 15 Landscape and Hardscape Enhancements.

12.3.3.4 Riverine Bridge/ Bridge Culvert Design

For existing bridges~~ and bridge culverts~~, the DB Team shall analyze ~~the existing~~each structure with the proposed flows to ensure ~~the headwater does not exceed that of the current conditions or~~it provides the required freeboard ~~in the case of a bridge~~ per the GDOT Drainage Manual. If ~~either condition~~this requirement is not met, the DB Team shall design and construct a replacement structure with sufficient capacity to pass the Design Storm Event flows while providing the required freeboard~~and ensure the headwater for any storm event does not exceed that of the corresponding event for the current condition and existing freeboards are maintained. Bridge culvert extensions may increase the headwater elevation, but not above the HW.~~

For existing bridge culverts, the DB Team shall analyze each structure with the proposed flows to ensure the headwater does not exceed that of the allowable headwater per the GDOT Drainage Manual. If this requirement is not met, the DB Team shall design and construct a replacement structure with sufficient capacity to pass the proposed Design Storm Event with a resulting headwater depth of no greater than the HW_d.

Bridge/bridge culvert design shall maintain the existing channel morphology through the structure, if possible.

12.3.3.5 Bridge Deck Drainage

Runoff from bridge decks shall be carried off the bridge and into the adjoining roadway drainage system. The roadway drainage design shall include bridge approach drains to

intercept gutter/shoulder flow at each end of the bridge. Stormwater flowing toward the bridge shall be intercepted upstream of the bridge.

Open deck drains are not permissible for bridges passing over environmentally sensitive areas, roadways, or railroads. In these situations, if ponding will exceed width limits, runoff shall be collected in inlets and conveyed in a closed deck drain system before discharging outside of these areas.

12.3.3.6 Drainage Report for Hydraulic Structures

The DB Team shall prepare a~~n~~ Hydraulic and Hydrologic (H&H) Study and any other required documentation for all existing and/or proposed river and tidal bridge sites and for culverts that meet any of the conditions listed in Section 12.1 of the Drainage Manual and any Environmental Commitments identified in the NEPA/GEPA Approval. Additional documentation may include but not be limited to the preparation and submittal of any CLOMR or LOMR required for community and/or FEMA coordination. The ~~report~~ H&H Study shall further include the detailed calculations with electronic and printed copies of the computer software input and output files, as well as a discussion about hydrologic and hydraulic analysis and reasons for the design recommendations. At a minimum, for each crossing the ~~report~~ H&H Study shall include:

Hydrology

- Drainage area maps with watershed characteristics~~,~~ (hardcopy);
- Hydrologic calculations (where computer software is used, both hardcopy report and electronic input and output files on a disc); and
- Historical or site data used to review computed flows.

Hydraulics and Recommended Waterway Opening and/or Structure

- Photographs of Site (pre- and post-construction)
- General plan, profile, and elevation of recommended waterway opening and/or structure
- Calculations – include a hardcopy report of output, ~~as well as~~ in addition to electronic input and output files for all computer models used for final analysis or for permit request(s), as well as a summary of the basis of the models;
- Cross-sections of waterway (~~the DB Team shall provide~~ a hard copy plot, plus any electronic data used); and
- Channel profiles.

Scour Analysis

- Channel cross-sections at bridge(s) showing predicted scour depths;

- Calculations and summary of the calculations table, clearly showing predicted scour and assumptions regarding bridge opening and piers (dimensions, shape, etc.) used to calculate predicted scour;
- Discussion of the potential for long-term degradation/aggradations and effects; and
- Recommendation(s) for abutment protection (type, size, dimensions, etc.).

~~This report shall be~~These H&H Studies shall constitute a section in the Drainage Design Report.

12.4 Construction Requirements

The DB Team shall design the Drainage System to accommodate construction staging. The design shall include temporary erosion control, sediment basins and other BMPs needed to satisfy the NPDES and other regulatory requirements. All environmental approval commitments related to drainage design and erosion control shall be included as "notes" on the plans for each stage of construction.

~~Should the~~The DB Team shall obtain GDOT acceptance during the Design-Build Period to utilize any existing stormwater system (any and all pipe, structure, ditch, detention/retention system or any other component necessary for the conveyance of stormwater) outside the Project limits~~,~~. ~~m~~Maintenance responsibility and costs shall be as follows during the Design-Build Period:

- Initial costs to reconstruct or upgrade the substandard drainage facility(ies) outside of the Project limits, ~~upgraded or reconstructed by the DB Team~~ shall be at the sole cost of the DB Team. Rehabilitation of substandard drainage facilities may be considered. The rehabilitation must meet the useful life as if the substandard drainage system structure was replaced as new~~.~~;
- Any stormwater system accepted by GDOT ~~during the Design-Build Period~~ and constructed for the sole purpose of the Project outside the Project limits shall be maintained by the DB Team at the DB Team's sole expense ~~during the Design-Build Period.~~;
- The DB Team, at the DB Team's expense, shall be responsible for maintenance ~~work and restore~~and restoration of the existing system to its original intended purpose for any accepted existing stormwater system whether used jointly by the DB Team and GDOT or for the DB Teams sole use; ~~-~~ and
- Maintenance work includes but is not limited to silt removal of any pipe, ditch, or structure, and removal of debris prior to the use of any existing GDOT stormwater system at the DB Team's expense.

12.5 Deliverables

The DB Team shall submit to GDOT for review and acceptance, a Drainage Design Report per the accepted Construction Phasing Plan, which shall be a complete

documentation of all components of the Project's drainage system. At a minimum, the ~~Report~~report shall include:

- A set of all drainage computations, both hydrologic and hydraulic, with all support data;
- Hydraulic notes, models, and tabulations;
- Bridge and culvert designs and Hydraulic reports. (~~Each~~ each riverine bridge layout/design shall be submitted at the same time as their corresponding H&H Study);
- Pond designs, including a graphic display of treatment areas and maintenance guidelines for operation;
- A ~~Correspondence~~ correspondence file;
- Drainage system data (location, type, material, size, and other pertinent information) in a suitable electronic format such as GIS;
- A ~~P~~post-Construction Stormwater Report with a Post-Construction BMP Infeasibility Report as applicable; and
- Storm sewer drainage reports (if applicable) including Temporary and Final Drainage System layout with staged erosion control BMP location details.

13 STRUCTURES

13.1 General Requirements

The structural Elements of the Project, including bridges, culverts, drainage structures, signage supports, illumination assemblies, traffic signals, retaining walls, and sound barrier, shall be designed and constructed in conformance with the requirements of the DB Documents, in order to provide the general public a safe, reliable, and aesthetically-pleasing facility.

DB Team shall prepare a detailed plan for such Elements constructed on the Project with recommended design and construction. The design of the Project shall be in accordance with Volume 3 Manuals (Technical Documents) and the requirements of the DB Documents.

13.2 Design Requirements

13.2.1 Design Parameters

DB Team shall ensure that bridges crossing over waterways are designed in accordance with Section 12 and the DB Documents.

The DB Team shall design and construct all new bridge structures to accommodate any planned expansions or updates of each facility by its respective Governmental Entity or GDOT as designated in their respective current transportation master plans. The current transportation master plans can be found in Section 11 of Volume 2. For the purpose of the Technical Provisions, superstructure is the portion of the bridge above and including the bearings and the substructure is the remaining portion of the bridge below the superstructure.

Longitudinal expansion joints shall not be placed in the travel lane.

Unless otherwise noted, design for all new roadway structural elements, incorporated within the Project (not including future replacement structures), shall be based on the Load Resistance Factor Design (LRFD) methodology.

Vertical Clearances

New bridges constructed over the interstate shall provide a minimum vertical clearance of seventeen (17) feet (new box girder bridges shall be seventeen (17) feet six (6) inches). Straddle bent substructure elements over the interstate shall provide a minimum vertical clearance of seventeen (17) feet six (6) inches. New bridges constructed over other roads such as State, Rural Secondary and Urban Routes, as defined by the GDOT Design Policy Manual shall provide a minimum vertical clearance of sixteen (16) feet nine (9) inches.

Bridge Design Live Loads and Load Ratings

All new or widened bridges must be designed to carry an HL-93 vehicle live load. The DB Team is responsible to ensure that the Final Plans of each bridge meet the load rating requirements for the design vehicle as well as all current state legal live loads. GDOT will perform a load rating as part of the final review for each bridge design. Load ratings will be performed according to the current GDOT policy and practices.

Seismic Design

Bridges shall be designed in accordance with the seismic design guidelines in the GDOT LRFD Bridge and Structures Manual as well as the AASHTO LRFD Bridge Design Specifications 5th Edition.

Fatigue Design

Fatigue design shall be in in accordance the GDOT LRFD Bridge and Structures Manual as well as the AASHTO LRFD Bridge Design Specifications 5th Edition.

13.2.2 Bridge Decks and Superstructures

Timber bridges, masonry bridges, unpainted weathering steel and structural plate arches will not be permitted. Bridges shall not use intermediate hinges.

DB Team shall minimize the number of deck joints wherever possible. DB Team shall locate joints to provide for maintenance accessibility and future replacement.

To the extent possible, DB Team shall make bridge superstructures, joints, and bearings accessible for long-term inspection and maintenance. DB Team shall make open-framed superstructures accessible with walkways or by use of ladders or an under-bridge inspection truck.

Provide concrete diaphragms for pre-stressed concrete beams spanning 40 feet or more.

Galvanized steel diaphragms are allowed on prestressed concrete beam bridges, with the following limitations:

- Only structures with substantial clearance (20 ft. or greater) over roadways or over waterways are acceptable locations for galvanized steel diaphragms.
- Concrete diaphragms shall be used over roadways where the beams may be impacted by over-height loads.
- Bolts shall not be exposed on the exterior face of concrete beams.
- Only Steel X-type cross frames shall be used.

The maximum weight of beam that may be transported on state routes is limited. Shipping weights larger than150,000 pounds, including the truck, shall be submitted to the Department to determine if a special hauling route is necessary for delivery.

Bolted field splices are allowed for use on steel girders providing the following requirements are met:

- Bolts shall be placed in double shear.
- Splice plates and bolts shall not encroach on the slab design thickness
- Direct Tension Indicators (DTIs) shall not be used.

DB Team shall install locked entryways on all hatches and points of access.

Cover plates are prohibited for use on new steel beams. When widening existing bridges "in kind" that have cover plated members, use a larger member size that will not require plates. For strengthening and rehabilitation work of existing steel beams determine if there are other methods available to provide the required capacity before submitting to the Department for acceptance. If accepted, cover plates shall be checked for fatigue in accordance with GDOT and AASHTO LRFD guidelines.

Fracture critical members (FCMs) shall not be used for bridges. Steel box girder straddle bent caps are considered to be FCMs due to their non-redundant properties and will not be permitted on the project. Post-tensioned concrete straddle bent caps are not considered FCMs as the posttensioning strands provide internal redundancy. Bridges designed using rolled steel beams, steel plate girders, pre-stressed concrete I-beams and pre-stressed concrete bulb-tee beams as the main members of the bridge superstructure shall be designed and constructed using a minimum of four (4) beams in the bridge typical section. Joints for all grade separation structures shall be sealed.

Box girder superstructures and substructures shall be accessible without impacting traffic below. DB Team shall make box girders and box beam pier caps with a minimum inside depth of six (6) feet to facilitate interior inspection. DB Team shall include a minimum access opening of 3'-0" diameter into all cells, and between cells, of the girders or pier caps to allow free flow of air during inspections. The outside access opening cover shall hinge to the inside of the box girder and pier caps. An electrical system (110V and 220V) shall be incorporated inside the box girder and pier caps with lighting and power outlets. DB Team shall install air-tight sealed and locked entryways on all hatches and points of access.

13.2.3 Bridge/ Retaining Wall Foundations

The foundation design shall be based on the recommendations of the accepted Bridge or Wall Foundation Investigation Report and the requirements of Section 8 of Volumes 2 and 3. The Contractor shall perform LRFD bridge and wall foundation investigations for all proposed walls and bridges to be constructed on this Project. Except as provided in Section 8 of Volume 2, any previously accepted reports provided by the Department are

for informational purposes only and the Department does not certify or warranty the information contained in these reports.

For bridges crossing streams or any other body of water: All foundations shall be evaluated and designed to account for the effects of scour. The design shall include the recommendations of the hydraulics and hydrological report to ensure that footings, piles and caissons/ drilled shafts have the proper embedment below the scour line. Protection of slopes with rip rap shall be in accordance with the recommendations of the hydraulics report.

Foundations shall be designed based on LRFD methodology in accordance with GDOT and AASHTO guidelines (Volume 3 Manuals).

13.2.4 Bridge Railing and Barriers

All barrier systems used on the Project shall meet current crash test and other safety requirements as determined by GDOT. All testing and associated costs for non-standard railings shall be the sole responsibility of DB Team and shall be accomplished through a third party acceptable to GDOT.

13.2.5 Retaining Walls

To the extent possible, DB Team shall design and construct to provide embankments without the use of retaining walls. Where earthen embankments are not feasible, DB Team may use retaining walls.

Metal walls, including bin walls and sheet pile walls, recycled material walls and timber walls shall not be permitted.

If pipe culverts are to extend through the retaining walls or sound barriers the pipe shall be installed so that no expansion joints are located within two pipe diameters from centerline of the pipe or under the wall.

No weep holes through the face of retaining walls shall be permitted, except at the base of the walls.

Modular walls employing interlocking blocks shall not be used where surcharge loads from vehicular traffic are present or as part of bridge abutments.

Mechanically Stabilized Earth (MSE) walls shall not be used to support spread footing abutment foundations on the Project.

13.2.6 Aesthetics

DB Team shall design retaining/structural walls to be similar in color, texture, and style that are consistent with other Elements present in the entire Project such as structures, landscaping, and other highway components.

All embellishments for structural Elements shall be coordinated with the DB Team's structural design team to facilitate constructability and maintain safety requirements. Structural element surfaces exposed to public view shall meet the requirements of the Standard Specifications, Construction of Transportation Systems.

No exposed conduits shall be allowed on bents, columns, bridge beams, overhangs or any other visible surface. The DB Team is to minimize drain pipe exposure to public view.

All bridge substructure columns shall be consistent in form and texture, with similar shapes and details used for all bridges.

Bridges with all or part of the structure visible to traffic either passing beneath the bridge or travelling in lanes adjacent to the bridge, shall use constant depth of fascia beams along the entire length of the bridge to maintain a uniform appearance. An exception to this requirement is at locations where the fascia beam material changes from steel to concrete or vice versa. In this case cheek walls may be used at piers to mask transitions where superstructure depth change is required due to the change in material type.

Bridges that are not visible to traffic either passing beneath the bridge or travelling in lanes located adjacent to the elevated portions of the bridge are not required to have all fascia beams constant throughout the bridge length

13.2.7 Drainage Structures

In developing the design of drainage structures, DB Team shall account for maximum anticipated loadings. "Step down" design shall not be utilized for any part of the proposed drainage system.

Energy dissipaters, if used, shall be considered as structural Elements.

13.2.8 Sign, Illumination, and Traffic Signal Supports

DB Team shall be responsible for the design of overhead sign supports to accommodate a full load of signs for the Project. DB Team shall use sign bridge (Type I), butterfly (Type III or VIII), or combination (Type IV) in accordance with GDOT's related standard specifications, policies, guidelines, and Volume 3 Manuals. Type II sign (cantilever type) structures are not permitted.

Support columns for Type I, III and IV overhead sign bridges shall not be mounted to any portion of the new or existing bridge superstructure. Where an overhead sign structure is required to be placed on a bridge it shall be mounted either on the bridge substructure directly, such as the concrete pier cap, or on a pier and foundation separate from the bridge entirely. For a sign structure that is mounted to the pier cap, the bridge pier must be designed for the additional loads and forces the sign structure will induce on the bridge substructure, including but not limited to: dead load, ice load,

wind load and vibration. Loads shall be developed in accordance with the current edition of the AASHTO Standard Specifications for Structural Supports for Highway Signs, Luminaires and Traffic Signals. For a sign structure mounted to a foundation that is independent from the bridge, the design of the sign foundation shall be in accordance with the current edition of the AASHTO Standard Specification for Structural Supports for Highway Signs, Luminaires and Traffic Signals."

13.2.9 Widening/Modification of Existing Structure

Structures to be widened are listed in Section 13.2.9 of Volume 2. DB Team is required to rehabilitate/strengthen/replace that portion of the existing structure as recommended by the most recent bridge condition and bridge deck condition surveys, and the portions of the existing structure that must be strengthened or upgraded as a direct result of the widening. Examples include strengthening of an existing fascia beam or improving the strength of a pier cap to meet the increased load capacity requirements due to the new load distribution on those elements. Any portion of the existing bridges damaged as a result of the widening operations will be replaced or repaired at the DB Team's cost, as determined by GDOT. The DB Team shall provide any studies, calculations, and plans that are required for GDOT review and acceptance prior to any bridge widening or modification.

13.2.10 Toll Gantry Structures

Requirements for toll gantries are provided in Section 21 and its subsections.

13.3 Construction Requirements

13.3.1 Concrete Finishes

Concrete finishes shall comply with the performance requirements as stated in Section 15 or as otherwise allowable in the DB Documents.

13.3.2 Structure Metals

Welding shall be in accordance with the requirements of the *American National Standards Institute* (ANSI)/*AASHTO/ American Welders Association (AWS) D1.5M/D1.5:2010 Bridge Welding Code*.

13.4 Final Bridge Inspection Prior to Service Commencement

GDOT shall inspect all bridges constructed prior to Service Commencement. GDOT will perform the initial bridge ratings as part of this Work. Bridges cannot be opened to traffic until bridges have been accepted by GDOT.

DB Team shall provide to GDOT an overall schedule of completion for each structure in accordance with the Construction Phasing Plan and coordinate an inspection schedule with GDOT that will meet the Service Commencement Date.

13.5 Deliverables

Preliminary Bridge Plan Layouts

Prepare Preliminary Bridge Plan Layouts in accordance with the GDOT Bridge Detailing Manual guidelines.

A. Additionally provide a typical section which indicates the following information:

1. The center to center spacing of girders
2. Overhang or distance from outside edge of slab to center of exterior girder: This distance (overhang) shall meet AASHTO requirements, but shall not exceed 4'-7½" or one half of the adjacent beam spacing, whichever is less. Overhangs shall be a minimum width of one-half top beam flange plus 6 inches.
3. Cross slope of the deck.
4. Deck thickness between girders and deck thickness at the centerline of girder measured from the top surface of deck to top of the flange.
5. Barrier location, height and width.
6. Gutter to gutter and out-to-out dimensions.
7. Location of the profile grade.

B. Any drawing and/or narrative description of the construction scheme necessary to indicate how the bridge is to be built, including traffic handling sketches and temporary barrier locations.

Preliminary Wall Plans

Prepare Preliminary Wall Plans in accordance with the GDOT Bridge Detailing Manual guidelines. The acceptable wall types are as follows:

1. MSE (Mechanically Stabilized Earth)
2. Alternate wall types, including cast-in place walls, are permissible. Soil-nail type walls and modular block type walls will not be permitted directly adjacent to areas subject to roadway surcharge loads.
1.

A. Any construction sequence requirements that will affect the construction of the walls and which will have to be accounted for in the preparation of retaining wall plans.

Bridge and Wall Construction Plans

After the preliminary bridge and wall layouts have been accepted by GDOT, the DB Team shall prepare final plans. The DB Team shall arrange a meeting with GDOT to specifically discuss how the plans will be prepared prior to beginning plan preparation on the Project.

The DB Team shall provide Submittals as required in Section 23, Volume 3 Manuals (Technical Documents), and in the DB Documents in addition to the following:

- Hardscape Enhancement Plan for bridges, retaining walls, sound barriers, sign structures, and other structure components as required in Section 15.

14 RESERVED

15 LANDSCAPE AND HARDSCAPE ENHANCEMENTS

15.1 General Requirements

This Section 15 defines requirements with which the DB Team shall design and construct aesthetic treatment enhancements at a minimum for the roadway and landscaping Elements of the Project. Aesthetic treatments shall be designed to harmonize with the indigenous landscape and architecture.

15.2 Administrative Requirements

This Section 15 presents minimum landscape design requirements for the Project. The Aesthetic and Landscape Plan shall include but shall not be limited to the following aesthestic features and shall be included in the design preliminary plan:

- Material, finish, color, and texture of bridge Elements
- Materials, finish, and color of barriers and railings
- Paved slope treatments
- Contour grading, slope rounding, channel treatments, and drainage
- Sculptural and artistic features of other structures
- Sidewalks, median or pedestrian specialty paving, including material, finish, and color
- Hardscape embellishments at interchanges and intersections
- Fencing embellishments (other than GDOT standard material)
- Specialty Signage/Logos/Emblems –
- Architectural embellishment to any permanent building construction within the Project, including ancillary support, and operational. Planted vegetation (excluding erosion control seeding, final turf seeding and sodding)

15.2.1 Design Requirements

DB Team shall present their concept aesthetic and landscape plan to those local communities as designated by GDOT in order to gather input and feedback to be incorporated into the final aesthetic and landscape plan. The aesthetic and landscape plan that is submitted to the local communities for review shall only consist of the input to the aesthetic and landscape plan of those embellishments as allowed by this Section 15 and not the change in construction materials as allowed per the requirements of the RFP. Before presenting the concept aesthetic and landscape plan to the public, the DB Team shall meet and review the aesthetic and landscape plan with GDOT. The DB Team shall complete the coordination with the local communities within 8 weeks from the date of first presentation of the concept aesthetic and landscape plan to the local communities. After DB Team coordination with the public, the DB Team shall prepare a final aesthetic and landscape plan and submit the plan to GDOT for acceptance. GDOT will designate an amount as the aesthetic reserve. The aesthetic reserve shall include:

- Preparation of concept aesthetic and landscape plan as required above
- Coordination with local communities required for the development of the preliminary and final aesthetic and landscape plan
- Preparation of final aesthetic and landscape plan
- Preparation of the Landscape Enhancement Plan with site triangles
- Implementation of all aesthetic measures including all materials and labor
- Implementation of all landscape and hardscape enhancement measures including all materials and labor

The DB Team shall design the aesthetic, landscape, and hardscape to utilize the aesthetic reserve. However the DB Team shall be responsible for any amount exceeding the aesthetic reserve.

15.2.2 Reserved

15.2.3 Personnel

DB Team shall provide a landscape architect, registered in the State of Georgia, with a minimum five (5) years' experience in designing Landscape Enhancement Elements for roadway projects of similar scope and size, to develop the Landscaping Plans.

15.3 Design Requirements

15.3.1 Landscape and Hardscape Enhancement Principles and Strategies

DB Team shall follow the guidelines and requirements of the GDOT Policy for Landscaping and Enhancement (Policy # 6755-9), as well as the aesthetics principles, requirements, and strategies accepted by GDOT and the local communities for the Project, including the following:

- The Project shall minimize impact on the existing natural environment to the extent possible.
- The Project shall be complimentary to the indigenous landscape to the fullest extent possible.
- Simple geometric shapes for structures shall be used to the extent possible for continuity along the entire length of the Project.
- All structures shall be carefully detailed so as to achieve the greatest level of quality and fit within the regional context.
- Color, texture, and form shall be used consistently for all structures.
- Where color is used for concrete features, DB Team shall use colored mix concrete or staining application with prior acceptance by GDOT. No painted concrete features will be allowed.
- Unmanaged woods, existing trees and rock outcroppings shall be preserved to the greatest extent possible.

- Embellishment Elements shall be fully integrated with the overall landscape design.
- Landscape Enhancement Plans shall conform to GDOT's specifications, policies and procedures.
- Visual quality of the landscape shall be consistent along the entire length of the Project.
- Embellishment Elements shall be easy to maintain and provide protection from vandalism and graffiti.
- Aesthetics shall not interfere with safety, constructability, and maintenance.

15.3.2 Reserved

15.3.3 Reserved

15.3.4 Trees, Shrubs, and Other Plant Materials

Tree, shrubs and other plant materials shall comply with applicable requirements in GDOT's Specifications 700 (Grassing), 702 (Vine, Shrub and Tree Planting); and GDOT's Policies and Procedure 6755-9 (Landscaping on GDOT ROW).

15.3.1 Reserved

15.3.2 Reserved

15.4 Construction Requirements

Prior to start of production of any embellishment Element, the DB Team shall provide GDOT samples, mock ups, or catalog cuts for GDOT review and acceptance.

DB Team shall provide GDOT sample panels a minimum of sixty (60) Days in advance of starting construction of textured concrete surfaces.

15.5 Deliverables

The DB Team shall provide Submittals as required in Section 23 and in the DB Documents.

16 SIGNING, PAVEMENT MARKING, SIGNALIZATION

16.1 General Requirements

This Section 16 includes requirements with which DB Team shall design and construct all signing, delineation, pavement markings, and signalization for the Project. The DB Team shall design the Project in conformance with GDOT policies, guidelines, and Volume 3 Manuals (Technical Documents).

16.2 Administrative Requirements

16.2.1 Meetings

DB Team shall arrange and coordinate all meetings with local agencies that will assume responsibility for maintaining and operating traffic control devices including but not limited to traffic signals. DB Team shall provide GDOT with notification of such meetings a minimum of ten (10) business days prior to the start of the meeting. GDOT, in its discretion, may attend such meetings.

DB Team shall arrange and coordinate all meetings with requesting agencies or individuals regarding special signs.

16.3 Design Requirements

16.3.1 Final Plans

DB Team shall submit the Preliminary and Final Plans for the signing, delineation, pavement marking, and signalization for GDOT review and acceptance. In the event that additional property is needed to place any required signs, the DB Team shall acquire the additional property as Additional Properties. Any Additional Property acquisitions not provided in the approved environmental document must be approved by GDOT, and if required FHWA through a NEPA reevaluation.

16.3.2 Permanent Signing and Delineation

DB Team shall design and install all signs as shown on the Final Plans. Signs for the Project shall include all new signs required for the Project as well as replacing existing signs with in the Project Limits. DB Team's design shall include the locations of proposed ground-mounted and overhead signs as well as existing signs that are to remain, graphic representation of all signs, proposed pavement markings, delineation placement, guide sign and special sign details, clearance diagrams and structural and foundation requirements. Signs shall be located in a manner that avoids conflicts with other signs, vegetation, CMS, lighting, and structures. DB Team shall ensure that signs are clearly visible, provide clear direction and information for users, and comply with all applicable MUTCD requirements. The DB Team shall ensure that placement,

construction and installation activities of signage shall avoid impacts to waters of the U.S.

DB Team shall ensure that all sign placements meet or exceed appropriate sight line requirements and standards. All sign structures and overhead signs shall be designed and located to ensure that they and any existing GDOT overhead signs have minimum sight distance of 1000 feet and shall meet any other MUTCD or *GDOT Signing and Marking Guidelines*, allowable sign spacing requirements.

DB Team shall review with GDOT all requests for new signs, including traffic generators, or modifications of existing sign legend. Such requests are subject to GDOT's acceptance.

Any existing signs and sign structures impacted by the project or in conflict with proposed signs shall be replaced with new signs and structures that comply with the MUTCD, GDOT's related standard specifications, policies, guidelines, and Volume 3 Manuals Technical Documents), or as otherwise approved by GDOT.

All overhead signs on a single structure shall be the same height with the exception of general information or regulatory signs such as Rest Area or an R554-X.

Arrow per lane guide signs shall be required for all multi-lane exits at major interchanges that have an optional exit lane that also carries the through route and for all splits that include an option lane.

Sign attachments to any existing roadway bridge shall not be permitted. Support columns for Type I, III, and IV overhead sign bridges shall not be mounted to any portion of the new or existing bridge superstructure. When an overhead sign structure is required to be placed on a bridge it shall be mounted either on the bridge substructure directly, such as the concrete pier cap, or on a pier and foundation separate from the bridge entirely. For a sign structure that is mounted to the pier cap, the bridge pier must be designed for the additional loads and forces the sign structure will induce on the bridge substructure, including but not limited to: dead load, ice load, wind load and vibration. Loads shall be developed in accordance with AASHTO Standard Specifications for Highway Bridges, 17th Edition and the current edition of the AASHTO Standard Specification for Structural Supports for Highway Signs, Luminaires and Traffic Signals. For a sign structure mounted to a foundation that is independent from the bridge, the design of the sign foundation shall be in accordance with the current edition of the AASHTO Standard Specification for Structural Supports for Highway Signs, Luminaires and Traffic Signals.

Supplemental signs on interstates shall comply with MUTCD. Guidance on destinations is provided in GDOT's Policies and Procedures 6775-9.

16.3.3 Project Signs – Outside the Existing and Required ROW

For signs located outside the Existing ROW, Required ROW and Additional Properties but within a public ROW, DB Team shall install the signs in existing rights-of-way controlled by local or other Governmental Entities. DB Team shall coordinate with applicable Governmental Entities for the design and installation of such signs. This shall include any trailblazing signing required for the project.

16.3.4 Reserved

16.3.5 Specific Service Signs

In addition to the warning, regulatory, and guide signs within the Premises, GDOT or Governmental Entities may allow specific service signs, such as logo signs to be installed. DB Team shall coordinate and cooperate with GDOT or any third party performing such work. The DB Team shall remove and remount any LOGO sign that conflicts with a proposed sign installation and also to allow for proper sign spacing in accordance with GDOT Signing and Marking Guidelines and the MUTCD.

The DB Team shall contact Georgia Logos, LLC 770-447-6399 prior to removing or resetting LOGO signs. Cost for removing, resetting, and maintaining LOGO signs as necessary to be included in the overall bid price. Existing LOGO signs shall be maintained during construction on a moveable structure. Any LOGO signs damaged during construction shall be replaced at no additional cost.

16.3.6 Sign Support Structures

DB Team shall determine foundation types and design sign foundations based upon geotechnical surveys/tests. Sign support structures shall be designed in accordance with GDOT Signing and Marking Design Guidelines and AASHTO's *Standard Specifications for Structural Supports for Highway Signs, Luminaires, and Traffic Signals*. The DB Team design of the structural support for overhead signs shall be provided to GDOT and must provide for the maximum allowable sign area that can be placed onto the structure support as defined in *GDOT Signing and Marking Guidelines*. Type III structures shall be designed to accommodate at least five hundred fifty (550) square feet of sign area. A GDOT structural support number shall be placed on the outside vertical support of structure. Requirements for the alphanumeric code are specified in the GDOT *Signing and Marking Design Guidelines*. DB Team shall use sign bridge (Type I), butterfly (Type III), or combination (Type IV) in accordance with GDOT's related standard specifications, policies, guidelines, and Volume 3 Manuals. Designs for sign supports shall also comply with requirements in Sections 13 (Structures). Type II cantilever signs may not be used for sign installations.

16.3.7 Permanent Pavement Marking

DB Team shall ensure that the design and installation of all pavement markings including Raised Pavement Markings (RPM) comply with the MUTCD, GDOT Signing

and Marking Guidelines, GDOT standards and details and in accordance with GDOT specifications. Ensure use of contrasting black border around pavement markings on bridges and all other concrete surfaces. RPM's shall be installed where new pavement marking is provided.

16.3.8 Permanent Signalization

16.3.8.1 Traffic Signal Requirements

DB Team shall design and install fully-actuated permanent traffic signals at all GDOT-permitted intersections within Project limits. In addition, DB Team shall modify, as appropriate, any existing traffic signals impacted by the Project. DB Team shall coordinate with GDOT and the applicable local Governmental Entities to define appropriate traffic signal design requirements, local agency oversight of DB Team's Work, and final acceptance of traffic signals. DB Team shall coordinate with local Governmental Entities for synchronization of traffic signal networks.

DB Team shall provide interconnection systems between new or modified signals and any other signal system within the Project Site as required by GDOT or the applicable local Governmental Entity. Connection of the completed intersection to the Governmental Entity's communications network shall be coordinated with the Governmental Entity. DB Team shall ensure continuous communication with the traffic signal system within the Project Site, and shall provide all communication hardware/equipment for GDOT or the applicable local Governmental Entity to communicate with the signal systems within the Project Site.

DB Team shall provide both pedestrian and vehicle detectors at all traffic signals per GDOT or applicable local Governmental Entity's (maintaining agency) requirements within the Project Site.

DB Team shall coordinate with TMC and the District Traffic Operations to ensure that all signalized locations are permitted prior to submission of Final Plans.

16.3.8.2 Traffic Signal Timing Plans

DB Team shall coordinate and implement signal timing plans that optimize traffic flows and provide signal coordination with adjacent intersections and arterials for all existing and new traffic signals, modified signals, and interconnected signals. DB Team shall obtain acceptance with GDOT or applicable local Governmental Entity for the initial signal timings and updating signal timing as necessary to maintain optimized flow.

16.3.8.3 Traffic Signal Permit

As part of the design process, DB Team shall be responsible for obtaining necessary traffic signal permit or permit revisions by following applicable GDOT's or local Governmental Entities' signal permit process, prior to any new signal installation or existing signal modification.

16.3.8.4 Traffic Signal Support Structures

DB Team shall coordinate with GDOT and the local Governmental Agencies to determine the type of traffic signal support structures. DB Team shall obtain the maintaining agency's acceptance of traffic signal support structures to be used on new signal installations.

16.4 Construction Requirements

16.4.1 Permanent Signing and Delineation

DB Team shall use established industry and utility safety practices when erecting or removing signs located near any overhead or underground utilities, and shall consult with the appropriate Utility Owner(s) prior to beginning such work.

DB Team shall maintain all applicable advance guide signs and/or exit direction signs in place at all times and shall not obstruct the view of the signs to the motorist. DB Team shall replace any other removed signs before the end of the work day.

Signing reflectivity shall conform to the current edition of the MUTCD and *GDOT Signing and Marking Guidelines*.

16.4.2 Permanent Pavement Marking

DB Team shall install required full pattern pavement markings on all pavement courses before any roadway is opened to traffic in conformance with the MUTCD, GDOT Signing and Marking Guidelines and GDOT's standards, details and specifications. RPM's shall be placed and/or maintained when the roadway is open to traffic.

16.4.3 Permanent Signalization

DB Team shall coordinate with the Utility Owner(s) and ensure necessary power service is initiated and maintained for permanent signal systems.

16.5 Deliverables

All deliverables shall be presented to GDOT in both hardcopy, and electronic form compatible with GDOT software as required by the Volume 3 Manuals (Technical Documents) and the DB Documents.

16.5.1 Permanent Signing and Delineation

Before placing any permanent signs, delineation, third-party signs, or non-standard sign structures, DB Team shall provide GDOT a layout indicating the proposed location of such items. Overhead sign structures will be reviewed and accepted by GDOT Bridge Department.

16.5.2 Permanent Pavement Marking

Before placing any permanent pavement markings, DB Team shall provide GDOT a layout indicating the proposed location of such items.

16.5.3 Permanent Signalization

DB Team shall, after implementing accepted timing plans, provide GDOT and Governmental Entities (maintaining agencies) responsible for operation and maintenance of the traffic signal system legible written documentation of all intersection characteristics, timing plan parameters and installation information necessary for GDOT or the Governmental Entity to incorporate the completed signal installation into the central intersection management software being used.

17 INTELLIGENT TRANSPORTATION SYSTEMS

17.1 General Description

This specification addresses the requirements for the Intelligent Transportation System (GDOT ITS) including surveillance, detection, dissemination, communication, and maintenance during construction.

The improvements, infrastructure, and responsibilities are for Georgia Department of Transportation Intelligent Transportation Systems (GDOT ITS) are generally described below.

17.1.1 General Purpose

This work includes, but is not limited to, Georgia Department of Transportation Intelligent Transportation Systems (GDOT ITS), communication network, power, backup power systems, structures, and other required elements within the Right-of-Way required to accommodate the project. The GDOT ITS includes, but is not limited to, Changeable Message Signs (CMS), detection systems, closed circuit television (CCTV) Pan Tilt Zoom (PTZ) cameras, night vision CCTV cameras, and the communication network including the fiber backbone.

17.1.2 Reserved

17.1.3 Transportation Management Center (TMC) Improvements

If required, Transportation Management Center (TMC) Improvements shall be managed by GDOT and implemented by the Transportation Management Center System Integrator (TMC SI, and also referred to as the NaviGAtor ITS Contractor). The Transportation Management Center Improvements include, but are not limited to, work station additions/modifications, NaviGAtor system and software modifications, integration services, and other related improvements as necessary to connect, communicate with, and operate GDOT ITS.

The DB Team is responsible for assuring that all software it incorporates for any aspect of the Project is compatible with software used by GDOT as provided in the Technical Provisions. Prior to using any software or version of software not then in use by GDOT, The DB Team must obtain written acceptance from GDOT. In addition, DB Team shall provide to GDOT, at The DB Team's cost, any software, licenses and training reasonably necessary to assure that GDOT is able to implement compatible usage of all software utilized by The DB Team. Compatible shall mean that The DB Team-provided electronic file(s) may be loaded or imported and manipulated by GDOT using its software with no modifications, preparation or adjustments. All electronic information submitted to GDOT shall be in native format or, if not available, legible.

The DB Team is responsible for ensuring that the civil infrastructure is in place, in accordance with established milestone dates, and for coordination of work as required to allow for the TMC SI to complete their software development, installation and integration responsibilities with DB Team installed devices.

17.2 Design and Construction Requirements

The DB Team shall determine the number and specific locations of all ITS components. The level of ITS deployment shall meet the requirements as outlined in the GDOT's *ITS Strategic Deployment Plan (SDP).*

DB Team shall prepare a preliminary and final ITS layout including network communication schematic diagrams and specification for review and acceptance by GDOT to ensure adequate planning of the ITS implementation and components' consistency and compatibilities with adjacent GDOT's ITS components. The plan at a minimum shall provide horizontal and vertical plan location, proposed equipment, proposed structures, and types of materials for the entire ITS plan. The DB Team shall follow the current version of the GDOT Navigator ITS Design Manual for its ITS design.

The DB Team shall conduct all work necessary to design, procure, furnish, install, integrate (as defined in this section and associated special provisions), and maintain ITS devices and infrastructure on the Project, including but not limited to, electrical power, fiber-optic communications, ITS cabinets, maintenance access, junction boxes, and conduits, all in accordance with GDOT standards and specifications and Special Provisions contained herein. Each ITS device, regardless of its purpose, provided by the DB Team shall support, at a minimum, NTCIP-compliant interface protocols so that integration of each device/controller with NaviGAtor is more efficiently supported. All civil, structural, electrical, communication infrastructure, software and firmware installed by the DB Team and required to support the GDOT ITS.

It is the DB Team's responsibility to survey and locate the existing ITS equipment including, but not limited to, all fiber trunk lines, electrical trunk line lines, conduit duct banks, communication hubs, drop fiber and electrical lines, as well as ITS devices. The DB Team shall perform preventative maintenance, respond to problem notifications from GDOT, make any needed repairs or upgrades as necessary, and repair ITS devices or communications damaged by any party during construction.

17.3 Testing and Acceptance

The DB Team shall submit test plans to GDOT for review and acceptance.

DB Team testing of specific ITS technologies, electrical components, communication network and infrastructure, Communication Hubs and equipment cabinets shall follow the test requirements in the following related sections in the GDOT Standard Specifications:

- Section 631 – Permanent Changeable Message Signs;
- Section 682 – Electrical Wire, Cable, and Conduit (Multi-cell and Continuous Flexible Conduit System);
- Section 797 – Hub Building;
- Section 935 – Fiber Optic Cable;
- Section 936 – Closed Circuit Television (CCTV);
- Section 937–Detection System;
- Section 939 – Communication and Electrical Equipment;
- Section 940 – NaviGAtor Advanced Transportation Management System Integration

GDOT ITS, Communication Hub and Communication Network testing and final acceptance processes are to be conducted according to the applicable GDOT Standard Specifications, Special Provisions and as described herein.

17.3.1 End-To-End Testing

Refer to Section 21.6.2.

17.4 Warranty

The DB Team shall provide all warranties as set forth in the DB Agreement and specified in the Standard Specifications, Special Provisions and contained herein. In the event of conflicting warranty periods between the above, the longest warranty period identified shall be provided by the DB Team. All warranties shall commence upon Final Acceptance. Any additional costs incurred by the DB Team to meet the warranty requirements shall be the sole responsibility of the DB Team.

17.4.1 Protection of Existing ITS

The DB Team shall ensure the existing ITS (if exists) is protected from damage and properly maintained,.

If necessary, any disruption to the ITS System shall be planned and coordinated with GDOT and should meet the requirements per the Project Special Provisions.

17.4.1.1 ITS Maintenance and Repair Plan

The DB Team shall submit an ITS Maintenance and Repair Plan for GDOT's acceptance within thirty (30) calendar Days of Notice to Proceed (NTP). The Plan shall outline the procedures and resources the DB Team shall utilize to maintain and conduct repairs on the ITS field elements and infrastructure as necessary. The DB Team shall conduct the field survey and provide a complete inventory of all ITS components and infrastructure in the Project limits within thirty (30) calendar Days of NTP. The inventory shall include components and infrastructure to be removed and replaced, to be removed and relocated and to be left in place. The ITS Maintenance and Repair Plan shall

specifically address any ITS field elements or components not working at the time the DB Team's maintenance responsibilities commence.

17.4.1.2 ITS Locates

The DB Team shall be required to locate the electrical and fiber optic conduits and cables within the construction limits. The DB Team shall obtain available ITS as-built and location information from GDOT upon NTP and shall be fully responsible for locating all existing, temporary and new ITS infrastructure and facilities until Final Acceptance. The DB Team shall be responsible for providing ITS locates requested by other consultants, contractors and/or utility companies within forty-eight (48) hours of receiving requests from GDOT or from any other source from NTP to Final Acceptance. The DB Team shall notify GDOT of the date and location of each Locate Request and the date at which the locate was completed.

The DB Team shall fully cooperate with all utility owners during the design, survey and construction activities of the Project. The DB Team shall call Georgia 811 a minimum of forty-eight (48) hours and a maximum of ninety-six (96) hours before any excavation work.

17.4.1.3 ITS Preventative Maintenance

The DB Team shall perform all preventative and routine maintenance services on DB Team installed infrastructure and devices within the project area at the periodic intervals shown below:.

CCTV Field Elements	Every third month
CMS Field Elements	Every third month
Cabinets	Every third month
VDS, MVDS, MTDS / Loops	Every third month
Communication Hubs	Every third month

The DB Team, in cooperation with the GDOT's Project Manager, shall provide a detailed preventative and routine maintenance checklist with a timetable for each component of the System (e.g., CCTV Cameras, CMS components, Vehicle Detection Sensors, Communications Devices, etc.)

The DB Team shall create a routine maintenance checklist within thirty (30) calendar Days from NTP for all existing ITS field elements and all new ITS field elements as they are brought into the System during this Project.

Preventative and Routine maintenance services include, but are not limited to:

- Dust removal from all equipment, cabinets, and enclosures;
- CCTV domes shall be cleaned; inspected, re-pressurized and video feed shall be verified for quality thereafter;
- Paint Touch-up;
- Air filter replacement;
- Check status of door locks and any entry detection sensors, if so equipped;
- Visual inspection of device, cabinet and enclosure exteriors: check for corrosion, punctures, graffiti, or signs of vandalism;
- Visual inspection of status LEDs of equipment;
- Visual inspection of all fans inside equipment and/or cabinet;
- Visual inspection of all light fixtures for proper operation;
- Visual inspection of all wiring for indication of decay, and/or inflicted damage;
- Visual inspection of surge protection devices;
- Visual inspection of the status for all breakers and fuses;
- Physical test and inspection of grounding system to ensure adequate grounding at all locations;
- Physical inspection of all connectors and cable assemblies to verify connections, correct as needed;
- Obtain Ohm reading to check grounding;
- Physical inspection of all security devices and components and testing of those that operate electronically;
- Check UPS functionality by simulating a power failure at the disconnect;
- Fumigation of all cabinets and enclosures against pests and/or vermin;
- Removal of pests or vermin along with any excrement or habitat leftover from their presence;
- Weed and grass control within forty-eight (48) inches around all cabinets, structures and splice enclosures; and,
- For trailer-mounted portable cameras, service includes deployment of camera one time during the maintenance period or storage if not deployed plus any applicable trailer fees.

17.4.1.4 ITS Repair and Replacement

The purpose of this requirement is to have the DB Team maintain the existing system within the Project. ITS maintenance shall begin on the date the GDOT issues NTP until the date of written Final Acceptance. During the ITS maintenance period, the DB Team shall keep the existing ITS field elements and communication infrastructure in service at all times. The DB Team shall place new ITS field elements and communication infrastructure in service as soon as possible after installation. Short duration outages are allowed as ITS field elements are replaced or relocated, if they are damaged in any manner, or if they are required to be down for routine preventative maintenance. The project Speical Provisions provides minimum requirements for outages and liquidated damages if these requirements are not met.

The DB Team's responsibilities include all necessary maintenance (responding to TMC notices of failures and routine preventative maintenance), repairing and replacing ITS field elements damaged for any reason, including natural calamities (hurricane, thunder storms, lightning, etc.), vandalism, traffic incidents or by actions of the DB Team. In addition, if ITS field elements or infrastructure is damaged by the DB Team, the DB Team shall repair or replace the ITS field element or infrastructure. The DB Team shall designate a primary and alternate contact to receive notices of failures. These individuals shall be accessible twenty-four (24) hours a day, seven (7) days a week, throughout the duration of the DB Team's maintenance responsibility. The contact method shall include cell phone, home phone, e-mail and/or fax as preferred by the DB Team. The DB Team shall respond to notices of failures as follows:

Table 17-1: ITS Maintenance Response Requirements

Work Priority	Description	Response Time
EMERGENCY	Any SYSTEM infrastructure item that is in a condition that is unsafe and/or may present a life threatening condition (e.g., structural failure or potential structure failure due to traffic incident or weather damage, electrical risks, or potential fire risks).	1 Hour On-Site
URGENT	Any SYSTEM component which results in more than one field device being down or unusable by the TMC, or creates the potential for a system-wide outage.	3 Hours On-Site
PRIORITY	Any SYSTEM infrastructure or component service request for general service or installation as deemed a priority by the GDOT's Project Manager.	6 Hours On-Site
NORMAL	All other calls	Next Business Day (GDOT Holidays Excluded)

The DB Team shall submit an ITS responsive diagnostic and repair plan to GDOT for acceptance within thirty (30) days of NTP. At a minimum the repair plan shall include, but not be limited to:

- Acknowledgement of all notices of failure from GDOT within one hour of receipt. Acknowledgement shall be by e-mail or fax to the TMC and Project Manager;
- Start of diagnostics and repair within the time frames above;
- Except when the pole has been destroyed by a third party, repair all CCTV outages within twenty-four (24) hours of notification. Having a qualified maintenance technician on call twenty-four (24) hours a day, seven (7) days a

week, holidays included, for the duration of the Contract to respond to emergency repair/replacement work;

- Providing a call list of direct telephone numbers that shall be answered twenty-four (24) hours a day, seven (7) days a week, including holidays (an answering service is not acceptable). The call list shall be set up in call order;
- Plan for repair of CMS, VDS, MVDS and network devices;
- Plan for repair of fiber cuts or outages.

The DB Team shall provide a minimum of forty-eight (48) hour or as specified in the project Special Provisions, whichever is greater, notice for intentional outages for ITS field element relocations and repairs. Repairs shall be coordinated (notify when an ITS field element is going down and when it is back in service) with the TMC and GDOT Project Manager.

18 TRAFFIC CONTROL

18.1 General Requirements

DB Team shall design and construct the Project, in conformance with the requirements stated in this Section 18, to provide for the safe and efficient movement of people, goods, and services, through and around the Project while minimizing negative impacts to Users, residents, and businesses.

The design of the Project shall be in accordance with Volume 3 Manuals (Technical Documents) and the DB Documents.

18.2 Administrative Requirements

18.2.1 Transportation Management Plan

DB Team shall prepare and implement a Transportation Management Plan (TMP), if required, that meets the requirements of the FHWA Work Zone Mobility and Safety Program which can be found at:

http://www.ops.fhwa.dot.gov/wz/resources/final_rule/tmp_examples/tmp_dev_resources.htm

At a minimum, the TMP shall include descriptions of the qualifications and duties of the traffic engineering manager, traffic control coordinator, Worksite Traffic Control Supervisor (WUCS), and other personnel with traffic control responsibilities. Additional requirements of the TMP are below:

- Procedures to identify and incorporate the needs of transit operators, Utility Owners, Governmental Entities, local governmental agencies, Emergency Service providers, school districts, business owners, and other related Users, Customer Groups or entities in the Project corridor and surrounding affected areas.
- Procedures for obtaining acceptance of detours, road and lane closures and other traffic pattern modifications from applicable Governmental Entities, and implementing and maintaining those modifications. At a minimum these procedures must include:
    - DB Team shall notify the traveling public by placing CMS's a minimum of seven (7) Days in advance of actual roadway closure or major traffic modifications. Where available and when possible, the DB Team shall coordinate and utilize Overhead Changeable Message Signs on the regional ITS system.
    - DB Team shall utilize off-duty uniformed police officers for mainline lane closures.
- Procedures for signing and marking transitions during construction from one stage to the next and from interim to permanent signing and marking.

- Procedures for maintenance and replacement of traffic control devices, including pavement markings and traffic barriers, if used.
- Procedures to regularly evaluate and modify, if necessary, traffic signal timings, and the procedures for the development, GDOT acceptance (and local Governmental Entity acceptance, if necessary), implementation, testing, and maintenance of all affected signals.
- Procedures to coordinate with the appropriate Governmental Entities operating signal networks along the Project or Project detour routes to ensure temporary system compatibility, establish responsibilities for temporary signal installation, maintenance, operation and removal, and coordinate traffic signal timing with local signal networks.
- Procedures and process for the safe ingress and egress of construction vehicles in the work zone
- Provisions to provide continuous access to established truck routes and Hazardous Material (HazMat) routes, and to provide suitable detour routes, including obtaining any acceptances required by the appropriate governmental entities for these uses.
- Procedures to modify plans as needed to adapt to current Project circumstances.
- If required, procedures to communicate TMP information to DB Team's public information personnel and notify the public of maintenance of traffic issues in conjunction with the requirements of Section 3, of Volume 2,
- Descriptions of contact methods, personnel available, and response times for any deficiencies or Emergency conditions requiring attention during off-hours.

The TMP shall be submitted within one hundred twenty (120) Days from NTP 1 and must be accepted by GDOT prior to NTP 3.

The safe, convenient passage of the traveling public shall be ensured by the DB Team at all times. The DB Team shall prepare contingency traffic control plans for use in relieving travel delays. If in GDOT's sole opinion, sustained traffic control placement creates unnecessary hindrance to the travelling public, the DB Team shall implement contingency plans that will alleviate traffic congestion immediately or cease traffic interruptions immediately upon notification from GDOT.

18.3 Design Requirements

18.3.1 Traffic Control Plans

DB Team shall use the procedures in the TMP (if applicable) and the standards of the MUTCD, AASHTO's *Roadside Design Guide,* as well as comply with GDOT *Special Provision 150 – Traffic Control* to develop detailed traffic control plans which provide for all Construction Phases and construction stages, as well as all required traffic shifts procedures.

DB Team shall produce a traffic control plan for every Construction Phase that impacts traffic. Each traffic control plan shall be submitted to GDOT for review a minimum of fourteen (14) Days

prior to implementation. The traffic control plan shall include details for all detours, traffic control devices, striping, and signage applicable to each Construction Phase. Information included in the traffic control plans shall be of sufficient detail to allow verification of design criteria and safety requirements, including typical sections, alignment, striping layout, drop off conditions, and temporary drainage. The traffic control plans shall clearly designate all temporary reductions in speed limits. Changes to posted speed limits will not be allowed unless specific prior acceptance is granted by GDOT.

Opposing traffic on a divided roadway shall be separated with appropriate traffic control devices in accordance with AASHTO's *Roadside Design Guide*, the MUTCD based on the roadway Design Speed, and Volume 3 Manuals (Technical Documents).

DB Team shall maintain signing continuity on all active roadways within or intersecting the Project at all times.

Throughout the Term, DB Team shall ensure all streets and intersections remain open to traffic to the greatest extent possible by constructing the Work in stages. DB Team shall maintain access to all adjacent streets and shall provide for ingress and egress to public and private properties at all times during the term of the Project.

DB Team shall prepare public information notices, if required, in coordination with Section 3 (Public Information and Communications), in advance of the implementation of any lane closures or traffic switches. These notices shall be referred to as Traffic Advisories.

18.3.1.1 Roadway Guidelines

DB Team shall produce traffic control plans for periods of construction in accordance with Volume 3 Manuals (Technical Provisions), Special Provision Section 150, and the DB Documents document.

18.3.1.1.1 *Design Parameters for Traffic Control*

Design Vehicle: Turning movements shall accommodate a design vehicle specified by the *GDOT Design Policy Manual* for specific road classifications. Turning movements on all other local streets and driveways shall, at a minimum, provide similar characteristics as existing Geometry.

Work Zone Speed Limits: The work zone speed limits on Interstate and State Highways shall be in conformance with *Special Provision 150*.

Number of Lanes: Except as allowed by Section 18 of Volume 2, the minimum number of lanes to be maintained shall be the number of lanes currently available on each controlled access facility, lane closures on other roadways may be considered so long as all traffic patterns and accesses are not reduced and are maintained.

Lane Widths: During construction, the minimum lane width for main lanes, frontage roads and major crossing streets is eleven (11) feet. For minor crossing streets, GDOT may, in its sole discretion, allow ten (10') lanes in limited circumstances during construction for short distances after reviewing the DB Team's traffic control plan.

18.3.1.1.2 *Allowable Shoulder/Lane/Roadway Closures and Traffic Stage Changes*

DB Team shall provide GDOT and appropriate Customer Groups a minimum of two weeks advance notice for lane/shoulder closures and/or traffic stage changes planned to be in effect longer than twenty four (24) hours, and a minimum of twenty four (24) hours advance notice for lane closures that are planned to be in effect less than twenty four (24) hours, using all appropriate tools as needed. The DB Team shall coordinate the closure restrictions with GDOT on all lane/shoulder closures (or an event that results in lane closures) into GDOTs ITS web based information tool.

Closures must be coordinated with adjacent projects to ensure the safe convenient passage of the traveling public. During construction of the Project, GDOT will facilitate coordination with all local entities for Traffic Control.

Lane and Shoulder Closure During Design-Build Period

DB Team may reduce the number of travel lanes in accordance with the restrictions in Section 18 of Volume 2.

The DB Team shall not install lane and shoulder closures, perform flagging, or move equipment on the travel way of any roads or streets from the Wednesday before Thanksgiving Day to the first Business day after New Year's Eve yearly between the hours of 5:00 a.m. to 11:00 p.m. Monday thru Friday and between the hours of 7:00 a.m. to 11:00 p.m. Saturday and Sunday.

Additional lanes may be closed during off peak or nighttime hours upon receipt of written permission from GDOT. Consideration will be given to traffic data collected in VPH/lane formatting during allowed closure periods that clearly demonstrates industry accepted traffic flow ratios can be maintained.

Full Roadway Closure

DB Team will not be permitted for any full (all lanes and shoulders) roadway closures unless accepted by GDOT and Governmental Entities having jurisdiction of roadways affected by the closure.

GDOT will have the right to lengthen, shorten, or otherwise modify the foregoing restrictions as actual traffic conditions may warrant. The detour route for these full roadway closures shall be limited to usage of the on and off ramps at the mainline interchange locations. DB Team shall utilize off-duty uniformed police officers for all detours.

Any complete roadway closure will require a Traffic Control Plan to be submitted and accepted by GDOT and Governmental Entities having jurisdiction of roadways affected by the closure. Availability of frontage roads, ramp locations and detour distances shall be considered in the design.

Holiday Restrictions

No work that restricts or interferes with traffic shall be allowed from 12:00 noon on the day preceding to 10:00 pm on the day after the following holiday schedule. GDOT has the right to lengthen, shorten, or otherwise modify these restrictions as actual traffic conditions may warrant.

- Memorial Day Weekend (Friday through Monday)
- Independence Day (July 3 through noon on July 5th)
- Labor Day Weekend (Friday through Monday)
- Thanksgiving Holiday (Wednesday through Sunday)
- Christmas Holiday (December 23 through 26)

18.4 Construction Requirements

Construction shall be in accordance with GDOT accepted DB Team's TMP, as well as applicable provisions of the MUTCD and GDOT Special Provision section 150 – Traffic Control.

18.4.1 DB Team Responsibility

If at any time GDOT determines DB Team's traffic control operations do not meet the intent of the TMP or any specific traffic control plan, DB Team shall immediately revise or discontinue such operations to correct the deficient conditions.

DB Team shall provide GDOT the names of the Certified Workzone Traffic Control Supervisor and support personnel, and the phone number(s) where they can be reached twenty four (24) hours per day, seven (7) days per week.

18.4.2 Access

Existing bicycle and pedestrian access and mobility shall be maintained across all cross streets. Access to existing transit stop locations shall be maintained during construction or reasonable alternative locations shall be provided, if applicable.

18.4.3 Detours

DB Team shall maintain all detours. A pavement transition, required in accordance with AASHTO's *Roadside Design Guide*, GDOT guidelines and the MUTCD based on the roadway Design Speed of the section shall be provided at all detour interfaces.

19 MAINTENANCE DURING THE DESIGN-BUILD PERIOD

19.1 General Requirements

The DB Team shall maintain the Project from NTP 3 through the remainder of the Design-Build Period in a manner that provides a safe and reliable transportation system. Upon NTP 3, the DB Team shall be fully responsible for maintenance as required by GDOT Standard Specification 105.14.

19.1.1 Reserved

19.1.2 GDOT Obligation to Repair

In the period between the Effective Date and the commencement of construction work, GDOT will reasonably perform the type of routine maintenance of each Element Category of the existing improvement which normally occurs in GDOT's highway maintenance and repair program. GDOT is not obligated to extend the Residual Life of any Element through reconstruction, rehabilitation, restoration, renewal, or replacement.

19.2 Construction Maintenance Limits Plan

The DB Team shall specify the physical boundaries of the DB Team's maintenance responsibilities for the Construction Work during the Design–Build Period. The Construction Maintenance Limits Plan can be provided as a drawing or set of drawings that highlight the exact area of the proposed construction and maintenance responsibilities within the ROW, as well as the limits of any Additional Properties to be acquired for the Project. This drawing will serve as the boundary for Construction Work and will also be used as the exact limits for DB Team to maintain any Element required to construct the Project beginning at the time of NTP3 through Final Acceptance. The DB Team shall be responsible for all maintenance activities, in accordance with the GDOT Standard Specifications, Construction of Transportation Systems, within these limits that is impacted due to the construction activity of Developer, including but not limited to:

- Pavement maintenance including pothole patching, concrete patching, striping, etc.;
- Existing ITS system and Drainage System continuity;
- Landscaping repair;
- Utility Adjustments; and
- Existing lighting system.

The DB Team shall provide the final Construction Maintenance Limits Plan no later than one hundred and fifty (150) Days from NTP1 or prior to the start of a construction phase (see Section 23). The drawing should show hash marks or a method to clearly depict the area of the Construction Maintenance Limits. The DB Team is required to depict in

the Construction Maintenance Limits Plan any and all proposed staging and lay down areas. All staging and lay down areas must have prior approval by GDOT.

Notwithstanding GDOT's approval of the Construction Maintenance Limits, The DB Team shall be responsible for any and all maintenance for any area(s) encroached on by the DB Team during the performance of the Construction Work.

The DB Team shall provide Construction Maintenance Limits phasing plan per the approved Construction Phasing Plan required in Section 23.

20 BICYCLE AND PEDESTRIAN FACILITIES

20.1 General Requirements

This Section 20 includes requirements with which DB Team shall design and construct all bicycle and pedestrian facilities for the Project, if required. DB Team shall ensure the bicycle and pedestrian facilities of this Project support GDOT's commitment to integrate bicycle and pedestrian travel into Project development. DB Team shall coordinate the Elements of this Project with the existing and planned trails and other facilities of local and county administrations for pedestrians and cyclists.

20.2 Design Requirements

20.2.1 Bicycle Facilities

DB Team's bicycle facilities shall be consistent with state, regional, and local bicycle and pedestrian plans, and accommodate proposed and existing bicycle paths and crossings, and on-street bicycle facilities. DB Team shall coordinate their design with Governmental Entities design to ensure consistency of use with existing and accommodating proposed bicycle facilities. Refer to GDOT - Design Policy Manual, Chapter 9.

20.2.2 Pedestrian Facilities

DB Team shall design, construct, and maintain sidewalks where sidewalks currently exist and where required by State or Federal regulations. Sidewalks shall comply with the *Title II provisions of the Americans with Disabilities Act (ADA) Accessibility Standards*. DB Team shall install pedestrian signals and curb ramps at all existing and proposed signalized intersections. All pedestrian facilities shall be designed to incorporate ambulatory, visibility, and auditory needs of all users.

20.2.3 Final Plans

Consistent with the requirements of the DB Documents and all RIDs, the DB Team shall incorporate the following elements relating to bicycle and pedestrian facilities into the Preliminary and Final Plans:

- Alignment, profile, cross-section, and materials
- Points of connection to existing and proposed bicycle and pedestrian facilities, such as a connection to an existing or proposed multi-use trail, sidewalk, or bike lane on an adjacent facility
- Signing, signalization, and pavement markings
- Methods of illumination, where applicable
- Requirements of the Landscape Enhancement Plan and Hardscape Enhancement Plan

21 RESERVED

22 SOUND BARRIERS

22.1 General

DB Team shall design sound barriers walls to be similar in color, texture, and style that are consistent with other Elements present in the entire Project such as structures, landscaping, and other highway components.

DB Team shall design and construct the sound barriers to achieve the decibel reduction requirement in the environmental approval. A final decision on the installation of sound barriers will be made upon DB Team's completion of additional detailed noise abatement analysis based on the Final Plans, applicable federal guidelines, and public outreach to property owners and dwellers. Coordination with property owners and dwellers will be conducted prior to the final decision on the installation of the sound barriers. If coordination with property owners results in a sound barrier or portion of a sound barrier to not be installed, this shall be considered a GDOT Change. The DB Team is responsible to implement the sound barriers required in the final noise abatement analysis. All materials used to construct the sound barriers shall conform to the requirements of the GDOT Qualified Products List (QPL).

Interlocking Steel Panels (Type B) and Treated Timber Panels (Type D) as listed in the Standard Specifications, Construction of Transportation Systems, Section 624.1 for sound barriers shall not be permitted, except that Interlocking Steel Panels (Type B) can be used on existing bridge barriers and on existing retaining walls. The DB Team is to provide a final structural design to the existing infrastructure that meets the requirements of the location(s) of the sound barriers as provided in the approved environmental document.

Sound barriers shall include access doors at regular intervals for maintenance. Access doors shall be located in sound barrier walls that are greater than fifteen hundred (1500) feet in length. An access door shall be located at the mid-point of the wall length for walls between fifteen hundred (1500) feet and two thousand (2000) feet. Access doors shall be spaced approximately every one thousand (1000) feet for sound barrier walls greater than two thousand (2000) feet in length. Access doors shall not be located on sound barrier walls mounted to bridges, retaining walls, or where a steep or vertical drop-off of the final grade is occurring.

Color scheme of sound barriers shall be consistent throughout the project and shall be aesthetically pleasing as determined by GDOT.

23 SUBMITTALS

23.1 General

The DB Team shall provide Project Submittals, in both electronic and hard copy format, as required to obtain any acceptance or final Release for Construction (as applicable) by GDOT and to demonstrate compliance with the DB Documents, Government Acceptances, and regulations. Volume 2 (Technical Provisions) provides a list of some of the required submittals. The Volume 3 Manuals (Technical Documents) or other requirements in the DB Documents may require additional Submittals. This list is intended to be a guide for coordinating reviews and facilitating the Work.

The DB Team may design and construct the Project in multiple phases. A Construction Phase is a portion (segment) of the overall Project. If the Project will be designed and constructed in multiple phases, then the DB Team shall provide a Construction Phasing Plan and Submittals Schedule per construction phase within thirty (30) days from NTP 1. The Construction Phasing Plan shall provide logical termini for each proposed segment or phase of the Work and must consider any phasing of required acceptances. For a given Construction Phase, DB Team shall be allowed to either submit a complete set of drawings or make a series of Staged Design Submittals (components). The timing and content of Staged Design Submittals must be logical and shall include or be preceded by related items (e.g., bridge submittals must include or be preceded by related highway geometry; a bridge and its related retaining walls must be submitted together; etc.). The Submittals Schedule shall identify all proposed Staged Design Submittals and what components will be included in each. The DB Team must obtain GDOT acceptance of the Construction Phasing Plan and the Submittals Schedule prior to providing any design submittals for GDOT review. In addition, a "Design Submittal Guide / Index" showing a proposed index of plan sheets for each Construction Phase must be submitted and accepted prior to providing any design submittal. Once accepted, this Design Submittal Guide / Index shall be updated and provided with each subsequent design submittal. File naming of each plan sheet in a submittal shall correspond to the final index name of the plans for ease of reference to create the final set of drawings. The Design Submittal Guide / Index shall also include all reports, specifications, studies, calculations, etc.

Sufficient review and revision time shall be provided in the schedule and account for possible multiple re-submittals to secure a final Released for Construction prior to starting construction on any particular Element of the Work. Construction cannot proceed on any of the work until the design submittal has been reviewed, accepted and Released for Construction as described in Section 23.3 below.

23.2 Design Submittals and Progress of Design Work

Each required Submittal shall be delivered to GDOT in conformance of the review times provided in Volume 2, Section 23.2. The times provided in Volume 2, Section 23.2 are specifically for the review period required for GDOT to comment and GDOT to

subsequently accept if all requirements of the DB Documents are met. Accuracy, completeness, and time spent to address GDOT comments are the responsibility of the DB Team. Notwithstanding the foregoing, notices sent after 12:00 p.m. Eastern Standard or Daylight Time (as applicable), including all notices, correspondence or communications (including e-mail and facsimile) received after 12:00 p.m. shall be deemed received on the first business day following delivery (that is, in order for a fax to be deemed received on the same day, at least the first page of the fax must have been received before 12:00 p.m.).

No fabrication, casting or construction will occur until all related design review and shop drawing review comments are resolved and the corresponding drawings and specifications have been accepted by GDOT and stamped "Released for Construction". All design submittals shall be complete along with all the supporting information necessary for review. The work must represent logical work activities and must show impacts on subsequent work on this Project. Any modification to the component construction due to subsequent design changes as a result of design development is solely at the DB Team's risk.

23.2.1 Construction Phasing and Additional Submittal Requirements

The DB Team is responsible for obtaining any Government Approvals or other approvals required to allow for implementation and construction of the phasing plan. The DB Team shall not begin any work including any land disturbing activities for the Construction Phase contemplated for construction until the following have been completed or accepted by GDOT, FHWA, and/or Governmental Entity as required:

- All required Management Plans are accepted and NTP 3 is issued (Construction Phase or entire Project)
- Acceptance of the Construction Phasing Plan
- Acceptance of the Construction Maintenance Limits Plan for the proposed Construction Phase of work
- Acceptance of the Submittals Schedule (Design Submittal Guide)
- Acceptance of the Project Baseline Schedule
- Acceptance of the Preliminary Plans for the entire Project by GDOT and FHWA (if applicable)
- Acceptance of the Drainage Report (for the contemplated Construction Phase)
- Acceptance and subsequent Release for Construction of the Final Plans for the construction contemplated (Construction Phase or entire Project).
- Utility Certification or recertification by GDOT and FHWA, as applicable (Construction Phase or entire Project)
- NEPA/GEPA re-evaluation by FHWA and/or GDOT (as applicable)
- Environmental recertification by GDOT
- Acceptance of any required Design Variances or Design Exceptions (Construction Phase or entire Project)

- Approved Permits (including but not limited to the Nationwide 14 USACE Section 404 permit and traffic signal permits)
- Acceptance of Erosion Sedimentation and Pollution Control Plans (Construction Phase or entire Project)
- Executed NPDES Notice of Intent (NOI) (Construction Phase or entire Project)
- Acceptance of Construction Quality Management Plan
- Acceptance of Traffic Control Plan (Construction Phase or entire Project)
- Acceptance of Traffic Management Plan
- Utility Agreements, Utility Encroachment Permits, Utility Relocation Plans, Utility Retentions (as required) and/or Contractor Certification of "No-Conflict"
- Provide the existing GIS data and existing mapping as required in Section 12.3.2.1

Staged Design Submittals

Once the Preliminary Plans for the entire Project have been accepted by GDOT and FHWA (if applicable), the DB Team shall be allowed to submit Staged Design Submittals (components) instead of a completed set of drawings for an entire accepted Construction Phase. A Staged Design Submittal is a submittal that consists of a portion or portions of the Work within the limits of an accepted Construction Phase. For example, a Staged Design submittal for a bridge might be categorized as foundations, substructures, abutments or complete continuous units of superstructure. Staged Design Submittals for other components of the Project might include grading, drainage, signing & pavement marking and erosion control. If the DB Team chooses to provide Staged Design Submittals, the list of Staged Design Submittals shall be identified as part of the proposed Construction Submittals Schedule.

Changes to Accepted and Released for Construction Submittals

After GDOT has accepted the Final Plans and has authorized them as Released for Construction then the DB Team shall submit to GDOT a request for any subsequent plan/design changes and include necessary documentation which supports the reasoning behind the change request. GDOT must accept the requested change with written notice prior to its implementation as a plan revision and subsequent construction activity.

Presentation Requirements

The DB Team shall provide all plan submittals in accordance with the *Plan Development Process (PDP)*, *Electronic Data Guidelines (EDG)* and the *Plan Presentation Guide (PPG)* Manuals for GDOT reviews.

The Plans shall be fully dimensioned in English units; all elevations necessary for construction shall be shown similar to the Department's normal practice. All plans are to be prepared on the scales according to GDOT's Plan Presentation Guide (PPG).

Each location shall include details for all civil elements and calculations within proximity of the site so that these locations can be reviewed holistically and connections with communication and electrical networks are clearly understood.

Construction Plans Organization and Sheet Index: Construction plans shall be assembled according to the GDOT Plan Presentation Guide (PPG).

Computations: All design computations and computer printouts shall be neatly recorded on 8 ½" by 11", fully titled, numbered, indexed, dated and signed by the designer/Project manager and checker. The computer files and two copies of the computations fully checked and appropriately bound, shall be submitted to GDOT with the plans. A complete tabulation of the drainage analysis along with the calculations used to determine the size of drainage structures shall be submitted to GDOT.

Submittal Formats: Each design submittal shall, in addition to electronic delivery in .pdf format on the web-based document management system, consist of ten (10) sets of scalable 11"x 17" or 12" x 18", six (6) full size 24" x 36" design drawings and six (6) sets of calculations and a DVD/CD of the submittal including all InRoads, MicroStation V8 format files. For all Final Plan submittals (plans, calculations, specifications, reports, etc.), each document shall be sealed by a qualified Registered Professional Engineer in the State of Georgia. In addition to written design review comments (if any), design drawings may be returned to the DB Team with any remarks indicated. After a design drawing submittal is "Released for Construction", the DB Team shall, in addition to posting the complete electronic files on the web-based document management system, furnish GDOT with one (1) full size 24" x 36" set and ten (10) sets of 11"x 17" or 12" x 18", corrected design drawings as well a DVD/CD containing the design drawings in In-Roads, Micro-station V8 format. After all individual Staged Design Submittals have been accepted for a particular Construction Phased Plan; a final complete set of plans for the Construction Phase will be compiled and provided to GDOT as the Released for Construction set.

Additional Specifications: In addition to the design drawings that include Georgia standards and details, the DB Team shall prepare and furnish to GDOT, specifications for construction work included in the plans which are not covered by the GDOT's *Standard Specifications*, the *Supplemental Specifications and/or the Special Provisions* as required in Volume 3 Manuals (Technical Documents).

Any submittal(s) received by GDOT after 12 PM (noon) shall be considered as being received the following business day.

23.3 Submittals Process

Review of the Design Documents by GDOT may be limited to the basic requirements of the DB Documents, relating to design compliance and material type(s) and may not include detailed review or checking of design of components and related details or the accuracy with which such designs are depicted on the design drawings.

Review and/or acceptance of any Design Documents shall not relieve the DB Team of responsibility under the Contract including the overall correctness of Design Documents including engineering mathematical computations. All Design Documents, including but not limited to plans, specifications, reports, calculations, shop drawings (where public safety is affected) and Permit documents shall be submitted to GDOT. GDOT will be responsible for distributing the submittals to all required parties of the contract.

All Submittals shall include a cover letter describing the submittal, review period and the due date for any GDOT response.

All Submittals shall include the DB Team's QC/QA certification statement (in addition to the design consultant's QC/QA certification statement for all design related submittals). GDOT will reject any submittal if the QC/QA certification statement is not included. Each submittal shall also provide a certification statement that the submittal complies with all terms and conditions of the DB Agreement signed by the Designer of Record.

Required Participants of the Process

GDOT, except as otherwise required in the DB Documents, will be primarily responsible for verifying that the accepted Design Quality Management Process as required in Section 2 has been followed, verifying that the submittal meets all contract requirements, ensuring that all necessary Governmental Approvals have been obtained by the DB Team, and performing any review(s) as provided for in Volume 2, Section 23.2.

DB Team is responsible to provide all required Submittals in compliance with the DB Documents and in compliance of the accepted Submittals Schedule. The DB Team must further provide a certification that the submittal meets the terms of the contract and has been independently reviewed in accordance with the accepted Design Quality Management Plan (see Section 2.3.15) with the each submittal.

Process

- The DB Team shall provide independent review for all submittals in compliance with the accepted Design Quality Management Plan as specified in Section 2.3.15.
- DB Team provides the submittal to GDOT via web based application and required hard copies in accordance with the submittal schedule. Submittals shall be categorized into "Discipline Groups" as follows:
    - Right of Way, Railroad and Utilities (RRU Group)
    - Roadway, Drainage and Maintenance of Traffic (RDMOT Group)
    - Bridge, Structures, Retaining Walls and Aesthetics (BSRA Group)
    - ITS, Traffic (includes signing, pavement marking, signals and lighting) (ITSTT)
    - All types (ALL Group)
    - Other (OTH)

- GDOT logs in the submittal and distributes to the required review participants.
- Review period begins (the following business day for any submittals received after 12p.m.) per the period as prescribed in Volume 2, Section 23.2, except where there is a maximum number of concurrent submittals of a particular type specifically noted in Volume 2, Section 23.2; in such cases and where the maximum is exceeded, the review period will begin when prior submittal reviews are completed so that the maximum number in concurrent review is not exceeded. For the general case where there is not a maximum number of concurrent submittals specifically noted in Volume 2, Section 23.2, an additional seven (7) days will be added to the prescribed review period whenever there are more than five (5) concurrent submittals in review in the subject document's particular Discipline Group. Further, an additional seven (7) days will be added for each additional increment of five (5) concurrent submittals in review in a Discipline Group. For example, if there are between six (6) and ten (10) submittals in concurrent review in a Discipline Group, then an additional seven (7) days are added; and if there are between eleven (11) and fifteen (15) submittals in concurrent review in a Discipline Group, then an additional fourteen (14) days are added, etc. For purposes of calculating the number of submittals, the accepted submittal schedule will generally be used as a guide except that complementary documents, for example bridge plans and bridge calculations, will be considered a single submittal. Documents that fully integrate multiple disciplines in the presentation, for example roadway and drainage plans, together with the respective calculations would be counted as one submittal. For example documents or packages that include multiple bridges or toll gantries, each individual bridge or toll gantry will be counted as a separate submittal.
- Once a review is complete the drawings and or Submittal will be designated by GDOT as either:
    - Accepted
    - Accepted with Comments
    - Rejected

  The terms "Accepted" and "Accepted with Comments" shall mean that the design process may proceed and is not a notice that construction may begin.
- If "Accepted" or "Accepted with Comments", the GDOT Representative will deliver the comments and, if necessary, return the drawings and/or Submittal via web based application and/or hard copy to the DB Team. For final Submittals, after updating the documents to resolve all comments (as applicable) and receiving written notice from GDOT that the drawings and/or Submittal are "Released for Construction" pursuant to Exhibit 1 of the DB Agreement, the DB Team shall stamp the accepted set "Released for Construction" and distribute copies as required within three (3) business days.
- If "Rejected", the GDOT Representative shall deliver the rejected drawings and/or Submittal via web based application and/or hard copy to the DB Team. The DB Team shall address the specific comments and resubmit. The resubmittal become a new Submittal and shall follow the same time period as provided in Volume 2, Section 23.2.

23.4 Shop Drawings and Temporary Works Submittals

23.4.1 General

Shop drawings include all working, shop, and erection drawings, associated trade literature, calculations, schedules, manuals, and similar documents submitted by the DB Team to define some portion of the project work. The type of work includes both permanent and temporary works as appropriate to the project. Permanent works include all the permanent structures and parts thereof required of the completed DB Documents. Temporary works include any temporary construction work necessary for the construction of the permanent works. This includes falsework, formwork, scaffolding, shoring, temporary earthworks, sheeting, cofferdams, special erection equipment, and the like. Falsework includes any temporary construction work used to support the permanent structure until it becomes self-supporting. Falsework includes steel or timber beams, girders, columns, piles and foundations, and any proprietary equipment including modular shoring frames, post shores, and adjustable horizontal shoring. Formwork includes any structure or mold used to retain plastic or fluid concrete in its designated shape until it hardens. Formwork comprises common materials such as wood or metal sheets, battens, soldiers and walers, ties, proprietary forming systems such as stay-in-place metal forms, and proprietary supporting bolts, hangers and brackets. Formwork may be either permanent formwork requiring a shop drawing submittal such as stay-in-place metal or concrete forms, or may be temporary formwork which requires certification by the Specialty Engineer for construction affecting public safety and for major and unusual structures. Scaffolding is an elevated work platform used to support workmen, materials and equipment, but not intended to support the structure. Shoring is a component of falsework such as horizontal, vertical or inclined support members. In this Section, this term is interchangeable with falsework.

Construction affecting public safety is defined as construction that may jeopardize public safety such as structures spanning functioning vehicular roadways, pedestrian walkways, railroads, navigation channels of navigable waterways and walls or other structure foundations located in embankments immediately adjacent to functioning roadways. It does not apply to those areas of the site under the DB Team's control and outside the limits of, or influence of, normal public access.

For the purpose of shop drawing review and processing as described in Section 23.4, the term "Specialty Engineer" will apply to the initiator or producer of shop drawings regardless of whether or not that party is normally the Engineer of Record; and the term "Engineer of Record" will apply to the shop drawing checker and certifier regardless of whether or not that party is normally the Engineer of Record or the Specialty Engineer.

23.4.2 Work Items Requiring Shop Drawings

In general, GDOT requires shop drawings for items of work not fully detailed in the plans which require additional drawings and coordination prior to constructing the item, including but not limited to:

- Bridge components not fully detailed in the plans, i.e. segments, steel girder details, post-tensioning details, handrails, etc.
- Retaining wall systems
- Precast Box Culverts
- Non-standard Drainage structures, attenuators, and other nonstructural items
- Building structures
- Drainage structures, attenuators, and other nonstructural items
- Design and structural details furnished by the DB Team in compliance with the Contract
- Temporary Works affecting public safety

23.4.3 Schedule of Submittals

Shop drawings shall be included on the submittal schedule described in Section 23.1. For each planned shop drawing submittal, define the type and approximate number of drawings or other documents that are included and the planned submittal date, considering the processing requirements herein. Coordinate subsequent submittals with Project Schedule to allow sufficient time for review and re-submittal as necessary.

23.4.4 Style, Numbering, and Material of Submittals

23.4.4.1 Drawings

The DB Team shall submit the shop drawings electronically in .pdf format on the web-based project management program. In addition to the electronic delivery, the DB Team shall furnish four sets of shop drawings to GDOT for review. Consecutively number each sheet in the submittal series, and indicate the total number in the series (i.e., 1 of 12, 2 of 12, . . ., 12 of 12). Include on each sheet the following items as a minimum requirement: Bridge Number(s), drawing title and number, a title block showing the names of the fabricator or producer and the DB Team for which the work is being done, the initials of the person(s) responsible for the drawing, the date on which the drawing was prepared, the location of the item(s) within the project, the DB Team's approval stamp with date and initials, and, when applicable, the signature and seal of the Specialty Engineer. A re-submittal will be requested when any of the required information is not included.

23.4.4.2 Other Documents

In addition to electronic delivery in .pdf format on the web-based project management program, the DB Team shall provide four sets of original documents or clearly legible

photographic or xerographic copies of documents other than drawings, such as trade literature, catalogue information, calculations, and manuals. Clearly label and number each sheet in the submittal to indicate the total number of sheets in the series (i.e., 1 of 12, 2 of 12, . . . 12 of 12). Provide an additional three sets of documentation for items involved with precast pre-stressed components. Provide an additional two sets of documentation for items involving structural steel components. Bind and submit all documents with a table of contents cover sheet. List on the cover sheet the total number of pages and appendices, and include a title referencing the submittal item(s), the name of the firm and person(s) responsible for the preparation of the document, the DB Team's approval stamp with date and initials, and, when applicable, the signature and seal of the Specialty Engineer. Submit appropriately prepared and checked calculations and manuals that clearly outline the design criteria. Include on the internal sheets the initials of the person(s) responsible for preparing and checking the document. Clearly label trade literature and catalogue information on the front cover with the title, date and name of the firm and person(s) responsible for that document.

23.4.5 Submittals and Copies

23.4.5.1 General

Shop drawings are not required for Qualified Products accepted by GDOT and included on the Qualified Product List as specified in Volume 3 Manuals. For non-Qualified Product, the DB Team will submit shop drawings to GDOT after the Engineer of Record has reviewed and accepted for conformance with the DB Documents and compliance to the design intent. Upon completion of GDOT's review, GDOT's red ink review stamp will signify an officially reviewed shop drawing and will state either "Released for Construction" or "Released for Construction as Noted".

23.4.5.2 DB Team-Originated Design

Submit shop drawings and applicable calculations to the Engineer of Record for review. Ensure that each sheet of the shop drawings and the cover sheet of the calculations are signed and sealed by the Specialty Engineer.

23.4.5.3 Temporary Works

For construction affecting public safety, submit to the Engineer of Record shop drawings and the applicable calculations for the design of special erection equipment, false-work, scaffolding, etc. Ensure that each sheet of the shop drawings and the cover sheet of the applicable calculations is signed and sealed by the Specialty Engineer.

23.4.5.4 Formwork and Scaffolding

The DB Team is solely responsible for the safe installation and use of all formwork and scaffolding. GDOT does not require any formwork or scaffolding submittals unless such work would be classified as construction affecting public safety.

23.4.5.5 Other Miscellaneous Design and Structural Details Furnished by the DB Team in Compliance with the Contract

Submit, to the Engineer of Record, shop drawings and the applicable calculations. Ensure that each sheet of the shop drawings and the cover sheet of the applicable calculations is signed and sealed by the Specialty Engineer.

23.4.6 Processing of Shop Drawings

23.4.6.1 DB Team Responsibility for Accuracy and Coordination of Shop Drawings

Coordinate, schedule, and control all submittals, with a regard for the required priority, including those of the various subcontractors, suppliers, and GDOTs, to provide for an orderly and balanced distribution of the work. Coordinate, review, date, stamp, accept and sign all shop drawings prepared by the DB Team, Contractors, or DB Team-Related Entities (subcontractor, fabricator, supplier, etc.) prior to submitting them to GDOT for review. Submittal of the drawings confirms verification of the work requirements, units of measurement, field measurements, construction criteria, sequence of assembly and erection, access and clearances, catalog numbers, and other similar data. Indicate on each series of drawings the specification section and page or drawing number of the Released for Construction plans to which the submission applies. Indicate on the shop drawings all changes from the Released for Construction drawings and itemize all changes in the letter of transmittal. Likewise, whenever a submittal conforms to the Released for Construction plans, clearly state so in the transmittal letter. Schedule the submission of shop drawings to allow a GDOT review period as specified in the DB Documents. The review period commences upon GDOT's receipt of the valid submittal or re-submittal and terminates upon the transmittal of the submittal back to the DB Team. The DB Team is discouraged from transmitting voluminous submittals of shop drawings at one time. For submittals transmitted in this manner, allow for additional review time. Only shop drawings distributed by GDOT with the "red ink" stamps are valid and all work that the DB Team performs in advance of GDOT's release of shop drawings will be at the DB Team's risk.

23.4.6.2 Scope of Review by the Engineer of Record

The Engineer of Record's review of the shop drawings is for conformity to the requirements of the DB Documents and to the intent of the design. The Engineer of Record's review of shop drawings, which includes means, methods, techniques, sequences, and construction procedures, is limited to the effects on the permanent works. The Engineer of Record's review of submittals, which includes means, methods, techniques, sequences, and construction procedures, does not include an in-depth check for the ability to perform the Work in a safe or efficient manner.

23.4.6.3 Special Review by the Engineer of Record of Shop Drawings for Construction Affecting Public Safety

For construction affecting public safety, the Engineer of Record will make an independent design review of all relevant shop drawings and similar documents. The DB Team shall not proceed with construction of the permanent works until receiving the Engineer of Record's approval. Send a copy of the approval letter to GDOT. The review of these shop drawings is for overall structural adequacy of the item to support the imposed loads and does not include a check for economy, efficiency or ease of construction.

23.4.7 Other Requirements for Shop Drawings for Bridges

23.4.7.1 Shop Drawings for Structural Steel and Miscellaneous Metals

Furnish shop drawings for structural steel and miscellaneous metals. Shop drawings shall consist of working, shop, and erection drawings, welding procedures, and other working plans showing details, dimensions, sizes of material, and other information necessary for the complete fabrication and erection of the metal work.

23.4.7.2 Shop Drawings for Concrete Structures

Furnish shop drawings for concrete components that are not cast-in-place and are not otherwise exempted from submittal requirements. Also, furnish shop drawings for all details that are required for the effective prosecution of the concrete work and are not included in the DB Documents such as: special erection equipment, masonry layout diagrams, and diagrams for bending reinforcing steel, in addition to any details required for concrete components for the permanent work.

23.4.7.3 Special Construction Submittals

In addition to any other requirements, within 60 days from the issuance of the notice to proceed, the DB Team shall submit information to GDOT outlining the plan for integration into the overall approach to the project. Where applicable to the project, include, but do not limit this information to:

- The overall construction program for the duration of the DB Agreement. Clearly show the milestone dates. (For example, the need to open a structure by a certain time for traffic operations.)
- The overall construction sequence. The order in which individual structures are to be built, the sequence in which individual spans of girders or cantilevers are erected, and the sequence in which spans are to be made continuous. Erection plans and sequence drawings shall be provided for all bridge construction work to be perfomed on or over railroad ROW as defined in Section 14 of Volume 3.
- The general location of any physical obstacles to construction that might impose restraints or otherwise affect the construction, and an outline of how to deal with

such obstacles while building the structure(s). (For example, obstacles might include road, rail and waterway clearances, temporary diversions, transmission lines, utilities, property, and the DB Team's own temporary works, such as haul roads, cofferdams, plant clearances and the like.)

- The approximate location of any special lifting equipment in relation to the structure, including clearances required for the operation of the equipment. (For example, crane positions, operating radii and the like.)
- The approximate location of any temporary falsework, and the conceptual outline of any special erection equipment. Provide the precise locations and details of attachments, fixing devices, loads, etc. in later detailed submittals.
- An outline of the handling, transportation, and storage of fabricated components, such as girders or concrete segments. Provide the precise details in later detailed submittals.
- Any other information pertinent to the proposed scheme or intended approach.
- Clearly and concisely present the above information on as few drawings as possible in order to provide an overall, integrated summary of the intended approach to the project. GDOT will use these drawings for information, review planning, and to assess the DB Team's approach in relation to the intent of the original design. The delivery to and receipt by GDOT does not constitute any GDOT acceptance or approval of the proposals shown thereon. Include the details of such proposals on subsequent detailed shop drawing submittals. Submit timely revisions and re-submittals for all variations from these overall scheme proposals.

23.4.7.4 Shop Drawings Requiring Railroad Coordination

GDOT acceptance of shop drawings and submittals involving railroad coordination and review does not constitute final acceptance to begin work on these items. Refer to the requirements of Section 14 for coordination and duration of shop drawing reviews for construction work being performed on or over the ROW of the railroad. Direct coordination between the RUU Group and the railroad will be necessary to ensure that all necessary approvals from the railroad are in place prior to beginning of construction activities in these areas.

23.4.8 Modifications on Construction

Where GDOT allows the DB Team to make modifications to the permanent works for the purposes of expediting the DB Team's chosen construction methods, the DB Team shall submit proposals to the Engineer of Record for review and approval prior to modifying the works. Submit proposals for minor modifications under the shop drawing process. Indicate on all drawings the change(s) from the DB Documents and itemize all Change Requests in the letter of transmittal. GDOT will require additional submittals for major modifications. Minor modifications are those items that, in the opinion of GDOT, do not significantly affect the quantity of measured work, or the integrity or maintainability of the structure or its components. (For example, adjusting concrete dimensions, substituting steel plate sizes, changing reinforcing bar size and spacing,

etc., all within the acceptable limits of the design.) Major modifications are any modifications that, in the opinion of GDOT, significantly affect the quantity of measured work, or the integrity or maintainability of the structure or its' components. (For example, substituting alternative beam sizes and spacing's, changing material strength or type, and the like.) Provide signed and sealed revised sheets to GDOT for any required revisions to the Released for Construction plans prior to submitting shop drawings. GDOT's decision on the delineation between a minor and a major modification and the disposition of a proposal is final.

23.5 As-Built Plans

Upon completion of the Construction Work, a complete set of As-Built Plans (Record Drawings), organized by Construction Phase shall be provided to GDOT as a condition to Final Acceptance and in the following formats:

- Two (2) CD-ROMs or DVDs containing:
    - all electronic design files, electronic calculations, etc.
    - full-size 24" x 36" .tiff images of each plan sheet – one sheet per file
    - full-size 24" x 36" .pdf containing the entire plan set
- One (1) hard copy of the design databook, and drainage calculations
- Two (2) full-size 24" x 36" set of bond prints
- Two (2) half-size 11" x 17" or 12" x 18" set of bond prints

These as-built Record Drawings shall not be field sketches or redlines, but shall be CAD generated drawings which compile all field changes, redlines, plan revisions, and all non-conforming work into a single "strike-through" format set of plans. Where appropriate, new drawings may be inserted to depict portions of the as-built work.

<u>For toll projects:</u>

The toll and toll-related ITS elements of the as-built Record Drawings shall be provided as a separate sub-set by Construction Phase and include but are not limited to, toll locations, toll-related ITS locations, communication hub, fiber back bone, ground boxes, and toll / toll-related ITS lateral locations which shall be provided to SRTA at turnover. These toll and toll-related ITS element as-built Record Drawings shall also be provided to the Department as a condition of Final Acceptance. Draft as-built plans shall be provided to the Department and SRTA for each Toll Location and toll-related ITS location as part of the site turnover process. In addition to the deliverables above, the as-built submittals for toll, toll-related ITS and GDOT ITS shall include an Excel spreadsheet with separate columns for latitude, longitude, station, roadway, device type, manufacturer and model number. Furthermore, linear features shall include a latitude and longitude value for the beginning and end points. Latitude and longitude values shall be accurate to two (2) feet and be in degrees, minutes, and seconds format. GPS points for polygon features (e.g. communication hub can be taken from an edge of the feature).

The DB Team shall be responsible for all production and delivery of materials needed for Department review. Both a member of the design team, who is a Professional Engineer, and a member who is a Registered Surveyor, licensed to practice engineering in the State of Georgia shall seal the As-Built plans.

All files are to conform to the criteria for the design platform of choice (CAiCE or InRoads) found in the Department's Electronic Data Guidelines (EDG), most current version, found at:

http://www.dot.ga.gov/doingbusiness/PoliciesManuals/roads/Pages/Committee.aspx

Georgia Department of Transportation
Programmatic Technical Provisions

I-285 Ramps at CR 209/ Riverside Drive Project

P.I. No. 0010925

VOLUME 3 ATTACHMENTS

Programmatic Technical Provision
For
Design Build Agreement

Georgia Department of Transportation
Programmatic Technical Provisions

I-285 Ramps at CR 209/ Riverside Drive Project

P.I. No. 0010925

Attachment 2-1

GDOT Weather Zones

GA Weather Stations and Divisions by National Oceanic and Atmospheric Administration (NOAA) with GDOT Weather Zones

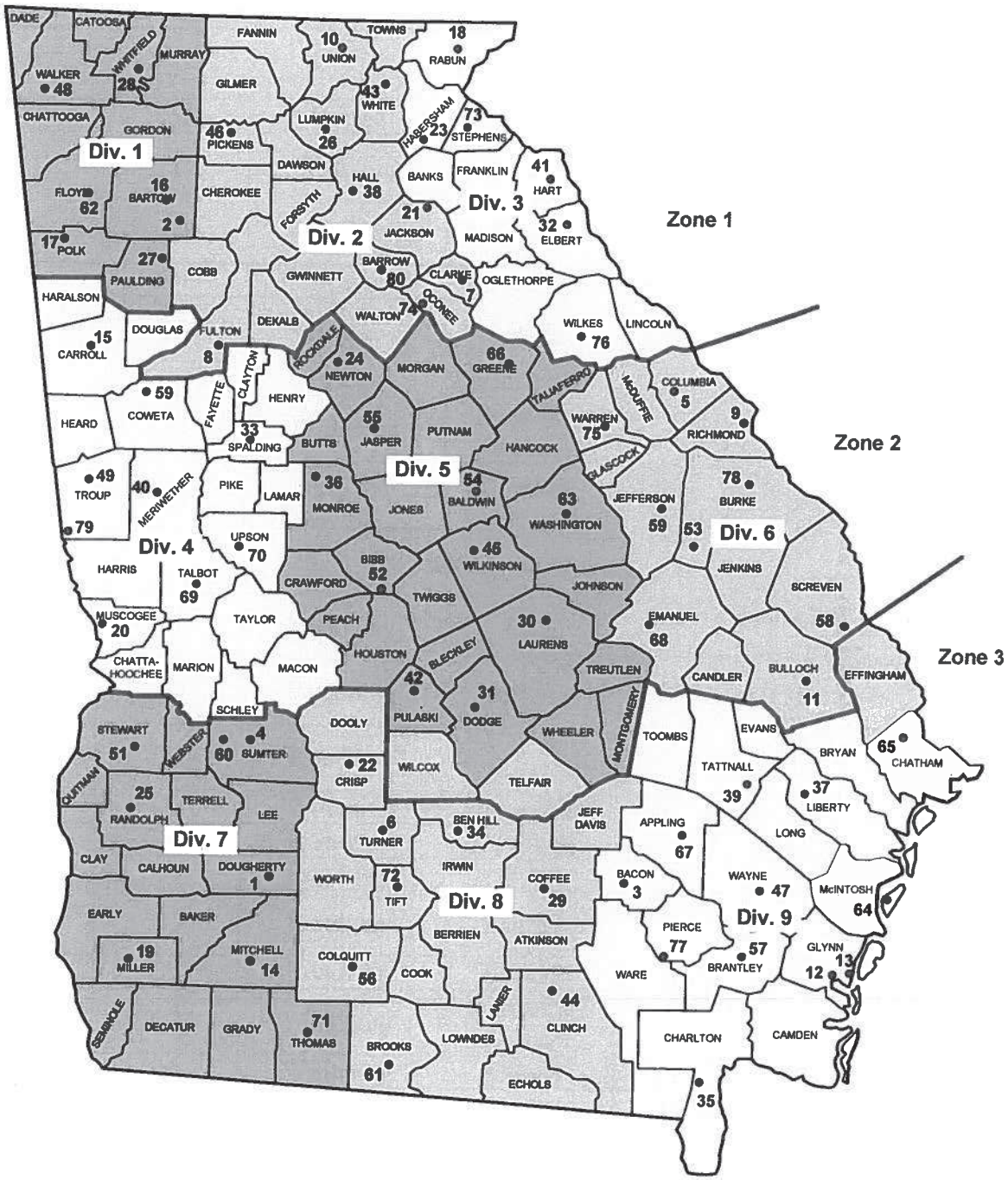

FIGURE 1 GDOT Weather Zones and NOAA Weather Stations and Divisions.

Georgia Department of Transportation
Programmatic Technical Provisions

I-285 Ramps at CR 209/ Riverside Drive Project

P.I. No. 0010925

Attachment 4-1

107.23G Legal Regulations and Responsibility to the Public

March 14, 2014

DEPARTMENT OF TRANSPORTATION
STATE OF GEORGIA

SPECIAL PROVISION

FULTON COUNTY,
P.I. # 0010925
Section 107 – Legal Regulations and Responsibility to the Public

---

Add the following to Subsection 107.23:

G. Protection of Federally Protected Species

The following conditions are intended as a minimum to protect these species and their habitat during any activities that are in close proximity to the known location(s) of these species.

1. The Contractor shall advise all Project personnel employed on this Project about the potential presence and appearance of the federally protected barn swallow (*Hirundo rustica*), cliff swallow (*Petrochelidon pyrrhonota*), and eastern phoebe (*Sayornis phoebe*). All personnel shall be advised that there are civil and criminal penalties for harassing, harming, pursuing, hunting, shooting, wounding, killing, capturing, or collecting these species in knowing violation of the Migratory Bird Treaty Act of 1918. The law protects adults, fledglings, nestlings, eggs, and active nests. Pictures and habitat information are attached and shall be posted in a conspicuous location in the Project field office until such time that Final Acceptance of the Project is made.

2. The rehabilitation of the existing bridge at STA 108+51.79 to 111+12.64, shall take place outside of the breeding and nesting season of phoebes and swallows, which begins April 1 and extends through August 31, unless exclusionary barriers are put in place to prevent birds from nesting. For bridges, exclusionary barriers may be netting made of plastic, canvas or other materials proposed by the Contractor and approved by the Project Engineer prior to installation. Exclusionary barriers must be installed on the bridge <u>prior to</u> March 1 or after August 31, but in no time in between this period. Exclusionary barriers are not a guaranteed method of preventing migratory birds from nesting beneath bridges and work schedules shall take into account the possibility that barriers will not be successful. If exclusionary barriers are to be used, these steps shall be followed:

    a. The Project ecologist shall be notified by phone (404) 631-1100 of the decision to install exclusionary barriers and the date of the proposed installation <u>prior to</u> the installation of any exclusionary devices.

    b. The structure(s) shall be checked for nests prior to the placement of exclusionary barriers. If nests are present, they shall be inspected to ensure that eggs or birds are not present. If the nests are found to be occupied, construction activities associated with the bridge shall be postponed until after August 31 when the breeding season is complete.

    c. For bridge rehabilitation, barriers shall be installed along the full length of the bridge(s). Barriers shall be installed prior to March 1 and left in place until August 31 or until the bridge rehabilitation is complete. If the exclusionary netting fails to prevent nesting (i.e., birds are able to bypass barriers and build nests), construction activities associated with the bridge shall be postponed until after August 31.

d. During construction activities, exclusionary barriers shall be inspected daily for holes or other defects that impair its ability to exclude migratory birds from nesting beneath the bridge. Any holes or defects shall be repaired immediately.

e. Entanglement and/or entrapment of barn swallows, cliff swallows, and eastern phoebes in exclusionary netting constitutes harm to migratory birds. In the event that entanglement and/or entrapment of migratory birds in the netting occurs, the Contractor shall report the incident immediately to the Project Engineer who in turn will notify the State Environmental Administrator, Georgia Department of Transportation, Office of Environmental Services at (404) 631-1101.

3. In the event any incident occurs that causes harm or injury to the barn swallow, cliff swallow, and eastern phoebe along the Project corridor, the Contractor shall report the incident immediately to the Project Engineer who in turn will notify the State Environmental Administrator, Georgia Department of Transportation, Office of Environmental Services at (404) 631-1101. All activity shall cease pending consultation by the Department with the U. S. Fish and Wildlife Service and the lead Federal Agency.

4. The Contractor shall keep a log detailing any incidents that cause harm or injury to barn swallows, cliff swallows, and eastern phoebes in or adjacent to the Project until such time that Final Acceptance of the Project is made. Following Project completion, the log and a report summarizing any incidents that caused harm or injury to these species shall be submitted by the Contractor to the Project Engineer and the State Environmental Administrator, Georgia Department of Transportation, Office of Environmental Services, 600 West Peachtree Street NW, Atlanta, Georgia 30308. GDOT in turn will provide copies of the report to the U.S. Fish and Wildlife Service, the Georgia Department of Natural Resources Wildlife Resources Division, and the lead Federal Agency.

5. All costs pertaining to any requirement contained herein shall be included in the overall bid submitted unless such requirement is designated as a separate Pay Item in the Proposal.

PROTECTED SPECIES ON THE PROJECT

Adult Barn Swallow

Barn Swallow nest under a bridge.

Barn Swallow

Description

- 6 ¾ inches in length
- Long, deeply forked tail
- Upperside iridescent blue, underparts either cinnamon or white, throat reddish-brown
- Nests in pairs or small colonies

Barn Swallow nest under a bridge.

Immature Barn Swallows in nest.

There are civil and criminal penalties for harming or killing this animal and its nest or eggs.

See Special Provision 107.23 G.

PROTECTED SPECIES ON THE PROJECT

Cliff Swallow in flight.

Cliff Swallows at nests.

Cliff Swallow

Description

- Body length is 5.5 inches; wingspan is 12 inches
- Pale orange rump and forehead; square tail tip
- Dark blue cap and upperparts; dark brown throat
- Often nest under bridges; distinctively shaped mud nests

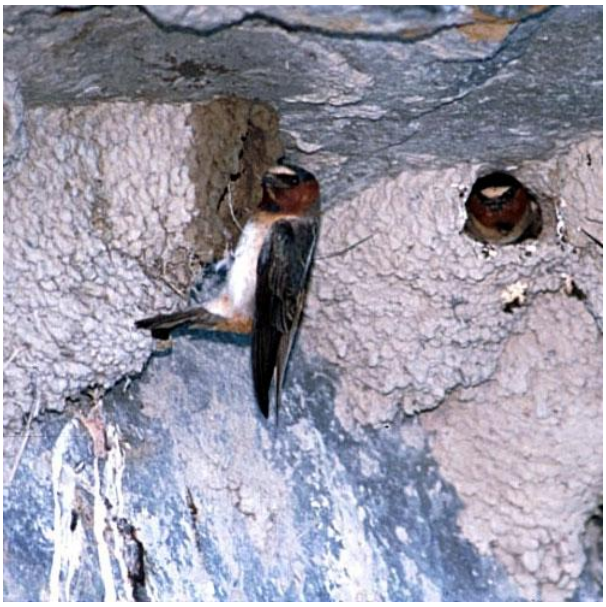

Cliff Swallows at nests.

Cliff Swallows drinking from a puddle.

There are civil and criminal penalties for harming or killing this animal and its nest or eggs.

See Special Provision 107.23 G.

Protected species on the Project

Eastern phoebe *Sayornis phoebe*

Description

- Approximately 6-7 inches in length
- Dark head with grayish-olive upperparts
- Frequently wags tail
- Often builds nest under bridges, in large culverts, or around buildings near water
- Nest is mud and grass lined with moss and hair; contains up to 5 white eggs
- Song is a clear “fee-bee” or “fee-bit-it” often repeated

Adult Eastern phoebe

Eastern phoebe nest under a bridge

There are civil and criminal penalties for harming or killing this animal and its nest or eggs. See Special Provisions 107.23G

Georgia Department of Transportation
Programmatic Technical Provisions

I-285 Ramps at CR 209/ Riverside Drive Project

P.I. No. 0010925

Attachment 6-1

GDOT Right of Way
Locate Request Form

LR1A

GDOT RIGHT OF WAY

LOCATE REQUEST FORM

* Indicates Required Field

Completing and returning this request does not cover utility locates provided by 811 you are responsible to contact them directly.

1	* DATE	* GDOT Manager	* GDOT PI or Permit #
2	* COMPANY NAME	* EMAIL ADDRESS	
3	* NAME	* PHONE NUMBER WITH AREA CODE	
4	* COMPANY ADDRESS	* CITY, STATE, ZIP CODE	
5	* ONSITE CONTACT NAME	* PHONE NUMBER WITH AREA CODE	
6	* Location, (e.g.,I-75)	* ❒ East Bound ❒ North Bound ❒ West Bound ❒ South Bound	* Mile Marker
7	*Acceptable formats: NAD83, WGS84, Decimal Degrees, Degrees Decimal Minutes and Degrees Minutes Decimal Seconds*	LATITUDE	LONGITUDE
8	NEAREST CROSS STREET/ROAD REGARDLESS OF SIZE (indicate street, road, etc.)		
9	ADDITIONAL ADDRESS OR DIRECTIONAL INFORMATION TO JOB SITE *(i.e., directions, landmarks, etc.)*		
10			
11	* It is requested the site be pre-marked in WHITE. Is this complete? ❒ YES		
12	* TYPE OF WORK (*Examples: trench for sewer, cable/telephone drops, static sign installation, plant trees/shrubs, ditch work, etc.)*		
13	* EXTENT OF WORK (Examples: located at damaged guardrail, 3 feet off of road apron, spillway to curb, etc.)		
14			
15	* Requested work date and time of excavation	Dig by date (provided by GDOT)	
16	EXPIRATION DATE OF TICKET (*provided by GDOT)*	Maximo WO Number (provided by GDOT)	
17	Confirmation will be sent via E-Mail when locate is cleared		
18	REMARKS (Notes about excavation site)		
19			
20			
21			
22			
23			

Georgia Department of Transportation Programmatic Technical Provisions

I-285 Ramps at CR 209/ Riverside Drive Project

P.I. No. 0010925

VOLUME 3 MANUALS (Technical Documents)

Volume 3 Manuals (Technical Documents)

All Work shall conform with all applicable Manuals and Guidelines developed for and including AASHTO, FHWA, GDOT, and additional requirements stated in this document and reasonably inferred therefrom. It is the Design-Build Teams responsibility to verify order of the precedence of any State or Federal manual requirement where any potential conflict may exist. The Design-Build Team shall coordinate with the appropriate State and/or Federal agency to confirm the policy and regulations to avoid any conflict of the following manuals prior to design and/or construction. Following is a list of manuals and guidelines that shall be used, in the performance of Work provided that the Work shall not be governed solely by such manuals and guidelines listed herein, and provided further that it is the Design-Build Team's responsibility to locate and utilize the most current edition at the time of the RFP advertisement, including updates, of all such referenced materials for the Work required.

1. AASHTO – A Policy on Geometric Design of Highways and Streets
   https://bookstore.transportation.org/item_details.aspx?ID=110
2. AASHTO – Guide for High-Occupancy Vehicle Facilities
   https://bookstore.transportation.org/Item_details.aspx?id=114
3. AASHTO – Standard Specification for Structural Supports for Highway Signs, Luminaires and Traffic Signals (LTS-5)
   https://bookstore.transportation.org/item_details.aspx?ID=1319
4. AASHTO – Roadside Design Guide
   https://bookstore.transportation.org/item_details.aspx?ID=1802
5. AASHTO – Roadway Lighting Design Guide
   https://bookstore.transportation.org/item_details.aspx?ID=320
6. AASHTO – LFD Standard Specifications for Highway Bridges, 17th Edition
   https://bookstore.transportation.org/Item_details.aspx?id=51
7. AASHTO –Manual for Bridge Evaluation, 2nd Edition, with 2011 Interim Revisions
   https://bookstore.transportation.org/item_details.aspx?ID=1809
8. AASHTO – Guide Specification for Structural Design Sound Barrier
   https://bookstore.transportation.org/item_details.aspx?ID=1155
9. AASHTO – AWS D1.1/ANSI Structural Welding Code – Steel
   http://www.techstreet.com/cgi-bin/detail?doc_no=AWS%7CD1_1_D1_1M_2008&product_id=1519645
10. AASHTO – D1.5/AWS D1.5 Bridge Welding Code
    https://bookstore.transportation.org/item_details.aspx?ID=1756
11. AASHTO – Highway Capacity Manual
    http://www.techstreet.com/cgi-bin/detail?product_id=957255
12. Federal Highway Administration (FHWA) Roadway Construction Noise Model (RCNM) and Guideline Handbook
    http://www.fhwa.dot.gov/environment/noise/construction_noise/rcnm/index.cfm

13. AISC Manual of Steel Construction, referred to as "AISC Specifications"
http://www.aisc.org/store/p-1578-steel-construction-manual-thirteenth-edition.aspx
14. American National Standards Institute (ANSI)/ Illuminating Engineering Society of North America (IESNA) RP-8-00 Recommended Practice for Roadway Lighting
http://webstore.ansi.org/RecordDetail.aspx?sku=ANSI%2FIESNA+RP-8-00
15. America Disabilities Act Accessibility Guidelines (ADAAG)
http://www.ada.gov/stdspdf.htm
16. Manual of Uniform Traffic Control Devices (MUTCD)
http://mutcd.fhwa.dot.gov/
17. GDOT – Signing and Marking Design Guidelines
http://www.dot.ga.gov/doingbusiness/PoliciesManuals/roads/Pages/DesignPolicies.aspx
18. GDOT – Utility Accommodation Policy and Standards Manual
http://www.dot.ga.gov/doingbusiness/utilities/Pages/manual.aspx
19. GDOT - Geotechnical Engineering Manual and Guidelines
http://www.dot.ga.gov/doingbusiness/Materials/Pages/default.aspx
20. GDOT – STI (Sampling, Testing and Inspection) Quick Guide and Documents
http://www.dot.ga.gov/doingbusiness/TheSource/Pages/sti.aspx
21. GDOT – Qualified Products List (QPL)
http://www.dot.ga.gov/doingbusiness/Materials/Pages/default.aspx
22. GDOT – Pavement Design Manual
http://www.dot.ga.gov/doingbusiness/PoliciesManuals/roads/Pages/DesignPolicies.aspx
23. GDOT – Manual on Drainage Design for Highways
http://www.dot.ga.gov/doingbusiness/PoliciesManuals/roads/Pages/DesignPolicies.aspx
24. GDOT – Automated Survey Manual
http://www.dot.ga.gov/doingbusiness/PoliciesManuals/roads/Pages/DesignPolicies.aspx
25. GDOT – Regulations for Driveway and Encroachment Control
http://www.dot.ga.gov/doingbusiness/PoliciesManuals/roads/Pages/DesignPolicies.aspx
26. GDOT – Electronic Data Guidelines
http://www.dot.ga.gov/doingbusiness/PoliciesManuals/roads/Pages/Committee.aspx
27. GDOT – Plan Development Process
http://www.dot.ga.gov/doingbusiness/PoliciesManuals/roads/Pages/default.aspx
28. GDOT – Plan Presentation Guide
http://www.dot.ga.gov/doingbusiness/PoliciesManuals/roads/Pages/default.aspx
29. GDOT – Preliminary Field Plan Review Checklist
http://www.dot.ga.gov/doingbusiness/PoliciesManuals/roads/Pages/OtherResources.aspx
30. GDOT – Final Field Plan Review Checklist
http://www.dot.ga.gov/doingbusiness/PoliciesManuals/roads/Pages/OtherResources.aspx

31. GOT – Design Policy Manual
http://www.dot.ga.gov/doingbusiness/PoliciesManuals/roads/designpolicies/Pages/default.aspx

32. GDOT ITS Design Manual
http://www.dot.ga.gov/doingbusiness/PoliciesManuals/roads/Pages/DesignPolicies.aspx

33. GDOT – NPDES General Permit Guidance
http://www.dot.ga.gov/doingbusiness/PoliciesManuals/roads/Pages/DesignPolicies.aspx

34. GDOT – Bridge and Structures Design Policy Manual
http://www.dot.ga.gov/doingbusiness/PoliciesManuals/roads/Pages/DesignPolicies.aspx

35. GDOT – Environmental Procedures Manual
http://www.dot.ga.gov/doingbusiness/PoliciesManuals/roads/Pages/EnvironmentalProceduresManual.aspx

36. GDOT – Standard Specifications, Construction of Transportation Systems
http://www.dot.ga.gov/doingbusiness/TheSource/Pages/specifications.aspx

37. GDOT – Special Provisions; Shelf Special Provisions, Reference Special Provisions, Supplemental Specifications

http://www.dot.ga.gov/doingbusiness/TheSource/Pages/special_provisions.aspx

http://www.dot.ga.gov/doingbusiness/TheSource/Pages/specifications.aspx

38. GDOT – Construction Standards and Details
http://www.dot.ga.gov/doingbusiness/PoliciesManuals/roads/Pages/default.aspx

39. GDOT – ROW Acquisition Guide
http://www.dot.ga.gov/localgovernment/Documents/AcquisitionGuide_2008_10-23-08.pdf

40. GDOT - Statewide MS4 Permit
http://epd.georgia.gov/sites/epd.georgia.gov/files/related_files/site_page/Final_DOT_SW_NPDES_Permit_MS4_Dec_2011.pdf

41. GDOT - Design of Post-Construction BMPs
https://www.dot.ga.gov/doingbusiness/PoliciesManuals/roads/NPDES/GDOT%20Guidelines%20for%20Design%20of%20Post-Construction%20BMPs.pdf

42. Georgia Soil and Water Conservation Commission - Manual for Erosion and Sediment Control in Georgia
http://gaswcc.georgia.gov/manuals

43. Georgia State Stormwater Assessment Program
http://www.dot.ga.gov/doingbusiness/utilities/Documents/SSAPScopeOfServices.pdf

44. Bridge Inspection Evaluation Maintenance Manual
https://bookstore.transportation.org/item_details.aspx?ID=1617

45. FHWA Traffic Detector Handbook
http://www.fhwa.dot.gov/tfhrc/safety/pubs/Ip90002/intro.htm

46. FHWA Mitigation Strategies for Design Exceptions
http://safety.fhwa.dot.gov/geometric/pubs/mitigationstrategies/fhwa_sa_07011.pdf

47. FHWA Traffic Monitoring Guide
http://www.fhwa.dot.gov/ohim/tmguide/index.htm

48. Occupational Safety and Health Administration Standards (OSHA)
http://www.osha.gov/pls/oshaweb/owasrch.search_form?p_doc_type=STANDARDS&p_toc_level=1&p_keyvalue=Construction
49. National Electrical Safety Code ANSI C2 (NESC)
http://standards.ieee.org/nesc/nesc_preprint.html
50. U. S. Environmental Protection Agency Regulations
http://www.epa.gov/lawsregs/
51. GDOT Public Information Policy Manual
52. American Railway Engineering and Maintenance-of-Way Association (AREMA)
http://www.arema.org/index.aspx
53. GDOT Work Zone Safety and Mobility Policy
http://www.dot.ga.gov/doingbusiness/PoliciesManuals/pap/Documents/Policies/5240-1.pdf
54. GDOT –Quality Control and Quality Assurance Manual
http://www.dot.ga.gov/doingbusiness/PoliciesManuals/roads/OtherResources/GDOT_QCQA_Program.pdf
55. Federal Railroad Administration Regulations
http://www.fra.dot.gov
56. MUTCD-Standards Highway Signs and Markings
http://mutcd.fhwa.dot.gov/ser-shs_millennium.htm
57. Georgia Stormwater Management Manual
http://www.georgiastormwater.com/
58. GDOT ITS Strategic Deployment Plan (Posted on SharePoint)
59. ITE/AASHTO Traffic Management Data Dictionary (TMDD), Standards for Traffic Management Center to Center Communications Version 2.1
60. AASHTO – A Policy on Design Standards Interstate System
https://bookstore.transportation.org/item_details.aspx?ID=1175
61. Etowah Aquatic Habitat Conservation Plan Runoff Limits Manual
http://www.etowahhcp.org/runoff/runoff_limits_manual_draft_2009_09_15.pdf
62. Georgia Traffic Incident Management Guidelines
http://www.timetaskforce.com/documents/TIM/GeorgiaTIMGuidelines_FINAL_V0003.pdf
63. GDOT Construction Manual and Form Documents.

    http://www.dot.ga.gov/doingbusiness/TheSource/Pages/construction.aspx
64. Other manuals, documents, procedures and standards as referenced in the DB Documents.