DEPARTMENT OF TRANSPORTATION
STATE OF GEORGIA

CONTRACT

DO NOT UNSTAPLE THIS BOOKLET....ENTER ALL REQUIRED INFORMATION
EITHER BY HAND OR BY STAMP.

DATE OF OPENING : November 18, 2011 CALL ORDER : 001

CONTRACT ID : B34161-11-000-0

PCN	PROJECTS AND CONTRACT NO.
0008690.01000	CSMSL-0008-00(690)

COUNTY : CHATHAM

CODE: 2AR060

1. ARCHER WESTERN CONTRACTORS, LTD.

PART 2 OF 2

THE CONTRACTOR SHALL RETURN ALL PARTS OF THE CONTRACT

DEPARTMENT OF TRANSPORTATION
STATE OF GEORGIA
SPECIAL PROVISION

Section 814—Soil Base Materials

Delete 814.2.02 and substitute the following:

814.2.02 Soil-Cement Material

A. Requirements

1. Ensure that the material for soil-cement base will:
   a. Meet the requirements of Subsection 810.2.01 for Classes IA1, IA2, IA3, or IIB1 with the following modifications:

Clay content	5 to 25%
Volume change	18% maximum
Liquid Limit	25% maximum
Plasticity Index	10% maximum
Maximum dry density	95 lb/ft³ (1520 kg/m³) minimum
Sulfates	4000 ppm maximum
pH	4.0 minimum

   b. Be friable and not contain large amounts of heavy or plastic clay lumps, organic material, roots, or other substances that would interfere with how the Portland cement sets, plant production, or the finished surface of the base and meet the requirements of Subsection 301.3.05.A.2, "Pulverization" or Subsection 301.3.05.B.1, "Soil".
   c. Produce a laboratory unconfined compressive strength of at least 450 psi (3.1 MPa). To make the sample, mix in a minimum of 5percent to a maximum of 9 percent Type I Portland cement, moist-cure for 7 days, and test with GDT 65.
2. Analyze the soil-cement design and create a Job Mix Formula for each Project where soil-cement base or subbase is specified. Have the Job Mix Formula approved by the Engineer before starting base or subbase construction.
3. You may use fly ash or slag that meets the requirements of Subsection 831.2.03 as admixtures for poorly reacting soils when the blend of soil and fly ash, or slag, meets the design requirements in this Subsection.
4. Ensure that subgrade material used underneath the soil-cement base meets the sulfate and pH requirements of this subsection (See Subsection 209.3.05.A.7).

B. Fabrication

General Provisions 101 through 150.

C. Acceptance

Test as follows:

Test	Method
Soil gradation	GDT 4
Volume Change	GDT 6
Maximum density	GDT 7 or GDT 67
Soil-Cement Design	GDT 65
pH	GDT 98
Sulfates	ASTM D 516
Liquid Limit	AASHTO T 89
Plastic Limit and Plasticity Index	AASHTO T 90

D. Materials Warranty

General Provisions 101 through 150.

Office of Materials and Research

January 20, 2006
April 1, 2010
November 5, 2010

DEPARTMENT OF TRANSPORTATION
STATE OF GEORGIA

SPECIAL PROVISION

Section 815—Graded Aggregate

Delete Section 815 and substitute the following:

815.1 General Description

This section includes the requirements for material to be used for base, subbase, or shoulder course material, and includes graded aggregate, unconsolidated limerock base, and recycled concrete base.

815.1.01 Related References

A. Standard Specifications

Section 800—Coarse Aggregate

B. Referenced Documents

AASHTO T 11

AASHTO T 27

AASHTO T 193

ASTM C 295

ASTM D 3042

FL DOT Method FM5-515

SOP–1

QPL-2

GDT 63

EPA Method 3050/6010

EPA Method 1311

EPA Polarized Light Microscopy Method

EPA Transmission Electron Microscopy Method

815.2 Materials

815.2.01 Graded Aggregate

A. Requirements

1. Type

   Use graded aggregate base, subbase, or shoulder course material of uniform quality.

   a. Obtain the graded aggregate from an approved source or deposit that will yield a satisfactory mixture meeting all requirements of this Specification.

b. Use material that is crushed or processed as a part of the mining operations, or, mix two grades of material so that when combined in the central mix plant, the mixture meets the specifications.

2. Retained on the No. 10 (2 mm) sieve

   Ensure the material retained on the No. 10 (2 mm) sieve is Class A or B aggregate that meets the requirements of Section 800.

3. Passing the No. 10 (2 mm) sieve

   Ensure material passing the No. 10 (2 mm) sieve is relatively free of detrimental substances, such as soil overburden, decomposed rock, and/or swelling silts.

4. Stabilized Mixtures

   Ensure mixtures to be stabilized react satisfactorily when mixed with Portland cement. The Engineer will specify the percentage of Portland cement to use.

5. Gradation

   Grade the graded aggregate base, subbase, or shoulder material as follows:

Sieve Size	Percent Passing By Weight
Group I Aggregates	
2 in (50 mm)	100
1-1/2 in (37.5 mm)	95-100
3/4 in (19.0 mm)	60-95
No. 10 (2 mm)	25-50 (Note 1, 2 and 3)
No. 60 (250 µm)	10-35
No. 200 (75 µm)	7-15
Group II Aggregates	
2 in (50 mm)	100
1-1/2 in (37.5 mm)	95-100
3/4 in (19 mm)	60-90
No. 10 (2 mm)	25-45 (Note 2 and 4)
No. 60 (250 µm)	5-30
No. 200 (75 µm)	4-11
NOTE 1: Group I aggregates having less than 37% passing the No. 10 (2 mm) sieve, shall have at least 9 percent passing the No. 200 (75 µm) sieve.	
NOTE 2: For graded aggregate stabilized with Portland Cement, 30-50 percent by weight shall pass the No. 10 (2 mm) sieve. All other requirements remain the same.	
NOTE 3: Material passing the No. 10 (2 mm) sieve shall have a sand equivalent of at least 20 for Group I aggregates.	
NOTE 4: Material passing the No. 10 (2 mm) sieve shall have a sand equivalent of at least 28 for Group II aggregates. Sand Equivalent values as low as 20 will be acceptable provided they are attributed exclusively to rock flour and the percent passing the No. 10 (2 mm) sieve does not exceed 40.	

B. Fabrication

General Provisions 101 through 150.

C. Acceptance

Test as follows:

Test	Method
Material that passes a No. 200 (75µm) sieve	AASHTO T 11
Gradation	AASHTO T 27
Sand Equivalent	GDT 63

D. Materials Warranty

General Provisions 101 through 150.

815.2.02 Unconsolidated Limerock Base

A. Requirements

1. Type

   Use limerock base, subbase, or shoulder course material of uniform quality.

   a. To ensure uniform quality, the Department may restrict approved sources to specific mining areas, mining processes at a specific mining site, or both.

   b. Use a limerock base that yields a mixture to meet these Specifications.

   c. Use material that is crushed or processed as a part of the mining operations, or mix two grades of material so that when combined in the central mix plant the mixture meets the specifications.

   d. Use limerock base, subbase, or shoulder material that has the following characteristics:

Limerock bearing ratio	At least 100.
Deleterious substances	Do not allow chert or other extremely hard pieces that will not pass the 2 in (50 mm) sieve. Do not allow clay, sand, organics, or other materials in quantities that may damage bonding, finishing, or strength. All material passing the No. 40 (425 µm) sieve shall be non-plastic.
Carbonate content (magnesium or calcium)	At least 80%.

2. Gradation

   Grade the limerock base so at least 97 percent by weight passes the 3-1/2 in (90 mm) sieve.

   a. Grade the material uniformly to dust. The fine portion passing the No. 10 (2 mm) sieve shall all be dust of fracture.

   b. Crush or break the limerock base, if necessary to meet size requirements before placing the material on the road.

   c. Ensure materials having soundness losses of 20% or less, comply with the following gradation requirements:

Gradation Requirements

Sieve Size	Percent Passing By Weight
2” (50 mm)	100
1-1/2” (37.5 mm)	95-100
3/4” (19 mm)	60-95
No. 10 (2.00 mm)	25-45
No. 60 (250 µm)	10-30
No. 200 (75 µm)	7-20

B. Fabrication

General Provisions 101 through 150.

C. Acceptance

Test as follows:

Test	Method
Material that passes a No. 200 (75µm) sieve	AASHTO T 11
Gradation	AASHTO T 27
Limerock bearing ratio	FL DOT Method FM5-515
Petrographic analysis	ASTM C 295
Total carbonates (insoluble residue)	ASTM D 3042

D. Materials Warranty

General Provisions 101 through 150.

815.2.03 Recycled Concrete Base

A. Requirements

1. Sources

   Use recycled concrete materials from sources approved by the Office of Materials and Research and listed on Qualified Products List 2. The criteria for approval will be as outlined in Standard Operating Procedure No. 1, "Monitoring the Quality of Coarse and Fine Aggregates" except the raw material will be recyclable concrete as specified herein rather than a geological deposit of aggregate.

2. Type

   a. Recycled Concrete Base From Known Sources

      Use recycled concrete derived exclusively from Portland cement concrete pavement or structural concrete as a base, subbase, or shoulder course.

      Contaminants -

      Ensure the recycled concrete is free of foreign material such as wood, steel reinforcement, clay balls, soils, epoxy expansion material, delivery unit washout material, miscellaneous paving materials, and non-construction materials.

   b. Recycled Concrete Base From Unknown Sources

      Use recycled concrete derived from sources of demolition materials that comply with the following requirements as a base, subbase or shoulder course. Due to the condition and type of raw material used to produce this base and the resulting difficulty in producing a consistent product, refer to SOP-1 for environmental requirements and preferred production procedures.

      Ensure the finished product does not exceed the regulatory limit for asbestos of 1% (based on microscopy) and the regulatory limit for lead of 5 ppm. These determinations must be made prior to shipping.

      Ensure the California Bearing Ratio (CBR) of the finished product is not less than 140.

      Contaminants –

      Ensure the recycled concrete is substantially free of foreign materials such as steel reinforcement, wood, clay balls, soils, epoxy expansion material and non-construction materials.

      Note - Substantially free, in the context of this specification, shall mean concentrations of the above mentioned foreign materials individually shall not exceed 0.1percent by weight, nor shall the total concentration of these materials exceed 0.5 percent by weight.

Keep the following ancillary materials within these limits:

Substance	Maximum Percent by Weight
Brick	3
Asphaltic Concrete	7
Weathered Rock	2
Any combination of Brick, Asphaltic Concrete or Weathered Rock	10

3. Gradation

   Ensure the finished product meets the quality and gradation requirements of Subsection 815.2.01for Group II aggregates, except the material finer than a #200 (75µm) sieve shall be 2 – 11%.

B. Fabrication

General Provisions 101 through 150.

C. Acceptance

Test as follows:

Test	Method
Gradation	AASHTO T 27
Material that passes a #200 (75µm) sieve	AASHTO T 11
Sand Equivalent	GDT 63
California Bearing Ratio (CBR)	AASHTO T 193
Petrographic Analysis	ASTM C 295
Total Lead	EPA Method 3050/6010
Toxicity Characteristic Leaching Procedure	EPA Method 1311
Asbestos	EPA Polarized Light Microscopy Method Or EPA Transmission Electron Microscopy Method

D. Materials Warranty

General Provisions 101 through 150.

Office of Materials and Research

First Use Date: August 30, 2007
Revised: November 03, 2008
Revised: March 18, 2009
Revised: April 29, 2010

DEPARTMENT OF TRANSPORTATION
STATE OF GEORGIA

SPECIAL PROVISION

Section 820—Asphalt Cement

Delete Section 820 and substitute the following:

820.1 General Description

This section includes the requirements for asphalt cements prepared from crude petroleum.

820.1.01 Related References

A. Standard Specifications

General Provisions 101 through 150.

B. Referenced Documents

Standard Operating Procedure (SOP 4)

AASHTO R 28

AASHTO T 48

AASHTO T 179

AASHTO T 240

AASHTO T 313

AASHTO T 314

AASHTO T 315

AASHTO T 316

AASHTO TP70 (proposed) / ASTM D7405

820.2 Materials

820.2.01 Asphalt Cement

A. Requirements

1.Type

Use a material homogenous and water-free and will not foam when heated to 347 °F (175 °C).

Ensure that a blend used to produce a specified performance grade meets the following requirements:

- Is uniform and homogeneous without separation
- Uses PG 64-22 or PG 67-22 described below for the base asphalt
- Consists of production materials not being “air-blown or acid modified” to achieve the performance grade

2. Grade

Use the various grades of asphalt cement meeting the requirements shown in the test requirements for Petroleum Asphalt Cements

Add only Styrene-Butadiene-Styrene (SBS) or Styrene-Butadiene (SB) to neat asphalt to produce a binder meeting requirements for PG 76-22.

For non Stone Matrix Asphalt Mixtures (SMA) and porous (PEM or OGFC) mixes, SBR or Crumb rubber modified PG 76-22 is an acceptable alternative to SBS or SB modified asphalt cement at contractor's discretion, provided the SBR or crumb rubber modified asphalt cement meets the tests' requirements of PG 76-22. For SBR modified PG 67-22 to meet PG 76-22, use only SBR currently approved on QPL-65 "Georgia's List of Approved Latex Suppliers". For crumb rubber modified PG 67-22 to meet PG 76-22, use 30 mesh size ambient or cryogenic ground tire rubber at minimum 10% of weight of total asphalt cement content. Percentage of ambient or cryogenic ground tire rubber is neat asphalt source dependent to meet specification requirements for PG76-22. Ensure Trans-Polyoctenamer be added at 4.5% of the weight of the crumb rubber to achieve better particle distribution. The maximum Phase Angle requirement is not applicable to the crumb rubber modified PG 76-22 (see notes f and g).

Test Requirements for Petroleum Asphalt Cements

Test And Method	Test Temperature				Original Binder	Residue Of Binder After:	
	PG 58-22 (Note e)	PG 64-22	PG 67-22	PG 76-22 (Note d)		Rolling Thin Film Oven, AASHTO:T 240	Pressure Aging AASHTO: R 28
Flash Point, Min., AASHTO T 48					446 °F (230 °C)		
Viscosity, Max., AASHTO T 316, (Note a)	275 °F (135 °C)				3Pa-S (3000CP)		
Mass Loss (%), Max., AASHTO T 240, (Note b)						0.5	
Dynamic Shear, G*/sin δ, AASHTO T 315, 10 Rad/Sec	136 °F (58 °C)	147 °F (64 °C)	153 °F (67 °C)	169 °F (76 °C)	≥ 1.0 kPa	≥ 2.2 kPa	
Dissipated Energy, Dynamic Shear, G*sin δ, AASHTO T 315, 10 Rad/Sec	72 °F (22 °C)	77 °F (25 °C)	80 °F (26.5 °C)	88 °F (31 °C)			≤ 5000 kPa
Creep Stiffness, 60 sec., AASHTO T 313, (Note c)	10 ° F (- 12 °C)						S ≤ 300 000 kPa m ≥ 0.300
Direct Tension, 1.0 mm/min., AASHTO T314, Failure Strain	10 ° F (- 12 °C)						Report
Multiple Stress Creep & Recovery (MSCR) test, ASTM D7405, AASHTO TP70 (proposed), $J_{nr\ 3.2}$ kPa, (Note f)(Note g)				64 °C		≤ 1.0	

Notes:

a. The Department may waive this requirement if the supplier warrants the asphalt binder can be adequately pumped and mixed at temperatures meeting all applicable safety standards.
b. Heat loss by AASHTO: T 179 may be accepted in lieu of mass loss by AASHTO: T 240.
c. If the creep stiffness is below 300 000 kPa, the direct tension test is not required. If the creep stiffness is ≥300 000 kPa, report the Direct Tension Failure Strain value. Satisfy the m-value requirement in either case.
d. The maximum Phase Angle measured by DSR shall be ≤ 75 degrees.
e. The maximum Mass Loss shall be ≤ 1%, when used in conjunction with Bituminous Surface Treatment (Section 424).
f. MSCR requirement is applicable to the SBR, Crumb Rubber & TOR combination modified PG PG76-22 asphalt cement. Additionally, they shall meet all PG 76-22 requirements except for phase angle.
g. Percent recovery at 3.2 kPa shall be ≥ 35%.

Thoroughly blend the composite materials at the supply facility prior to being loaded into the transport

vehicle if modification is required. Ensure all blending procedures, formulation, and operations are approved by the Office of Materials and Research.

3. Certification:

   Provide certified test results from an approved, certified laboratory of blends for proposed PG asphalt for each specification characteristic of the asphalt cement proposed for shipment. Provide the certified results to the State Materials and Research Engineer as required in Standard Operating Procedure (SOP 4).

   The State Materials and Research Engineer may interrupt production until test results are known in the event there is reason to suspect a sample will be outside specification limits.

B. Materials Warranty

General Provisions 101 through 150.

DEPARTMENT OF TRANSPORTATION
STATE OF GEORGIA

SPECIAL PROVISION

Section 822 — Emulsified Asphalt

Delete Section 822 and substitute the following:

822.1 General Description

This section includes the requirements for homogenous emulsions of asphalt, water, and emulsifying agents.

822.1.01 Related References

A. Standard Specifications

Section 820–Asphalt Cement

B. Referenced Documents

AASHTO T 50

AASHTO T 59

822.2 Materials

822.2.01 Emulsified Asphalt

A. Requirements

1. Type
   Use materials not containing lumps and not showing separation during handling or storage of up to 30 days.
2. Grade
   Use the various grades of emulsified asphalts meeting or exceeding the requirements in Table 1.

Table 1—Requirements for Emulsified Asphalt

Type	Rapid Setting	Slow Setting			Prime
Grade	RS-2h Min. Max.	SS-1h Min. Max.	SS-1 Min. Max.	NTSS-1HM Min. Max.	EAP-1 Min. Max.
Tests on Emulsion: Viscosity Saybolt Furol at 77 °F (25 °C), (Sec.)		20 100	20 100	20 100	15 100
Viscosity Saybolt Furol at 122 °F (50 °C), (Sec.)	75 400				
(a).Settlement 5 Days, (Percent)	5	5	5	5	5
(b).Storage Stability Test 1 Day, (Percent)	1	1	1	1	1
(c).Demulsibility, 35 ml, 0.02N. $CaCl_2$, (Percent)	60				
(d).Cement Mixing Test, (Percent)		2.0	2.0		

Sieve Test, (Percent)	0.10	0.10	0.10	0.30	0.10
Oil Distillate by Volume (Percent)				1	5 12
Residue by Distillation (Percent AC)	63	57	57	50	50
Tests on Residue from Distillation Test: Penetration 77 °F (25 °C) 100 gm/5 Sec. (dmm)	80 140	40 110	100 200	20	
Ductility at 77 °F (25 °C) 5 cm/min. (cm)	40	40	40		
Solubility in Trichloroethylene, (Percent)	97.5	97.5	97.5	97.5	97.5
Float at 140 °F (60 °C), (Sec.)					20
Softening Point, °C				65	
Original DSR @ 86°C G*/Sinδ, 10 rad/s, kPa				1.0	

(a) The test requirement for settlement may be waived when the emulsified asphalt is used in less than five (5) days; or the Engineer may require that the settlement test be run from the time the sample is received until it is used, if the elapsed time is less than five (5) days, if there is an issue of quality.

(b) The 24-hour (1 day) storage stability test may be used but does not predict that the 5 day settlement test will pass.

(c) Ensure the demulsibility test is made within 30 days from date of shipment.

(d) Ensure the cement mixing test will be applicable only if material is used in Asphalt Slurry Seal.

(e) Anionic emulsified asphalt is not compatible with cationic emulsions (CRS, CMS, CSS, CQS etc.). Ensure all equipment is thouroughly cleaned if cationic emulsion was previously present.

B. Fabrication

General Provisions 101 through 150.

C. Acceptance

Test as follows:

Test	Method
Testing emulsified asphalts	AASHTO T 59
Float test	AASHTO T 50

D. Materials Warranty

General Provisions 101 through 150.

DEPARTMENT OF TRANSPORTATION
STATE OF GEORGIA

SPECIAL PROVISION

Section 824 — Cationic Asphalt Emulsion

Delete Subsection 824.1.01.B and substitute the following:

B. Referenced Documents

AASHTO T 49

AASHTO T 51

AASHTO T 53

AASHTO T 59

AASHTO T 72

AASHTO T 301

AASHTO T 302

ASTM D 5546 - 01

QPL 65

GDT 44

GDT 91

GDT 135

Add the following:

824.2.02 Latex-Modified Cationic Asphalt Emulsion

A. Requirements

1. Latex Rubber Additive (LRA)
   a. Ensure the LRA is a natural latex or an unvulcanized styrene-butadine rubber in an emulsified latex form.
   b. Ensure that the LRA comes from an approved source listed in the Department's current QPL 65 for use in cationic asphalt emulsion.
2. Latex-Modified Cationic Asphalt Emulsion
   a. Use PG58-22 as the base asphalt.
   b. Add the LRA in the necessary proportions to result in a minimum of 3% polymer by weight of the asphalt residue.
   c. Co-mill the LRA and asphalt cement while manufacturing the emulsified asphalt to produce a homogeneous mixture.
   d. Ensure the latex-modified cationic asphalt emulsion, when undisturbed for 24 hours, shows no separation of emulsion and LRA and no color striations, but has a uniform color throughout.
   e. Use a latex-modified cationic asphalt emulsion that meets the requirements in Table 2.

Table 2 – Requirements for Latex-Modified Cationic Asphalt Emulsion

Type	Rapid Setting	
Tests	**CRS-2L**	
Tests on Emulsion	**Min**	**Max**
Viscosity, Saybolt Furol @ 122 °F (50 °C), sec.	100	400
Storage stability, 24 hours, percent		1
Settlement, 5 days, percent		5
Demulsibility, 35 ml, 0.8% dioctyl sodium sulfosuccinate, percent	40	
Particle charge test	Positive	
Sieve test, percent		0.10
Residue by distillation, percent [1]	65	
Tests on Emulsion Residue	**Min**	**Max**
Penetration @ 77 °F (25 °C), 100g, 5 sec., (dmm)	70	150
Ductility, @ 77 °F (25 °C), 5 cm/min., (cm)	100	
Elastic recovery @ 50°F (10 °C), percent [2]	55	
Ring & ball softening point, °F	125	
Solubility in toluene by centrifuge, percent	97.5	
Polymer solids content, percent	3.0	

1. AASHTO T-59 modified to include a maximum temperature of 400°F ± 10°F (204°C ± 5°C) to be held for a period of 15 minutes.
2. GDT-135, Residue by evaporation.

B. Fabrication

General Provisions 101 through 150.

C. Acceptance

Test as follows:

Test	Method
Penetration of bituminous materials	AASHTO T 49
Ductility	AASHTO T 51
Softening point of bitumen	AASHTO T 53
Testing emulsified asphalts	AASHTO T 59
Viscosity	AASHTO T 72
Elastic recovery	AASHTO T 301
Polymer content of polymer-modified emulsions	AASHTO T 302
Solubility of asphalt binders in toluene by centrifuge	ASTM D 5546 – 01
Residue by evaporation of latex-modified asphalt emulsions	GDT-135

D. Materials Warranty

General Provisions 101 through 150.

Date: January 15, 2009

DEPARTMENT OF TRANSPORTATION
STATE OF GEORGIA

SUPPLEMENTAL SPECIFICATION

Section 831—Admixtures

Delete Subsection 831.2.01.A and substitute the following:

831.2.01 Air-Entraining Admixtures

A. Requirements

1. Use air-entraining admixtures listed in QPL 13.
2. Use air-entraining admixture materials meeting AASHTO M 154, Performance and Uniformity requirements.
3. Test compression and flexure strengths at 7 and 28 days.
4. Use air-entraining admixtures evaluated by the National Transportation Product Evaluation Program (NTPEP) test facility or other approved test facility.

Delete Subsection 831.2.02.A and substitute the following:

831.2.02 Chemical Admixtures for Concrete

A. Requirements

1. Use chemical admixtures listed in QPL 14.
2. Use chemical admixture materials meeting AASHTO M 194 Physical requirements and Uniformity and Equivalence requirements for Types A, B, C, D, E, F, or G, unless otherwise specified.
   a. Waive the length change requirements.
   b. Ensure that the admixtures contain no more than 0.8 percent chloride, calculated as calcium chloride.
   c. Ensure that the air content does not exceed 4 percent when prepared in a standard batch without an added air-entraining agent.
3. Use chemical admixtures evaluated by the National Transportation Product Evaluation Program (NTPEP) test facility or other approved test facility.

Office of Materials and Research

Date: January 15, 2009

DEPARTMENT OF TRANSPORTATION
STATE OF GEORGIA

SUPPLEMENTAL SPECIFICATION

Section 832—Curing Agents

Delete Subsection 832.2.01.A and substitute the following:

832.2.01 Burlap or Cotton Fabric

A. Requirements

1. Use burlap or cotton fabric meeting these requirements:
   - Burlap that is 10 to 18 oz./yd² (340 to 610 g/m²) or two layers of 6 or 7 oz/yd² (200 or 235 g/m²)
   - Cotton fabric that is white, loosely woven, and not less than 7 oz/yd² (235 g/m²)
   - Strips of burlap or cotton fabric that are between 3 and 6 ft (0.9 and 1.8 m) wide and 3 ft (1 m) longer than the width of the slab to be covered
2. Use burlap and cotton fabrics that do not contain starch or other material that could stain the concrete. If the fabric is new, soak and dry it before use.

Delete Subsection 832.2.03.A and substitute the following:

832.2.03 Membrane Curing Compound

A. Requirements

1. Use membrane curing compounds listed in QPL 16
2. Use liquid membrane-forming compounds meeting AASHTO M 148 requirements.
3. Use membrane curing compounds evaluated by the National Transportation Product Evaluation Program (NTPEP) test facility or other approved test facility.

Office of Materials and Research

DEPARTMENT OF TRANSPORTATION
STATE OF GEORGIA
SUPPLEMENTAL SPECIFICATION

Section 833—Joint Fillers and Sealers

Delete Subsection 833.2.06 and substitute the following:

A. Requirements

1. Silicone

   Furnish silicone sealant in a one-part or two part silicone formulation. Use sealant that is compatible with the surface to which it is applied. Do not use acid-cure sealants on Portland cement concrete.

   a. Use silicone that meets the physical requirements in Table 1. For a list of silicone joint sealant sources, please see QPL 66. Identify silicones as the following types:

      1) Type A—A one part, low modulus, non-sag silicone. Used to seal horizontal and vertical joints in Portland cement concrete pavements and bridges. Tooling is required.

      2) Type B—A one part, very low modulus, self-leveling silicone. Used to seal horizontal joints in Portland cement concrete pavements and bridges. Tooling is not normally required.

      3) Type C—A one part, ultra-low modulus, self-leveling silicone. Used to seal horizontal joints in Portland cement concrete pavements and bridges and joints between Portland cement concrete pavement and asphaltic concrete shoulders. Tooling is not normally required.

      4) Type D—A two part, ultra low modulus, self-leveling, rapid cure silicone. Used to seal horizontal joints in Portland cement concrete pavements and bridges and joints between Portland cement concrete pavement and asphaltic concrete shoulders. Tooling is not required.

   b. Use silicone sealant evaluated by the National Transportation Product Evaluation Program (NTPEP).

   c. Use sealant that is compatible with the surface to which it is applied. Do not use acid-cure sealants on Portland cement concrete.

   d Use silicone that meets the following physical requirements:

Table 1—Physical Requirements for Silicone Sealants

Type Silicone	A	B	C	D
Tensile Stress at 150% Strain, Max. psi (kPa) (Note 1)	45 (310)	40 (275)	15 (105)	25 (175)
Durometer Hardness, Score [0 °F and 77 °F ± 3 °F (-18 °C and 25 °C ± 2 °C)] (Note 1)	"A" 10-25	"00" 40-80	"00" 20-80	"00" 40-80
Bond to Concrete Mortar, Min. psi (kPa) (Note 1) (Note 3)	50 (345)	40 (275)	35 (240)	35 (240)
Tack Free Time (Skin-over) (Max. Minutes) (Note 2)	90	90	90	30
Extrusion Rate (Min. Grams/Minute) (Note 4)	75	90	100	200-550
Non-volatile (Min. %)	90	90	90	90
Specific Gravity	1.1 - 1.5	1.1 - 1.5	1.1 - 1.5	1.2 - 1.5
Shelf Life (from date of shipment)	6 Months	6 Months	6 Months	6 Months
Movement Capability & Adhesion (Note 1)	No adhesive or cohesive failure after 10 cycles at 0 °F (-18 °C).			

Type Silicone	A	B	C	D
Ozone and U.V. Resistance (Note 1)	No chalking, cracking or bond loss after 5,000 hours.			
Note 1: The cure time for these specimens shall be 21 days for Type A and 28 days for Type B, C and D. Specimens shall be cured at 77 °F ± 3 °F (25 °C ± 2 °C) and 50±5% relative humidity.				
Note 2: At conditions of 77 °F ± 3 °F (25 °C ± 2 °C) and 50±5% relative humidity.				
Note 3: Type C and D silicone shall also meet its bond strength requirement to asphalt concrete.				
Note 4: Type D extrusion rate shall be within the range specified.				

2. Bond Breakers

   Bond breakers shall be chemically inert and resistant to oils, gasoline, solvents, and primer, if one is required.

   Install silicone sealants over a bond breaker to prevent the sealant from bonding to the bottom of the joint.

   a. Use bond breakers that are chemically inert and resistant to oils, gasoline, solvents, and primer, if one is required.

   b. Do not use bond breaker that will stain or adhere to the sealant.

   c. Use either a backer rod or tape bond breaker.

      1) Backer Rods

Type L	Closed-cell, expanded polyethylene foam
Type M	Closed-cell, polyolefin foam with a closed-cell skin over an open-cell core

      Use backer rods that meet the following physical requirements:

Physical Property	Requirement
Density	2 lb/ft³ (30 kg/m³)min.
Tensile strength	25 psi (170 kPa) min.
Water absorption	0.02 g/cm³ max.

      2) Bond Breaking Tapes

      Type N bond breaking tapes are made from extruded polyethylene with a pressure-sensitive adhesive on one side.

      Bond breaking tapes may be used with all three types of silicone, but is suitable for bridge joints only.

      Bond breaking tapes shall have a minimum thickness of .005 in (0.13 mm.).

3. Joint Sealant Certification

   Submit, at no cost to the Department, a minimum of 30 gal (100 L) of material and certified test results on each lot of joint sealant furnished to a Project.

   Submit a certification that verifies the sealant meets all the test requirements of this Specification, except the Bond to Concrete Mortar and Shore Durometer Hardness at 0 ºF (-18 ºC).

B. Fabrication

Prepare and install silicone and bond breakers according to Section 461,.

C. Acceptance

1. Silicone

   Test the silicone as follows:

Test	Method
Tensile stress	ASTM D 412 (die C)
Durometer hardness	ASTM D 2240
Bond to concrete mortar	GDT 106

Test	Method
Tack free time (skin-over)	GDT 106*
Extrusion rate	GDT 106
Non-volatile	GDT 106
Specific gravity	ASTM D 792 (Method A)
Movement capability and adhesion	GDT 106
Ozone and UV resistance	ASTM C 793
*In cases of dispute, use ASTM C 679 as a referee test.	

2. Bond Breakers

   Test the bond breaker backer rods as follows:

Test	Method
Density	ASTM D 1622
Tensile strength	ASTM D 1623
Water absorption	ASTM C 1016

3. Department Responsibility

   The Department will:

   a. Evaluate the sealant in the field before accepting any silicone sealants that meet the requirements of this Specification.

   b. Install the material submitted by the Contractor in roadway and/or bridge joints. The material shall be in place for two winters without failure before being accepted.

   c. Reject any sealant or bond breaker that is evaluated and approved, yet fails in actual use.

D. Materials Warranty

General Provisions 101 through 150.

Date: January 7, 2009

DEPARTMENT OF TRANSPORTATION
STATE OF GEORGIA

SUPPLEMENTAL SPECIFICATION

Section 845—Smooth Lined Corrugated Polyethylene (PE) Culvert Pipe

Delete Section 845 and substitute the following:

845.1 General Description

This section includes the requirements for smooth-lined, corrugated polyethylene culvert pipe.

845.1.01 Related References

A. Standard Specifications

General Provisions 101 through 150.

B. Referenced Documents

AASHTO M 294

AASHTO Standard Specifications for Highway Bridges, Division II

QPL 51

845.2 Materials

845.2.01 Smooth-lined, Corrugated Polyethylene (PE) Culvert Pipe

A. Requirements

1. Use pipe meeting the requirements of AASHTO M 294, Type S.
2. Use pipe evaluated by the National Transportation Product Evaluation Program (NTPEP) test facility or other approved test facility.
3. Ensure pipe is produced from an approved source listed on **QPL 51.**
4. Use fittings and couplings as recommended by the manufacturer and approved by the Office of Materials and Research. The fittings and couplings shall comply with the joint performance criteria of AASHTO Standard Specifications for Highway Bridges, Division II. Ensure that the joints are “soiltight” per the AASHTO bridge specifications.

B. Fabrication

General Provisions 101 through 150.

C. Acceptance

General Provisions 101 through 150.

D. Materials Warranty

General Provisions 101 through 150.

Office of Materials and Research

DEPARTMENT OF TRANSPORTATION
STATE OF GEORGIA

Supplemental Specification

Section 853—Reinforcement and Tensioning Steel

Delete Section 853 and Substitute the following:

853.1 General Description

This section includes the requirements for reinforcement and tensioning steel, including:

- Steel bars
- Pretensioning steel wire strand
- Post-tensioning steel wire
- Post-tensioning steel bars
- Plain steel bars with threaded ends
- Steel wire
- Steel welded wire reinforcement
- Dowel bars
- Dowel (tie) bars
- Bar supports
- Epoxy coating

853.1.01 Related References

A. Standard Specifications

Section 514—Epoxy Coated Steel Reinforcement

B. Referenced Documents

AASHTO	ASTM	
M 32/ M 32M	A 153/ A 153 M	A 653/ A653M
M 55/ M 55M	A 416/ A 416M	A 709/ A 709M
M 221/ M 221M	A 421/ A 421M	A 722/ A 722M
M 225/ M 225M		D 1248
M 284/ M 284M		

QPL 12

QPL 55

QPL 61

CRSI Manual of Standard Practices

853.2 Materials

A. Requirements

NOTE: Notify the Office of Materials and Research at least two weeks before blast cleaning the steel reinforcement bars and applying the epoxy coating. This time will allow the Department to schedule an inspection.

B. Fabrication

General Provisions 101 through 150.

C. Acceptance

General Provisions 101 through 150.

853.2.01 Steel Bars for Concrete Reinforcement

A. Requirements

1. Type
   a. Use deformed billet steel bars from rolling mills listed on QPL 61and from fabricators listed on QPL 12
   b. Use deformed billet steel bars that meet the requirements of ASTM A 615/ A 615M for bar reinforcement in concrete, unless otherwise designated.
   c. Use deformed billet steel for longitudinal bars in continuously reinforced concrete pavement that meet the requirements of ASTM A 615/ A 615M, Grade 60 (420).

B. Fabrication

General Provisions 101 through 150.

C. Acceptance

The Department will accept the material based on either QPL approval or on tests conducted by the Department.

The Department will not accept bent bars that have been straightened and rebent.

D. Materials Warranty

General Provisions 101 through 150.

853.2.02 Pretensioning Steel Wire Strand

A. Requirements

1. Type

   Use steel wire that meets all the requirements of ASTM A 416/A 416M. Use Grade 270 for prestressed concrete bridge members.

   a. If you plan to use strands that differ in size from those covered in ASTM A 416/A 416M submit to the Engineer complete data on the proposed strands, as stated below.
2. Certification

   Submit a certification from the manufacturer that shows the results of the required tests, including stress-strain curves, and conformance to these Specifications.

B. Fabrication

General Provisions 101 through 150.

C. Acceptance

The Department will accept the steel based on the results of tests made by the Department and the certification from the manufacturer.

D. Materials Warranty

General Provisions 101 through 150.

853.2.03 Post-tensioning Steel Wire

A. Requirements

1. Type

   Use steel cable for post-tensioning that meets ASTM A 421/ A 421M, Type BA or WA, as specified.

2. Certification

   Submit a certification from the manufacturer that shows the results of the required tests, including stress-strain curves, and conformance to these Specifications.

B. Fabrication

General Provisions 101 through 150.

C. Acceptance

The Department will accept the steel based on the results of tests made by the Department and the certification from the manufacturer.

D. Materials Warranty

General Provisions 101 through 150.

853.2.04 Post-tensioning Steel Bars

A. Requirements

1. Type

   Use high-strength steel bars for post-tensioning that meet the requirements of ASTM A 722/ A 722M, Type II.

2. Drawings

   a. Show all appurtenances to be used with the bars on shop drawings.

   b. Show all dimensions and steel requirements on the drawings.

   c. Use the appropriate ASTM designation for the steel, if possible.

3. Certification

   Submit a certification that shows the results of the required tests, including stress-strain curves, and conformance to this Specification.

B. Fabrication

General Provisions 101 through 150.

C. Acceptance

The Department will accept the steel based on the results of the tests made by the Department and on the certification from the manufacturer.

D. Materials Warranty

General Provisions 101 through 150.

853.2.05 Plain Steel Bars—Threaded Ends

A. Requirements

Use plain steel bars with threaded ends that meet the requirements of ASTM A 709/ A 709M, Grade 36 (250), 50(345), or 70W(485W).

B. Fabrication

General Provisions 101 through 150.

C. Acceptance

The Department will accept the steel based on the certification from the manufacturer.

D. Materials Warranty

General Provisions 101 through 150.

853.2.06 Steel Wire for Concrete Reinforcement

A. Requirements

Use steel wire that meets the requirements of AASHTO M 32/ M 32M and AASHTO M 225/ M 225M and is the size shown on the Plans.

B. Fabrication

General Provisions 101 through 150.

C. Acceptance

The Department will accept the steel based on the results of the tests made by the Department or on the certification from the manufacturer.

D. Materials Warranty

General Provisions 101 through 150.

853.2.07 Steel Welded Wire Reinforcement

A. Requirements

1. Use steel welded wire reinforcement of the size and dimension shown on the Plans and that meets the requirements of AASHTO M 55/ M 55M and AASHTO M 221/ M 221M.
2. Use a vendor listed on QPL 55.

B. Fabrication

General Provisions 101 through 150.

C. Acceptance

The Department will accept the material based on either QPL approval or on tests conducted by the Department.

D. Materials Warranty

General Provisions 101 through 150.

853.2.08 Dowel Bars

A. Requirements

Type: Use dowel bars for concrete pavement that are plain, round steel bars that meet or exceed the tensile requirements of Table 2–Tensile Requirements for Deformed Bars, ASTM A 615/ A 615M, Grade 40 (300).

B. Fabrication

Coat dowel bars with either high density polyethylene or epoxy, as follows:

1. High Density Polyethylene

   Use polyethylene with the following characteristics

Thickness	12 to 20 mils (0.30 to 0.51 mm)
Texture	Smooth and dense enough to provide adequate bond-breaking characteristics
Undercoating (adhesive)	Modified rubber blend; 2 to 7 mils (0.05 to 0.18 mm) thick

   Ensure that the undercoating retains its elasticity and effectively seals small cuts or abrasions from moisture migrating under the polyethylene plastic outer coating.

2. Epoxy

   Prepare the dowels for coating, select the epoxy material, apply the epoxy, and sample and test the properties of coated bars according to the requirements of Section 514.

   a. Apply a uniform, smooth coating to the bars that results in a film 12 mils, ± 2 mils (0.30mm, ± 0.05 mm) thick after curing.

   b. Do not coat the cut ends.

c. Handle the coated dowels carefully to prevent damage to the coating or bar. However, bars can be welded through the epoxy to one side of the supportive basket.

C. Acceptance

The Department will accept the steel based on the results of the tests made by the Department or on the certification of the manufacturer.

The Department will reject dowel bars with burred or deformed ends.

D. Materials Warranty

General Provisions 101 through 150.

853.2.09 Dowel (Tie) Bars

A. Requirements

Use uncoated, plain or deformed billet-steel bars that meet the requirements of ASTM A 615/ M, Grade 40 (300)for dowel bars or tie bars in curbs, concrete medians, and other areas specified on the Plans.

B. Fabrication

General Provisions 101 through 150.

C. Acceptance

The Department will accept the steel based on the results of the tests made by the Department or on the certification of the manufacturer.

D. Materials Warranty

General Provisions 101 through 150.

Office of Materials and Research

DEPARTMENT OF TRANSPORTATION
STATE OF GEORGIA

SUPPLEMENTAL SPECIFICATION

Section 863—Preservative Treatment of Timber Products

Delete Section 863 and Substitute the following:

863.1 General Description

This section includes the requirements for applying preservatives, conditioning, treating, inspecting, marking, testing, and documenting the necessary information for treated timber used in Department Work.

863.1.01 Related References

A. Standard Specifications

General Provisions 101 through 150.

B. Referenced Documents

American Wood Preservers Association (AWPA), C14, "Wood for Highway Construction— Preservative Treatment by Pressure Method"

AWPA C2

AWPA M2

AWPA M3

AWPA P9

AASHTO M 133

QPL 50

863.2 Materials

863.2.01 Conditioning and Preservative Treatment

A. Requirements

1. Condition and preservative treat all timber products to meet the requirements of American Wood Preservers Association (AWPA) Standard C14, "Wood for Highway Construction—Preservative Treatment by Pressure Method," except as described in this Section.
2. Treatment Plants

   Ensure treatment plants comply with quality control procedures in AWPA M3.

   a. To expedite the work, a commercial inspection agency approved by the Department will inspect and test all treated timber products, including any preservative treatment at the treatment plant before it is delivered to the project. The treament plant shall bear all the cost associated with the inspection and test.

   b. Before requesting an inspection, the authorities of the treatment plant shall acquaint themselves with the timber specification requirements and shall segregate the material to be inspected for Department work from other stock.
3. Preservatives

   Use preservatives that meet the requirements in the AWPA Standard, unless otherwise specified in the Plans or the Specifications.

   a. You may select one of three preservatives (creosote, pentachlorophenol, Chromated Copper Arsenate (CCA)) from the Materials and Usage Table in AWPA C14.

b. Ensure pentachlorophenol solutions have at least 5 percent pentachlorophenol, by weight, dissolved in the petroleum solvents specified or pentachlorophenol in AWPA P9, Type "A."

B. Fabrication

1. As practicable, cut, frame, and bore timber before treatment.
2. Condition the timber first. For Southern Pine species, use the following treatment:

Penta-petroleum	Dry in kiln to 30% average moisture content or less or condition in steam
Chromated Copper Arsenate (CCA)	Dry in kiln to 25% average moisture content or less

NOTE: Do not heat the wood in the preservative, and do not use Boulton drying.

3. Preservative Penetration

   Ensure the preservative penetrates at least 3 in (75 mm) or 90 percent of the sapwood for all lumber, timber, wood fence posts, and ties in contact with the ground.

   a. Ensure lumber, timber, and ties that do not contact the ground meet AWPA C2 requirements.

   b. Ensure preservative penetrates all other materials, piles, and poles according to applicable AWPA requirements.
4. Preservative Retention

   Treat guard rail posts and offset blocks with pentachlorophenol or CCA with a minimum 0.6 lb/ft³ (9.6 kg/ m³) retained in the outer 0.6 in (15 mm), as required in AWPA C14 and C2.
5. Retreatment:

   You may retreat a charge of material, or a portion of it, if the initial treatment does not meet requirements for retention, penetration, or appearance. The Department will allow only one retreatment.

NOTE: The Department will reject any damage due to retreatment.

6. Conditioning after Treatment

   a. Condition material that is dust-free.

   b. For lumber or timber that is treated with water-borne preservative and is to be painted, dry by air, kiln, or some method of artificial conditioning, to a moisture content of not more than 19 percent of the weight of the oven-dry wood.

   c. Protect the treated lumber from the elements with a prime coat of paint or other approved means.

   d. Ensure the moisture content does not rise above 19 percent before applying the first coat of paint.

   e. Dry material treated with water-borne preservative that will not be painted to surface dryness in air or otherwise before installing it.

C. Acceptance

1. Inspection

   The Department will sample and test preservatives according to the requirements of AASHTO M 133.

NOTE: Check QPL 50 for pre-approved manufacturers that supply material compliant with this specification.

   a. The Department will determine the level of preservative retention by testing the 0.6 to 1.5 in (15 to 38 mm) assay zone.

   b. Unless otherwise provided, an approved commercial inspection agency will inspect treated timber products according to AWPA M2.

   c. The Inspector will test before, during, and after treating.
2. Marking

   The Inspector will mark each acceptable piece with a hammer stamp before and after treatment.

   a. Stamp only 25 percent of the offset blocks after treatment.

   b. Ensure that both inspection stamps identify the Inspector. Ensure that the before-treatment stamp is clearly distinguished from the after-treatment stamp.

3. Reporting

   The Inspector from an approved commercial inspection agency shall:

   a. Prepare reports of the treating process and results of the inspection that confirm treatment was completed according to these Specifications.
   b. Furnish these reports to the Office of Materials and Research.
   c. Report according to AWPA M2.
   d. Get a shipping report from the treatment plant showing the project number, purchaser, sizes and amounts of materials, and preservative type for each shipment for Department Work.
   e. Furnish the shipment report and the treatment report to the Office of Materials and Research.

D. Materials Warranty

1. Retest treated material that has been in stock for two years before using.
2. The Department will reject any materials that fail to meet specifications unless they are retreated to meet all applicable requirements.

First Use Date: May 19, 2006
Revised: June 5, 2009

DEPARTMENT OF TRANSPORTATION
STATE OF GEORGIA

SPECIAL PROVISION

Section 881—Fabrics

Delete Section 881 and substitute the following:

881.1 General Description

This section includes the requirements for the following fabrics:

- Plain cotton duck
- Rubber-impregnated cotton duck
- Burlap and cotton bags
- Plastic filter fabric
- Pavement reinforcement fabric
- Silt fence filter fabric

881.1.01 Related References

A. Standard Specifications

Section 106—Materials Certification

B. Referenced Documents

Federal Specification CCC-C 419 Type III

ASTM D 36

ASTM D 146

ASTM D 412

ASTM D 1777

ASTM D 3786

ASTM D 4355

ASTM D 4632, GRAB

ASTM D 4751

ASTM D 4833

GDT 87

GDT 88

GDT 95

QPL 28

QPL 36

QPL 40

QPL 47

881.2 Materials

881.2.01 Plain Cotton Duck

A. Requirements

1. Use plain cotton duck meeting the requirements of Federal Specification CCC-C 419 Type III.
2. Ensure the duck weighs at least 8 oz./yd² (270 g/m²).

B. Fabrication

General Provisions 101 through 150.

C. Acceptance

General Provisions 101 through 150.

D. Materials Warranty

General Provisions 101 through 150.

881.2.02 Rubber-Impregnated Cotton Duck

A. Requirements

1. Use preformed rubber-impregnated fabric pads made of multiple layers of 8 oz (270 g) cotton duck, impregnated and bound with high quality natural rubber, or made of equivalent materials compressed into resilient pads of uniform thickness.
2. Use enough plies to reach the specified thickness after compression and vulcanizing.
3. Ensure the finished pad withstands compression loads of not less than 10,000 psi (70 MPa) when applied perpendicular to the plane of the laminations. Ensure the pad does not extrude or harmfully reduce in thickness.

B. Fabrication

General Provisions 101 through 150.

C. Acceptance

General Provisions 101 through 150.

D. Materials Warranty

General Provisions 101 through 150.

881.2.03 Burlap Bags

A. Requirements

Use burlap bags made of at least 95 percent jute and manila fibers.

Use burlap weighing 8 to 18 oz/10 ft² (250 to 550 g/m²).

Use bags with a capacity of 1 to 2 ft³ (0.03 to 0.06 m³).

B. Fabrication

General Provisions 101 through 150.

C. Acceptance

General Provisions 101 through 150.

D. Materials Warranty

General Provisions 101 through 150.

881.2.04 Cotton Bags

A. Requirements

1. Use cotton bags with Osnaburg 40 x 26 thread count and a nominal fabric weight of 6.8 oz/yd^2 (230 g/m^2).
2. Use bags having 1/2 in (13 mm) sewn seams with at least 1 stitch per 1/5 in (5 mm).
3. Use 4 or 5 ply, 12 cotton yarn or equivalent for the stitches.
4. Ensure seam efficiency is at least 80 percent. Ensure the inside measurements tolerance is ± 1/2 in (13 mm).

B. Fabrication

General Provisions 101 through 150.

C. Acceptance

General Provisions 101 through 150.

D. Materials Warranty

General Provisions 101 through 150.

881.2.05 Plastic Filter Fabric

A. Requirements

1. Use pervious sheets of plastic yarn made from a long-chain synthetic polymer. Use polymer composes of at least 85 percent by weight of propylene, ethylene, amide, ester, or vinylidene chloride.

   Use a sheet of plastic yarn containing stabilizers and/or inhibitors added to the base plastic to make the filaments resistant to deterioration due to ultra-violet and/or heat exposure.
2. Ensure the fabric is finished so that the filaments will retain their relative position with respect to each other.
3. Use fabric without defects, rips, holes, or flaws.
4. Use fabric meeting the following physical requirements for woven and non-woven fabric:

Woven Fabrics	
Tensile strength (any direction)	200 lbs (890 N) minimum
Bursting strength	500 psi (3.5 MPa) minimum
Elongation before breaking	10% to 35%
Percent open area	4.0% to 6.5%
Non-woven Fabrics	
Puncture resistance	30 lbs (135 N) minimum
Grab tensile strength	65 lbs (290 N) minimum
Grab elongation	40% minimum
Flow rate [H from 3 to 1 in (75 to 25 mm)]	50 gal/min/ ft² (34 liters/second/m²) (minimum) to 350 gal/ min/ft² (240 liters/second/m²) (maximum)

5. Use fabric evaluated by the National Transportation Product Evaluation Program (NTPEP).

6. Seams
   a. Get approval on the seams from the Engineer before use on a Project.
   b. Use fabric sewn with thread of the same chemical requirements as the fabric, or use fabric bound with cement or heat. Either have the fabric bound or sewn at the point of manufacture or at a location approved by the Engineer.
   c. Seam Uses: You may use one seam in edge drain and underdrain applications.

      You may bond or sew fabric together to form sections at least 6 ft (1.8 m) wide for use under rip rap or behind retaining walls.
7. Fabric Use
   a. Use woven fabrics beneath rip rap when dropping stone from 3 ft (1 m) or less.
   b. You may use woven fabrics that meet the flow rate for edge drains.
   c. Use non-woven fabrics to line edge drains, underdrains, or behind retaining walls, where specified.
   d. Do not use non-woven fabrics for filter beneath rip rap.

B. Fabrication

General Provisions 101 through 150.

C. Acceptance

Test according to the following:

Test	Method
Puncture resistance	ASTM D 4833
Tensile strength, elongation, grab strength	ASTM D 4632
Bursting strength	ASTM D 3786
Percent open area	GDT 88
Flow rate	GDT 87

1. See QPL 28 for acceptable woven and non-woven fabrics meeting the requirements of this Specification. See QPL 47 for acceptable Geocomposite wall drains.
2. The Department will reject any fabrics that meet this Specification but fail to perform in actual use.

D. Materials Care and Warranty

Wrap fabric in burlap or similar heavy duty protection during shipment and storage to protect it from mud, dirt, dust, and debris.

881.2.06 Pavement Reinforcement Fabric

A. Requirements

Type I and Type II Pavement Reinforcement Fabric

1. Use pavement reinforcement fabric that has the following properties:
   - Is non-woven, heat-resistant material composed of polypropylene or polyester fibers
   - Can be saturated with asphalt cement
   - Can be placed smooth with mechanical devices and be without wrinkles
   - Can withstand the heat of asphaltic concrete mixes during paving operations
   - Can withstand normal field handling and construction operations without damage

   For a list of sources, see QPL 40.
   - Meets the following physical requirements. The bid item or Plans will indicate which type of fabric is required for a Project.

	Type I	Type II

Tensile strength, minimum	90 lbs (400 N)	125 lbs (555 N)
Elongation at break	40% min., 100% max.	40% min., 100% max.
Asphalt retention, minimum	0.18 gal/yd² (0.8 L/m²)	0.28 gal/yd² (1.3 L/m²)

2. Submit a certificate from the manufacturer showing the physical properties of the material used and how it meets this Specification. Submit the certificate according to Subsection 106.05, "Materials Certification."
3. Demonstrate to the Department that fabric meeting the physical properties requirements of this Specification has been used successfully in installations with similar environmental and Project conditions.

High Strength Pavement Reinforcement Fabric

1. Use pavement reinforcement fabric with the following properties:
   - Is a flexible, water-resistant, high-density asphaltic membrane laminated between two layers of high strength, heat resistant polypropylene or polyester fabric.
   - Can be placed smooth with mechanical devices and be without wrinkles.
   - Can withstand the heat of asphaltic concrete mixes during paving operations.
   - Can withstand normal field handling and construction operations without damage.
   - Has a self-adhesive backing adhered to a film release liner.

   For a list of sources, see QPL 40.

   - Meets the following physical requirements. The bid item or Plans will indicate which type of fabric is required for a Project.

Width, minimum	18 in (450 mm)
Tensile strength, minimum	1,800 lbs/in^2 (12 MPa)
Elongation	20% to 50%
Softening Point (Asphaltic membrane), minimum	190 ^{0}F (87 ^{0}C)
Caliper	0.135 inch (3.43 mm) 95% retained after loading
Pliability (Cold Flex) 2" (50 mm) X 5" (125 mm) specimen, condition specimen at 0 ^{0}F (-18 ^{0}C)for 1 hour, 180^0 bend on 2" (50 mm) mandrel	No Separation

2. Submit a certificate from the manufacturer showing the physical properties of the material used and how it meets this Specification. Submit the certificate according to Subsection 106.05, "Materials Certification."
3. Demonstrate to the Department that fabric meeting the physical properties requirements of this Specification has been used successfully in installations with similar environmental and Project conditions.

B. Fabrication

General Provisions 101 through 150.

C. Acceptance

Type I and Type II Pavement Reinforcement Fabric

Test according to the following:

Test	Method
Tensile strength	ASTM D 4632 Grab

Elongation	ASTM D 4632 Grab
Asphalt retention	GDT 95

High Strength Pavement Reinforcement Fabric

Test according to the following:

Test	Method
Tensile strength	ASTM D 412
Elongation	ASTM D 412
Softening Point	ASTM D 36
Caliper	ASTM D 1777
Pliability (Cold Flex)	ASTM D 146

D. Materials Warranty

General Provisions 101 through 150.

881.2.07 Silt Fence Filter Fabric

A. Requirements

1. Use approved silt fence from QPL 36.
   a. Type "A" and "B" Fences: Use either woven or nonwoven filter fabric for Type "A" and "B" fences. If using woven fabric, the fabric may have slit tape yarns in one direction (warp or fill) only.
   b. Type "C" Fences: Use non-calendered woven fabric constructed with monofilament yarns only.

NOTE: Approved fabrics must consistently exceed the minimum requirements of this Specification as verified by the Office of Materials and Research. If a fabric is removed from the Qualified Products List, do not use it in the work until the Department has reestablished the product's acceptability.

2. Ensure silt fence filter fabrics have the following characteristics:
   - Has strong rot-proof synthetic fibers formed into either a woven or non-woven fabric
   - Has no treatment or coating that might significantly alter its physical properties after installation
   - Contains stabilizers and/or inhibitors to make the filaments resistant to deterioration resulting from exposure to sunlight or heat
   - Makes a pervious sheet of synthetic fibers oriented into a stable network so that the fibers retain their relative position with respect to each other under normal handling, installation, and service conditions
   - Has finished fabric edges to prevent the outer yarn from pulling away from the fabric
   - Has no defects or flaws that would significantly affect its physical and/or filtering properties
   - Meets the following physical or dimensional requirements:

Type Fence	A	B	C
Minimum tensile strength, pounds (newtons) (1)	Warp – 120 (530) Fill – 100 (445)	Warp – 120 (530) Fill – 100 (445)	Warp– 260 (1155) Fill – 180 (800)
Elongation (% Max.)	40	40	40
Apparent opening size (max. sieve size)	No. 30 (600 um)	No. 30 (600 um)	No. 30 (600 um)
Flow rate, gal/ min./ft² (L/min./m²)	25 (1015)	25 (1015)	70 (2850)

Ultraviolet stability (2)	80	80	80
Bursting strength, psi (kPa)	175 (1200)	175 (1200)	175 (1200)
Minimum fabric width	36 in (914 mm)	22 in (559 mm)	36 in (914 mm)
1. Minimum roll average of five specimens. 2. Percent of required initial minimum tensile strength.			

3. Use silt fence filter fabrics evaluated by the National Transportation Product Evaluation Program (NTPEP).

B. Fabrication

The fabric may be manufactured with pockets for posts, hems with cord, or with posts pre-attached using staples or button head nails.

Ensure the fabric has the manufacturer's name and product trade name labeled on the fabric at a minimum of 25 ft (7.6 m) intervals. Ensure the fabric has a color yarn mark in the fabric 14 inches (355 mm) ± 0.5 inch (12 mm) from both top and bottom ends for Type A and C and 8 inches (203 mm) ± 0.5 inch (12 mm) from both top and bottom ends for Type B fabric.

C. Acceptance

Test according to the following:

Test	Method
Tensile strength	ASTM D 4632
Elongation	ASTM D 4632
Apparent opening size	ASTM D 4751
Flow Rate	GDT 87
Ultraviolet stability	ASTM D 4632 (after 300 hours weathering according to ASTM D 4355)
Bursting strength	ASTM D 3786, Diaphragm Bursting Strength Tester

D. Materials Care and Warranty

Wrap fabric in a heavy-duty protective covering during shipment and storage to protect it from mud, dirt, dust and debris.

Do not expose fabric to temperatures greater than 140 ^{o}F (60 ^{o}C).

881.2.08 Filter Fabric for Embankment Stabilization

See Special Provision.

Office of Materials and Research

DEPARTMENT OF TRANSPORTATION
STATE OF GEORGIA

SPECIAL PROVISION

Section 882—Lime

882.1 General Description

This Section includes the requirements for agricultural lime; lime for subbase and subgrade stabilization; and lime for asphaltic concrete.

882.1.01 Related References

A. Specifications

General Provisions 101 through 150.

Section 163

Section 700

GSP 18

B. Referenced Documents

AASHTO M 303

ASTM C 25

ASTM C 110

ASTM C 977

Liming Materials Act of 1996

882.2 Materials

882.2.01 Agricultural Lime

A. Requirements

Apply agricultural lime use rates made of ground or pelletized dolomitic limestone based on recommendations from a public or private Soil Laboratory that participates in a national proficiency testing program. Proof of testing is the responsibility of the Contractor. Provide a soil test report to the Engineer prior to application. Take soil test samples in accordance with GSP 18 Sampling Testing and Inspection Specifications. Agricultural lime will meet the following requirements:

Requirements	Percent by Weight
Calcium Carbonate Equivalent, min	85
Elemental magnesium derived from magnesium carbonate, min.	6
Passing No. 10 (2.00 mm) sieve, min	90
Passing No. 100 (150 µm) sieve, min	25

B. Fabrication

General Provisions 101 through 150.

C. Acceptance

The Department will accept agricultural lime that meets the above requirements.

D. Materials Warranty

General Provisions 101 through 150.

882.2.02 Lime for Subbase and Sub-Grade Stabilization

A. Requirements

Use either a commercial dry hydrated lime or a commercial granular or pelletized quicklime for soil stabilization.

1. Hydrated Lime: Use hydrated lime that meets the requirements of ASTM C 977, except that at least 85 percent by weight of the lime shall pass the No. 200 (75 µm) sieve.
2. Quicklime: Use quicklime that meets the requirements of ASTM C 977, except that the lime shall contain at least 94 percent total calcium oxide and magnesium oxide (CaO + MgO), and at least 90 percent total available calcium oxide (CaO).
   a. Ensure the quicklime meets one of the following grade requirements (by weight):

Grade A	Grade B
100% passes the 3/8 in (9.5 mm) sieve	100% passes the No. 10 (2.00 mm) sieve
0% passes the 1/4 in (6.3 mm) sieve	

   b. Furnish certified test reports with each shipment of lime attesting that the lime meets the requirements of the Specification. However, the Engineer may inspect, test, and reject the material at any time.
   c. You may use lime from more than one source or more than one type on the same Project, but do not mix the limes.
   d. Protect the lime from exposure until used. Ensure that the lime is dry enough to flow freely when handled.

B. Fabrication

General Provisions 101 through 150.

C. Acceptance

Test the hydrated and quicklime used for subbase and subgrade stabilization according to ASTM C 977.

D. Materials Warranty

General Provisions 101 through 150.

882.2.03 Lime for Asphaltic Concrete

A. Requirements

Use hydrated lime that meets the chemical and physical properties of AASHTO M 303, Type I.

B. Fabrication

General Provisions 101 through 150.

C. Acceptance

1. Run the chemical analysis of hydrated lime used in asphaltic concrete according to ASTM C 25.
2. Test the physical properties of the hydrated lime according to the residue test in ASTM C 110.

NOTE: QPL 41 for lime is used in asphaltic concrete only.

3. See QPL 41 for acceptable hydrated lime that meets the requirements of this Specification.

D. Materials Warranty

General Provisions 101 through 150.

Date: February 1, 2010

DEPARTMENT OF TRANSPORTATION
STATE OF GEORGIA

Supplemental Specification

Section 883—Mineral Filler

Delete Section 883 and substitute the following:

883.1 General Description

This section covers mineral filler used as an ingredient in bituminous paving mixtures. Use mineral filler listed in the approved Asphalt Mix Design and Job Mix Formula and in Qualified Products List (QPL) 81. Use an approved mineral filler that meets the requirements below and consist of finely divided rock dust, slag dust, hydrated lime, hydraulic cement, or fly ash. Other fine, inert, non-toxic materials produced as by-products of industrial processes and meeting the requirements below may be approved as mineral filler based on satisfactory performance in the asphalt mix design procedure. Ensure mineral filler is sufficiently dry, flows freely, and is free from lumps.

883.1.01 Related References

A. Standard Specifications

General Provisions 101 through 150.

B. Referenced Documents

QPL81

AASHTO R 28

AASHTO T 240

AASHTO T 313

AASHTO T 315

GDT-22

GDT 123

883.2 Materials

883.2.01 Mineral Filler

A. Requirements

Use mineral filler meeting the following gradation limits:

Sieve Size	Percent Passing
No. 30 (600 μm)	100
No. 50 (300 μm)	95-100
No. 200 (75 μm)	55-100

Ensure that the mineral filler is free from impurities.

Subject mineral filler for use in Stone Matrix Asphalt (SMA) to mortar property testing according to AASHTO T-240, AASHTO R-28, AASHTO T-313, and AASHTO T-315. Mineral filler may be rejected and removed from QPL-81 for unsatisfactory performance as an ingredient in an asphalt mixture, as determined in these procedures or in the SMA Mix design procedure, GDT-123. Ensure the total fine mortar meets the following requirements:

DEPARTMENT OF TRANSPORTATION
STATE OF GEORGIA

SPECIAL PROVISION

Section 891—Fertilizers

891.1 General Description

This section includes the requirements for fertilizers. Comply and meet the fertilizer requirements of the Georgia Fertilizer Act of 1997 and the Georgia Soil Amendment Act of 1976 which regulates labeling, sampling and tonnage reporting. Purchase all fertilizers through a Georgia registered licensed distributor. All fertilizer is subject to a sampling inspection by the Georgia Department of Agriculture.

891.1.01 Related References

A. Standard Specifications

General Provisions 101 through 150

Section 163

Section 700

Section 702

GSP 18

B. Referenced Documents

Georgia Fertilizer Act of 1997

Georgia Soil Amendment Act of 1976

891.2 Materials

891.2.01 Fertilizer

A. Requirements

1. Use commercial fertilizer as a single nutrient or mixed grade.
2. Apply fertilizer based on recommendations from a public or private Soil Laboratory that participates in a national proficiency testing program. Proof of testing is the responsibility of the Contractor. Provide a soil test report to the Engineer prior to application. Take soil test samples in accordance with GSP 18 Sampling ,Testing and Inspection Specifications.
3. From this recommendation use single nutrient or mixed grade fertilizers containing the nutrients - nitrogen(N), phosphate (P_2O_5), and potash(K_2O) in amounts recommended by the soil test. Composted animal manure may be substituted for commercial fertilizer that meets the soil test recommendations. See web based Fertilizer Calculators to assist in determining the correct analysis and amounts to be applied according to the soil test.
4. Clearly label the analysis on the fertilizer container.
5. Apply fertilizer as a dry or liquid material, using equipment specifically designed for mixing and agitating the fertilizer. Dry or liquid fertilizer may be applied by use of a hydroseeder.
6. Any fertilizer that becomes caked or otherwise damaged, making it unsuitable for use, shall be replaced at the Contractor's expense.
7.

B. Fabrication

General Provisions 101 through 150.

C. Acceptance

The Department will accept fertilizer that meets the above requirements.

D. Materials Warranty

General Provisions 101 through 150.

Test	Specification
Unaged DSR, G*/sinδ(kPa)	5 minimum
RTFO Aged DSR, G*/sinδ(kPa)	11 minimum
PAV Aged BBR, Stiffness (MPa)	1500 maximum

B. Fabrication

General Provisions 101 through 150.

C. Acceptance

Test gradation according to GDT-22.

D. Materials Warranty

General Provisions 101 through 150.

Office of Materials and Research

Revision Date: May 12, 2008
First Use Date: August 22, 2008

DEPARTMENT OF TRANSPORTATION
STATE OF GEORGIA

SPECIAL PROVISION

Section 894—Fencing

Delete Subsection 894.2.0.6.A and substitute the following:

894.2.06 Silt Fabric Fencing

A. Requirements

1. Fabric
   a. See Subsection 881.2.07, "Silt Fence Filter Fabric," for the types of fabric available.
   b. Use a woven wire support fence or a polypropylene support mesh with Type "C" fence.
      1) Woven Wire Support Fence
         a) Ensure the woven wire support fence is at least 26 inches (660 mm) high with at least 6 horizontal wires.
         b) Ensure the vertical wires have a maximum spacing of 12 in (155 mm).
         c) Ensure the top and bottom wires are at least 10 gauge (2.49 mm) and all other wires are at least 12-1/2 gauge (2.03 mm). Use Washburn and Moen Standard requirements for determining wire gauge.
         d) You may use other designs subject to approval by the Office of Materials and Research.
      2) Polypropylene Support Mesh
         a) Ensure the polypropylene support mesh is sewn to the fabric 2 in (50 mm) ± 1 in (25 mm) from top and bottom of fabric and 11 in (279 mm) ± 1 in (25 mm) from top and bottom of fabric. Use a T-90 black polyester thread to sew mesh to fabric with a lock stitch at 5 to 7 stitches per inch.
         b) Ensure the height of the polypropylene support mesh is at least 36 in (914 mm) with a plus tolerance of 1 in (25 mm).
         c) Ensure the polypropylene support mesh minimum tensile strength in the machine direction is 60 lb/3 inches and 72 lb/3 inches in the transverse direction.
         d) Ensure minimum average weight of the polypropylene support mesh is 10.3 lb/1000 ft^2.
         e) Ensure the average strand count of the polypropylene support mesh in the machine direction is 9.0 ± 1.5 per 10 inches and 14.5 ± 0.7 per 10 inches in the transverse direction.
         f) Ensure the polypropylene support mesh contains stabilizers and/or inhibitors that make the mesh resistant to deterioration from exposure to sunlight or heat.
2. Posts

   Use post sizes and types as determined by the type of fence being installed. Generally hardwood posts will be limited to ash, hickory, or oak. Other hardwoods may be acceptable if approved by the Office of Materials and Research.

   a. Type "A" Fence: Use either wood or steel posts that are at least 4 ft (1.2 m) long.
      1) If using soft wood, use posts that are at least 3 in (75 mm) in diameter or nominal 2 x 4 in (33 x 89 mm) and straight enough to provide a fence without noticeable misalignment.

2) If using hardwood, use posts that are 1-1/2 x 1-1/2 in (38 x 38 mm) with a minus tolerance of 3/8 in (9 mm) providing the cross sectional area is at least 2.15 in^2 (1385 mm^2).

3) If using steel, use posts that are "U," "T," or "C" shaped with a minimum weight of 1.15 lb/ft (1.7 kg/m), and have projections for fastening the fence to the posts.

b. Type "B" Fence: Use either wood or steel posts that are at least 3 ft (900 mm) long.

1) If using soft wood, use posts that are at least 2 in (50 mm) in diameter or nominal 2 x 2 in (33 x 33 mm).

2) If using hardwood, use posts that are 1 x 1 in (25 x 25 mm) with a minus tolerance of 1/ 4 in (6 mm) providing the cross sectional area is at least 0.95 in^2 (610 mm^2).

3) If using steel posts, use types "U," "T," or "C" shapes with a minimum weight of 0.75 lb/ft (1.1 kg/m).

c. Type "C" Fence:

1) Woven Wire Supported: Use only steel posts with a minimum length of 4 ft (1.2 m). Use "U," "T," or "C" shaped posts with a minimum weight of 1.15 lb/ft (1.7 kg/m). Use posts that have projections for fastening the woven wire and filter fabric.

2) Polypropylene Mesh Supported: Use either wood or steel posts that are at least 4 ft (1.2 m) long.

a) If using soft wood, use posts that are at least 3 in (75 mm) in diameter or nominal 2 x 4 in (33 x 89 mm) and straight enough to provide a fence without noticeable misalignment.

b) If using hardwood, use posts that are 2 x 2 in (50 x 50 mm) with a minus tolerance of 1/4 in (6 mm) providing the cross sectional area is at least 3.28 in^2 (2120 mm^2).

c) If using steel posts, use "U", "T", or "C" shaped posts with a minimum weight of 1.15 lb/ft (1.7 kg/m). Use posts that have projections for fastening the woven wire and filter fabric.

NOTE: You must use woven wire or polypropylene mesh to provide extra support for Type "C" fence installations.

3. Fasteners for Wooden Posts

a. Wire Staples: Use staples that are at least 17 gauge (1.37 mm), legs at least 1/2 in (13 mm) long, and a crown at least 3/4 in (19 mm) wide.

b. Nails: Use nails that are at least 14 gauge (2.03 mm), 1 in (25 mm) long, with button heads of at least 3/4 in (19 mm).

DEPARTMENT OF TRANSPORTATION
STATE OF GEORGIA

SPECIAL PROVISION

Section 895—Polyacrylamide (PAM)

895.1 General Description

This section covers the use of anionic Polyacrylamide (PAM) as a floculant on construction projects.

895.1.01 Related References

A. Standard Specifications

Section 700—Grassing

B. Referenced Documents

QPL 84

895.2 Materials

A. Requirements

Use only Polyacrylamide (PAM) products listed on the Qualified Products List (QPL 84).

Ensure Polyacrylamide (PAM) emulsions and powders are of the **anionic type only** and meet the following requirements:

1. Meets the EPA and FDA acrylamide monomer limits of equal to or greater than 0.05% acrylamide monomer.
2. Has a density of 10% to 55% by weight and a molecular weight of 16 to 24 Mg/mole.
3. Mixture is non-combustible.
4. Contains only manufacturer recommended additives.

B. Fabrication

General Provisions 101 through 150.

C. Acceptance

1. Polyacrylamide (PAM) products must meet the requirements of Section 895 and be listed on QPL 84.
2. Provide manufacturer's data on charge density and molecular weight.

D. Materials Warranty

General Provisions 101 through 150.

June 16, 2006

DEPARTMENT OF TRANSPORTATION
STATE OF GEORGIA

SUPPLEMENTAL SPECIFICATION

Section 913—Reflectorizing Materials

Delete Section 913 and substitute the following:

913.1 General Description

This section includes the requirements for reflective sheeting.

913.1.01 Definitions

- Reflective Sheeting Types:

Type I:	Medium-intensity retroreflective sheeting (engineering grade) that is typically an enclosed lens glass-bead retroreflective material.
Type II:	Medium-high-intensity retroreflective sheeting (super engineering grade), that is typically enclosed lens glass-bead retroreflective material.
Type III:	High-intensity retroreflective sheeting that is typically an encapsulated glass-bead retroreflective material.
Type IV:	High-intensity retroreflective sheeting that is typically an unmetallized microprismatic retroreflective element material.
Type V:	Super-high-intensity retroreflective sheeting that is typically a metallized microprismatic retroreflective element material. This material is typically used for delineators.
Type VI:	Elastomeric high-intensity retroreflective sheeting without adhesive that is typically a vinyl microprismatic retroreflective material. This material is typically used for orange temporary roll up signs.
Type VII:	Super-high-intensity retroreflective sheeting that is typically an unmetallized microprismatic retroreflective element material.
Type VIII:	Super-high-intensity retroreflective sheeting that is typically an unmetallized microprismatic retroreflective element material.
Type IX:	Very-high-intensity retroreflective sheeting that is typically an unmetallized microprismatic retroreflective element material.
Type X:	Super-high intensity retroreflective sheeting that is typically an unmetallized microprismatic retroreflective element material.

913.1.02 Related References

A. Standard Specifications

General Provisions 101 through 150.

B. Referenced Documents

ASTM D 4956

QPL 29

913.2 Materials

913.2.01 Type I, II, III, IV, V, VI, VII, VIII, IX, and X Reflective Sheeting

A. Requirements

1. Use reflective sheeting that meets the requirements of ASTM D 4956.
2. Use reflective sheeting as listed in QPL 29.
3. Use reflective sheeting that has been evaluated by the National Transportation Product Evaluation Panel (NTPEP) test facility or other approved test facility.
4. Submit the following to the Department:
   a. A certificate with each lot or shipment stating the following:
      - The material supplied will meet all the test requirements listed herein.
      - You have performed the specified tests to ensure compliance.
      - You will submit test results upon request.

B. Fabrication

General Provisions 101 through 150.

C. Acceptance

1. The Engineer will reject reflective sheeting in the following situations:
   a. The material fails to meet any one of the designated requirements.
   b. The material meets the requirements but later fails during sign fabrication or in actual field use. Cracks, wrinkles, delamination, color change, or abnormal loss of reflectivity constitute failure.
   c. Natural causes deteriorate the material to the extent that:
      1) The sign is ineffective for its intended purpose as defined in Subsection 913.2.01.C.1.b above.
      2) The average nighttime reflective brightness does not meet the outdoor weathering requirements of ASTM D4956.

D. Materials Warranty

Transfer to the Department a performance warranty for Type I, II, III, IV, V, VI, VII, VIII, IX, or X reflective sheeting issued by the manufacturer.

Ensure that the warranties cover the full replacement cost, including material and labor.

Include in these warranties a provision that the warranty is subject to a transfer to the Department.

Submit a warranty from the manufacturer that states that the reflective sheeting—processed, applied to sign blank materials, and cleaned—meets the outdoor weathering photometric requirements of ASTM D 4956.

Revision Date: March 28, 2006
First Use Date: June 16, 2006

DEPARTMENT OF TRANSPORTATION
STATE OF GEORGIA

SUPPLEMENTAL SPECIFICATION

Section 917—Reflectors and Nonreflective Characters

Delete Section 917 and substitute the following:

917.1 General Description

This section includes the requirements of demountable characters with Type IX reflective sheeting, and direct-applied, nonreflective characters.

917.1.01 Related References

A. Standard Specifications

Section 106—Certification of Materials

Section 913—Reflectorizing Materials

B. Referenced Documents

ASTM B 209 (B 209M)

ASTM D 822

917.2 Materials

917.2.01 Demountable Characters with Type IX Reflective Sheeting

A. Requirements

1. Use Type IX reflective sheeting letters, numerals, symbols, and borders that meet the requirements of Subsection 913.2.02, Type IX.
2. Use a silver color, unless otherwise specified on the Plans.
3. Apply the characters to aluminum flat frames as recommended by the sheeting manufacturer.
4. Use flat frames (letter, numerals, symbols and borders) made from aluminum sheet 0.032 in (0.813 mm) thick matching ASTM B 209 (209M), Alloy 3003-H14.
5. Submit to the Department:
   - One letter of a predominant size and type to be used on the Project.
   - A certificate to the Engineer stating that the material used on the Project is the same as the sample submitted.

B. Fabrication

1. Before applying any sheeting, properly degrease, etch, and treat each frame with a light, tight amorphous chromate-type coating.
2. Mechanically apply the reflective sheeting to the prepared flat aluminum frames. Use the proper equipment as prescribed by the sheeting manufacturer.
3. When recommended by the sheeting manufacturer, coat the completed demountable letters, numerals, symbols and borders with a clear finish approved by the sheeting manufacturer.

   Apply the clear coat to the sheeting surface to ensure the sheeting has a fully glossy coat and a complete edge seal.

4. Ensure that the finished letters, numerals, symbols, and borders show careful workmanship, are clean cut, sharp, and have a plane surface.
5. Use the character size and shape to determine the hole spacing to mount the frame with aluminum rivets or other approved non-corrosive fasteners. Do not space holes more than 8 in (200 mm) on center.

C. Acceptance

The Department will accept the material based on test results of samples taken by the Department or of samples submitted by the manufacturer or fabricator, when directed. The sample shall consist of one letter of predominant size and type to be used on the Project. Samples submitted by the manufacturer or fabricator to the Engineer, shall include a certificate stating that the material used on the Project is the same as the sample submitted.

D. Materials Warranty

General Provisions 101 through 150.

917.2.02 Direct Applied Nonreflective Characters

A. Requirements

1. Use direct-applied, nonreflective characters as opaque legend, stripping, and symbols on traffic control signs made from reflective sheeting that meets Subsection 913.2.
2. Use nonreflective, weatherproof plastic film that is precoated with pressure-sensitive or heat-sensitive adhesive backing.
3. Use sheeting that is flexible enough to be easily cut, shaped, and applied over reflective sheeting.
4. Submit the manufacturer's certification to the Engineer showing the properties of the materials used and how they match the Specifications, as required by Subsection 106.05, "Materials Certification."
5. Ensure that the nonreflective sheeting is weather resistant after processing and application, according to the manufacturer's recommended procedures.
   a. Expose the nonreflective sheeting for 1,200 hours in an Atlas Twin Arc Weatherometer, as per ASTM D 822.
   b. Clean the sheeting.
   c. The Department will reject nonreflective sheeting that appreciably discolors, cracks, crazes, blisters, changes dimensionally, or adversely effects the reflective sheeting on which it is mounted.
6. Use adhesive that has the following characteristics:
   - Is precoated and pressure-sensitive (Class 1) or tack-free and heat-activated (Class 2). Be able to apply either without adding more adhesive to either the nonreflective sheeting or to the reflective sheeting.
   - Has a protective liner that can be peeled off without being soaked in water or other solvents.
   - Ensure that the liner is easily removed after accelerated storage for 4 hours at 150 °F (65 °C) under 2.5 psi (17 kPa) of pressure.
   - Forms a durable, vandal-resistant bond to smooth and weather resistant surfaces.
   - Adheres securely at temperatures ranging from–30 ° to 200 °F (–35 ° to 95 °C), just 48 hours after application.
   - Prevents the sheeting from shocking off the panel when struck at –10 °F (–25 °C).

B. Fabrication

General Provisions 101 through 150.

C. Acceptance

The Department will accept the material based on the manufacturer's certificate.

D. Materials Warranty

General Provisions 101 through 150.

DEPARTMENT OF TRANSPORTATION
STATE OF GEORGIA

SUPPLEMENTAL SPECIFICATION

Section 919—Raised Pavement Markers

Delete Section 919 and substitute the following:

919.1 General Description

This section includes the requirements for raised pavement marker materials for use in reflective, ceramic, and channel markers.

919.1.01 Related References

A. Standard Specifications

General Provisions 101 through 150.

B. Referenced Documents

ASTM C 424

ASTM C 373

ASTM D 2240

ASTM D 4280

Federal Method TT-T-141, Method 4252

919.2 Materials

A. Requirements

Do not use any marker materials until the laboratory approves it.

1. Use raised pavement marker sources as listed in QPL 76.
2. Use raised pavement markers of the type shown in the Plans or specified in the proposal. This Specification references markers as follows:

Type	Description
1	Two-way, one-color, 4 x 2 in (100 mm x 50 mm), reflective
2	One-way, one-color, 4 x 2 in (100 mm x 50 mm), reflective
3	Two-way, two color, 4 x 2 in (100 mm x 50 mm), reflective
4	Round white, yellow or black ceramic, non reflective
5	Oval white, yellow or black ceramic, non-reflective
6	Oval white or yellow ceramic, reflective
7	White or yellow ceramic jiggle bar, non-reflective
8	White or yellow ceramic jiggle bar, reflective
9	White or yellow channel, non-reflective
10	White or yellow channel, reflective
11	Two-way, one-color, 4 x 4 in (100 mm x 100 mm), reflective

12	One-way, one color, 4 x 4 in (100 mm x 100 mm), reflective
13	Two-way, two color, 4 x 4 in (100 mm x 100 mm), reflective
14	Two-way, one color, flexible reflective
15	One-way, one color, flexible reflective

3. Certification

   Submit a certification to the Engineer from the manufacturer showing the physical properties of the markers and their conformance to this Specification.

4. Packaging

   Pack shipments in containers that are acceptable to common carriers.

   a. Pack the containers to ensure delivery in perfect condition.
   b. Clearly mark each package of pavement markers with the size, color, type, and lot number.
   c. You are liable to replace any damaged shipments.

919.2.01 Raised Retro-Reflective Pavement Markers (Type 1, 2, 3, 11, 12, and 13)

A. Requirements

1. Use raised retro-reflective pavement makers that meets the requirements of ASTM D 4280, designation H.
2. Use raised retro-reflective pavement makers as listed in QPL 76.
3. Use raised retro reflective pavement makers that have been evaluated by the National Transportation Product Evaluation Panel (NTPEP) test facility or other approved test facility.

B. Fabrication

General Provisions 101 through 150

C. Acceptance

The Department will give conditional and final approval to retro reflective pavement markers evaluated by the National Transportation Product Evaluation Program (NTPEP), the Georgia Department of Transportation, or other Department-approved test facilities and place them on QPL 76.

All white and yellow retro reflective pavement markers must meet the requirements of this Specification and the following NTPEP field performance requirement.

a. Conditional QPL Placement: The Department may add markers on a conditional basis to QPL 76. These markers must maintain an average coefficient of luminous intensity for 12 months during the NTPEP evaluation of not less than 25% of the values shown in Table 1 of ASTM D 4280.
b. Final QPL Approval or Rejection: The Department will approve or reject markers based on the marker maintaining an average coefficient of luminous intensity of 0.2 cd/fc for 24 months during the NTPEP evaluation.

919.2.02 Flexible Reflective Markers (Type 14 and 15)

A. Requirements

Use markers manufactured by extruding plastic into an “L” shape, with nominal dimensions of 4 in (100 mm) long x 2 in (50 mm) high (vertical face) x 1 in (25 mm) wide (base leg). Ensure that the markers have the following:

- A pressure-sensitive adhesive with a paper release liner to the bottom of the base leg.
- Strips of metallized acrylic reflective sheeting on either one or both sides of the vertical face.
- A clear plastic cover to protect the reflective strip. Ensure that the cover withstands a chip-seal operation and is easily removed after the operation.

1. Hardness

   a. Select five random markers
   b. Use ASTM D 2240 to determine the Shore A hardness
   c. The Department will reject markers whose body and clear protective cover hardness is less than 80.

B. Fabrication

General Provisions 101 through 150.

919.2.03 Ceramic Pavement Markers (Type 4, 5, 6, 7, and 8)

A. Requirements

1. Use ceramic pavement markers made from a heat-fired, white, vitreous, ceramic base and a heat fired, opaque, glazed surface to produce the properties required in these Specifications.
   a. Do not place glaze on the marker bottom where it connects to the road surface.
   b. Thoroughly and evenly mature the markers. Ensure that they have no defects that affect appearance and serviceability.
   c. Use reflective ceramic markers that meet the specific intensity of each reflective surface according to Table 1 of ASTM D 4280.
   d. Ensure that the mean thickness of the glazed surface is at least 0.005 in (0.13 mm) when measured at least 0.25 in (6 mm) from the edge of the marker.
   e. Ensure that the water absorption of the ceramic markers does not exceed 2 percent of the original dry weight when tested according to ASTM C 373.
   f. Ensure that the glazed surface does not craze, spoil, or peel when passed through one cycle of the Autoclave test at 250 psi (1724 kPa) (ASTM C 424).
2. Use the designated colors for the white and yellow markers.
   a. Ensure that the colors are uniform.
   b. Ensure that black matches Federal Color No. 595-27038.
   c. Determine the color by visually comparing each marker with calibrated standards having CIE Chromaticity Coordinate limits. Determine the limits with Federal methods of test TT-T-141, Method 4252, using a rectangle with the following corner points:

	1		2		3		4		(90MGO)
White	.290	.316	.310	.296	.330	.320	.310	.344	80 min.
Yellow	.435	.485	.445	.435	.544	.456	.516	.484	50 min.

B. Fabrication

General Provisions 101 through 150.

C. Acceptance

1. Use a random sample of five markers for lens impact strength, temperature cycling and compressive strength tests specified in ASTM D 4280.
2. Use the following table to determine if the markers pass the tests.

Markers that Pass	Department Action
5 of 5	Accept the lot.
3 or less of 5	Reject the lot; no resample allowed.
4 of 5	The Contractor may request a retest. The Department will retest an additional 25 random markers in the test or tests where the original sample failed.
20 of 25 retested	Accept the lot.
19 or less of 25 retested	Reject the lot; no resample allowed.

3. Compressive Strength Test
   a. The markers pass if the average compressive load of all five markers is at least 1,500 psi (6.7 kN). No individual marker shall be less than 1,200 psi (5.3 kN).

D. Materials Warranty

General Provisions 101 through 150.

919.2.04 Channel Pavement Markers (Type 9 and 10)

A. Requirements

1. Use channel pavement markers made of either a heat-fired, white, vitreous, ceramic base with a heat-fired, opaque, glazed surface, or a 9 gauge (3.9 mm) steel body with a heat-fired porcelain finish.
   a. Ensure both ceramic and steel channel markers have no defects that affect appearance and serviceability.
   b. Ensure that the mean thickness of the glazed surface of ceramic channel markers is at least 0.005 in (0.13 mm) when measured at least 0.25 in (6 mm) from the edge of the marker.
   c. Ensure that mean thickness of the porcelain finish on the steel channel markers is at least 0.030 in (0.76 mm).
   d. Ensure that the water absorption of the ceramic markers does not exceed 2.0 percent of the original dry weight when tested according to ASTM C 373.
   e. Ensure that the surface of the markers do not craze, spoil, or peel when passed through one cycle of the Autoclave test at 250 psi (1724 kPa) (ASTM C 424).
2. Use the designated colors for the white and yellow markers.
   a. Ensure that the colors are uniform.
   b. Determine the color by visually comparing them with calibrated standards having CIE Chromaticity Coordinate limits. Determine the limits with Federal methods of test TT-T-141, Method 4252, using a rectangle with the following corner points:

	1		2		3		4		(90MGO)
White	.290	.316	.310	.296	.330	.320	.310	.344	80 min.
Yellow	.435	.485	.445	.435	.544	.456	.516	.484	50 min.

B. Fabrication

General Provisions 101 through 150.

C. Acceptance

1. Ensure that Type 10 markers meet the specific intensity of each reflective surface according to Table 1 in ASTM D 4280.
2. Use a random sample of five markers for lens impact strength, temperature cycling and compressive strength tests specified in ASTM D 4280.
3. Select two of the five markers and subject them to all the required tests.
4. Use the following table to determine if the markers pass the tests.

Markers that Pass	Department Action
2 of 2	Accept the lot.
0 of 2	Reject the lot; no resample allowed.
1 of 2	Retest the three remaining markers.
3 of 3 retested 2 or less of 3 retested	Accept the lot. Reject the lot; no resample allowed

D. Materials Warranty

General Provisions 101 through 150.

DEPARTMENT OF TRANSPORTATION
STATE OF GEORGIA

Special Provision

Section 925—Traffic Signal Equipment

Delete Section 925 and substitute the following:

925.1 General Description

This section provides Specifications for a variety of traffic signal equipment. Ramp Meters are defined as a form of traffic signalization and all general provisions for traffic signalization are applicable unless otherwise noted in the Plans and Specifications.

925.1.01 Related References

A. Standard Specifications

Section 500—Concrete Structures
Section 639—Strain Poles for Overhead Sign and Signal Assemblies
Section 647—Traffic Signal Installation
Section 682—Electrical Wire, Cable and Conduit
Section 833—Joint Fillers and Sealers
Section 861—Piling and Round Timber
Section 870—Paints (Field Painting)
Section 915—Mast Arm Assemblies
Section 922—Electrical Wire and Cable
Section 923—Electrical Conduit
Section 926 – Wireless Communication Equipment
Section 927 – Wireless Communication Installation
Section 935—Fiber Optic System
Section 937 – Video Detection System
Section 939—Communications and Electronic Equipment

B. Referenced Documents

- National Electrical Manufacturers Association (NEMA) Standards Publication TS 1 Section 15
- NEMA Standard Publication TS 2- 1998
- Institute of Transportation Engineers (ITE)Vehicle Traffic Control Signal Heads Specification
- ITE Vehicle Traffic Control Signal Heads: Light Emitting Diode (LED)Circular Signal Supplement June 27, 2005 Specification
- ITE Vehicle Traffic Control Signal Heads – Part 3: Light Emitting Diode (LED) Vehicle Arrow Traffic Signal Modules Specification
- ITE Pedestrian Traffic Control Signal indications – Part 2: Light Emitting Diode (LED) Pedestrian Traffic Signal Modules Specification
- International Municipal Signal Association (IMSA) #20-1 Specification
- IMSA #20-4Specification

- IMSA #20-6Specification
- IMSA #50-2Specification
- IMSA #51-1Specification
- Underwriters Laboratory Inc. (UL) 94 Tests for Flammability of Plastic Materials for Parts in Devices and Appliances
- UL 493 Standard for Safety for Thermoplastic-Insulated Underground Feeder and Branch-Circuit Cables
- Traffic Signal Control Equipment Specifications, January 1989 edition and applicable addenda, State of California Business, Transportation & Housing Agency
- State of California Department of Transportation (CALTRANS) Qualified Products List (QPL) Controller Assemblies for the Model 170/2070 Traffic Controller,
- CALTRANS Transportation Electrical Equipment Specifications (TEES) August 16, 2002 and applicable addenda
- Georgia Department of Transportation Qualified Products List 75"Polyurethane Sealant for Inductive Loops"(American Society of Testing and Materials(ASTM) A36 Standard Specification for Carbon Structural Steel
- ASTM A53 Standard Specification for Pipe, Steel, Black and Hot Dipped, Zinc-Coated, Welded and Seamless
- ASTM A123 Standard Specification for Zinc (Hot-Dip Galvanized) Coating on Iron and Steel Products
- ASTM A153 Standard Specification for Zinc Coating (Hot Dip) on Iron and Steel Hardware
- ASTM A325 Standard Specification for Structural Bolts, Steel, Heat Treated, 120/105 ksi Minimum Tensile Strength
- ASTM A475 Standard Specification for Zinc-Coated Steel Wire Strand
- ASTM A572 Standard Specification for High- Strength Low-Alloy Columbium-Vanadium Structural Steel
- ASTM C1028 Standard Test Method for Determining the Static Coefficient of Friction of Ceramic Tile and Other Like Surfaces by the Horizontal Dynamometer Pull-Meter Method
- ASTM D256 Standard Test Methods for Determining the Izod Pendulum Impact Resistance of Plastics
- ASTM D638 Standard Test Methods for Tensile Properties of Plastics
- ASTM D785 Standard Test Method for Rockwell Hardness of Plastics: Electrical Insulating Materials
- ASTM D790 Standard Test Methods for Flexural Properties of Unreinforced and Reinforced Plastics and Electrical Insulating Materials
- ASTM D2444 Standard Test Methods for Determination of the Impact Resistance of Thermoplastic Pipe and Fittings by Means of a Tup
- ASTM D543 Standard Practices for Evaluating the Resistance of Plastics to Chemical Reagants

925.2 Materials

925.2.01 General

A. Requirements

Ensure that the traffic signal equipment and materials meet the Plans and Specifications.

All equipment furnished shall be new and meet the requirements of the following:

- Underwriter's Laboratory Incorporated (UL)
- Electronic Industries Association (EIA)
- National Electric Code (NEC)
- American Society of Testing and Materials (ASTM)
- American National Standards Institute (ANSI)
- International Municipal Signal Association (IMSA)
- National Electrical Manufacturers Association (NEMA)
- Applicable Standards, Specifications, and Regulations of the:

Georgia Department of Transportation
Traffic Signal Electrical Facility & NaviGAtor Support (TSEF)
935 E. Confederate Avenue, Building 5
Atlanta, GA 30316

B. Fabrication

General Provisions 101 through 150.

C. Acceptance

General Provisions 101 through 150.

D. Materials Warranty

- Provide to the District Signal Engineer or maintaining agency all manufacturers' warranties and guarantees for all signal equipment items listed in this document as well as any signal equipment listed in the Plans, except for state supplied equipment.
- Ensure that warranties and guarantees are consistent with those provided as customary trade practices; or as otherwise specified in the Plans, Standard Specifications, Supplemental Specifications or Special Provisions.
- Ensure, and state, that manufacturer's and supplier's warranties and guarantees are transferable to the agency or user that is responsible for traffic signal maintenance. And said warranties and guarantees are continuous throughout their duration.
- Ensure equipment provided under this specification shall be warranted by the manufacturer to be free from defects in materials and workmanship for a minimum period of two years from date of receipt or one year from date of acceptance of installation. The exception is the other materials stated in this specification which have longer warranty durations.
- Ensure the manufacturer will repair any faulty equipment during this period at no charge to the Department for parts, labor or shipping to and from the factory.

925.2.02 Type 2070 Controller Assemblies

A. Requirements

For 2070 controller cabinet assemblies, use 2070 controller units that meet the requirements of the following or are previously approved by TSEF:

- *Traffic Electrical Equipment Specifications (TEES)* published by the State of California Business, Transportation, and Housing Agency; Department of Transportation, current edition and current addenda
- *CALTRANS* Qualified Products List (QPL)
- Ensure the unit supplied is compatible with current GDOT licensed firmware.

The following Specifications augment the CALTRANS Specifications and take precedence over conflicting CALTRANS Specifications.

1. Input/output (I/O) and Configuration:

   The 2070 Controller shall be supplied in one of the following configurations, as specified in the Plans (all modules are specified in TEES, but these configurations supersede the defined configurations in TEES):

   - 2070L: Provide Chassis, 2070-1B Single-Board CPU, 2070-2A Field I/O Module, 2070-3B Front Panel (8x40 display), 2070-4B 3.5-amp Power Supply, and a 2070-7A Module. This unit is intended for interfacing in Type 170E or ITS cabinets and shall provide the default input and output configuration as shown in Tables 925-13, 925-15 and 925-16 for ITS cabinets using a traffic signal application.
   - 2070LC: Provide Chassis, 2070-1B Single-Board CPU, 2070-2B Field I/O Module, 2070-3B Front Panel (8x40 display), 2070-4B 3.5-amp Power Supply, and a 2070-7A Module. This unit is intended for interfacing in ITS cabinets only and shall provide the default input and output configuration as shown in Tables 925 -13, 925-15 and 925-16 for ITS cabinets using a traffic signal application.
   - 2070 LB: Provide Chassis, 2070-1B Single –Board CPU, 2070-2A Field I/O Module, 2070-3C Front Panel, 2070-4B 3.5-amp Power Supply, This unit is intended for interfacing in Type 170E or ITS cabinets where a user interface is not required and shall provide the default input and output configuration as shown in Tables 925 -13, 925-15 and 925-16 for ITS cabinets using a traffic signal application.

- 2070 LN1: Provide Chassis, 2070-1B Single-Board CPU, 2070-2B Field I/O Module, 2070-3B Front Panel (8x40 display), 2070-4NB 3.5-amp Power Supply, 2070-8 NEMA Interface Module, and a 2070-7A Module. This unit is intended for interfacing in NEMA TS 1 or NEMA TS 2 Type 2 cabinets.
- 2070 LN2: Provide Chassis, 2070-1B Single-Board CPU, 2070-2N Field I/O Module, 2070-3B Front Panel (8x40 display), 2070-4NB 3.5-amp Power Supply, and a 2070-7A Module. This unit is intended for interfacing in a NEMA TS 2 Type 1 cabinet.

2. Power Supply Modules:

   Either the 2070-4A, 2070-4B, 2070-4NA or 2070-4NB module shall be provided as required in the configuration requirements in the preceding Item. In addition to all requirements of the TEES, the power supplies shall be clearly marked as a “2070-4A”, “2070-4B”,”2070-4NA”, or “2070-4NB”. The Vendor may supply a 2070-4A or 4NA power supply module in lieu of a 2070-4B or 4NB, as long as it is so marked and adds no additional cost to GDOT.

3. Documentation:

   Include with each controller, manuals that document the programming, operation, and maintenance of the unit. Include schematic drawings and pin assignment charts in the manuals for maintenance. Documentation shall include all components, including communications modules. Specific reference is made to section 1.2.4 Documentation in the CALTRANS TEES concerning required documentation to be provided.

4. Testing:

   Provide for complete testing of unit before it is shipped. If unit is shipped with applications firmware installed, it must be tested with the application (e.g. Traffic Signal Control). If a random sample of greater than 10 percent of the units tested is rejected then the total shipment shall be rejected and vendor will be responsible for all costs to test and repair all units provided.

B. Fabrication

General Provisions 101 through 150.

C. Acceptance

See Subsection 925.2.01 for compliance with CALTRANS QPL. Also see item 4 Testing in Section A above.

D. Materials Warranty:

(See Subsection 925.2.01 D for Materials Warranties).

925.2.03 Type 2070 Controller Subassemblies

A. Requirements

For 2070 controller subassemblies, use 2070 controller subassembly units that meet the requirements of the following or are previously approved by TSEF:

- *Traffic Electrical Equipment Specifications (TEES)* published by the State of California Business, Transportation, and Housing Agency; Department of Transportation, current edition and current addenda
- *CALTRANS* Qualified Products List (QPL)

The following Specifications augment the CALTRANS Specifications and take precedence over conflicting CALTRANS Specifications.

1. 2070 1B Module:

   The 2070 1B module may be supplied as a separate item to be used in all versions of the 2070 controller. The 2070 1B module shall be supplied complete with the operating software. Ensure it contains the required files to be compatible with the current GDOT applications software.

2. 2070 2A Field I/O Module

   The 2070 2A Field I/O module may be supplied as a separate item. The 2070 2A Field I/O module shall consist of the Field Controller Unit; Parallel Input/Output Ports; other Module Circuit Functions (includes muzzle jumper); Serial Communication Circuitry; Module Connectors C1S, C11S and C12S mounted on the module front plate; VDC Power Supply (+12VDC to + 5VDC) and required software. Ensure it contains any configuration jumpers to be compatible with current GDOT Applications software. Ensure the 2070 2A field I/O Module functions with a Model 2070L or 2070LB Controller Assembly and is compatible with current GDOT applications software.

3. 2070 2B Field I/O Module:

   The 2070 2B Field I/O module may be supplied as a separate item and consist of the Serial Communication Circuitry, DC power Supply, and Module Connector 12S mounted on the module front plate only. Ensure it contains any configuration jumpers to be compatible with current GDOT Applications software. Ensure the 2070 2B field I/O Module functions with a Model 2070 LC or 2070LN1 Controller Assembly and is compatible with current GDOT applications software.

4. 2070 2N Field I/O Module:

   The 2070 2N Field I/O module may be supplied as a separate item and provides a NEMA TS2-1compatible SDLC interface via Serial Port 3. AC power to the 2070 Unit and Fault Monitor Logic Output via 2070 Serial Port 5 and Output Frame Byte 9 Bit 6 to the NEMA TS2 Cabinet Monitor Unit (CMU). Ensure it contains any configuration jumpers to be compatible with current GDOT Applications software. Ensure the 2070 2N field I/O Module functions with a Model 2070 LN2 Controller Assembly and is compatible with current GDOT applications software.

5. 2070 3B Front Panel Display Module:

   The 2070 3B Display Module may be supplied as a separate item and provides a Front Panel Assembly controller, two keyboards, AUX switch alarm bell and an 8 line by 40 character display. This assembly shall also include a panel with latch assembly and two TSD #1 hinge attaching devices, assembly PCB, external serial port connectors, CPU active LED indicator, contrast adjustment knob, and Front Panel Harness. Ensure it contains any configuration jumpers to be compatible with current GDOT Applications software. Ensure the 2070 3B Front Panel Assembly Module functions with Models 2070L, 2070LC, 2070LN1 and 2070 LN2 Controller Assemblies and is compatible with current GDOT applications software. Ensure the hardware hinge attaching devices mate with existing 2070 assemblies. Ensure the Front Panel Harness is connected to the front panel via a removable connector. Ensure the front panel connector supports the aux switch.

6. 2070 3C Front Panel Display Module:

   The 2070 3C Display Module may be supplied as a separate item and provides a System Serial Port 6Lines, Isolated and vectored to Connector C60S. This assembly shall also include a panel with latch assembly and two TSD #1 hinge attaching devices, assembly PCB, external serial port connectors, CPU active LED indicator, and Front Panel Harness. Ensure it contains any configuration jumpers to be compatible with current GDOT Applications software. Ensure the 2070 3B Front Panel Assembly Module functions with Model 2070LB Controller Assembly and is compatible with current GDOT applications software. Ensure the hardware hinge attaching devices mate with existing 2070 assemblies. Ensure the Front Panel Harness is connected to the front panel via a removable connector. Ensure the front panel connector supports the aux switch.

7. 2070 4B Power Supply Module:

   The 2070 4B Power Supply Module may be supplied as a separate item and is an independent, self contained module. Ensure that it is vented and cooled by convection only. Provide module that slides into power supply compartment from the back of the chassis and is attached to the Backplane mounting surface by its four TSD #3 Devices. Ensure the module supplies at least 3.5 amperes of +5VDC. Ensure the 2070 4B Power Supply Module is compatible with Models 2070L, 2070LB, and 2070LC Controller Assemblies and is compatible with current GDOT applications software. Ensure the connection harness PS 2 on existing units can be mated with the 4B module supplied. A 2070 4A Power Supply Module may be provided in place of a 4B module as long as it is labeled as such and there is no additional cost to GDOT. Ensure the module supplied is appropriately marked as a 4B or 4A module.

8. 2070 4NB Power Supply Module:

   The 2070 4NB Power Supply Module may be supplied as a separate item and is an independent self contained module. Ensure that it is vented and cooled by convection only. Provide module that slides into power supply compartment from the back of the chassis and is attached to the Backplane mounting surface by its four TSD #3 Devices. Ensure the module supplies at least 3.5 amperes of +5VDC. Ensure the 2070 4B Power Supply Module is compatible with Models 2070 LN1 and 2070 LN2 Controller Assemblies and is compatible with current GDOT applications software. Ensure the connection harness PS 2 on existing units can be mated with the 4B module supplied. Ensure the 4NB power supply module supports the NEMA TS1 and TS2 Standards. A 2070 4A Power Supply Module may be provided in place of a 4B module as long as it is labeled as such and there is no additional cost to GDOT. Ensure the module supplied is appropriately marked as a 4NA or 4NB module.

9. 2070 6B Communications Module:

   The 2070 6B Communications Module is supplied as a separate item. The 6B communications module is a dual async/modem serial module. Ensure the module supports both Serial and modem FSK communications on both of two separate ports. Ensure the Modem data baud rate supports 0 to 9600. Ensure the module is configured to support

FSK communications on the C2S connection. Ensure it contains any configuration jumpers to be compatible with current GDOT Applications software.

10. 2070 7A Communications Module:

    The 2070 7A Communications Module may be supplied as a separate item. The 7A communications module is a dual async serial communications module. Ensure the module supports serial communications on both ports. Ensure it contains any configuration jumpers to be compatible with current GDOT Applications software.

11. 2070 8 Field I/O Module:

    The 2070 8 Field I/O Module may be supplied as a separate item. The 8 Field I/O Module consists of the module chassis, module power supply, Field Control Unit Controller, parallel input/output ports, serial communications circuits and module connectors. Ensure the EX1 connector is provided with appropriate mating connections to interface with either 6B or 7A communications modules. Ensure the 2070 8 Field I/O module is provided with the appropriate mating connector to mate with the C12S connector on the 2070 2B Field I/O module. Ensure the 2070 8 Field I/O module functions as part of a Model 2070 LN1 controller.

12. 2070 D Panel:

    The 2070 D panel is supplied as a separate item. The 2070 D panel supports the inputs and outputs of the "D" connector provided on a 2070-8 module which is also part of a Model 2070 LN1. Ensure the "D" Connector panel supports all 61 pins with a connecting MS "D" connector and terminal blocks. Ensure the 2070 D Panel provides adequate cable length to allow attachment in an existing NEMA Cabinet. Ensure that the terminal blocks allow for two connections.

B. Fabrication

General Provisions 101 through 150.

C. Acceptance

(See Subsection 925.2.01 for compliance with CALTRANS QPL).

D. Materials Warranty:

(See Subsection 925.2.01.D for Materials Warranties).

925.2.04 Cabinet Assemblies

A. Requirements

In addition to the CALTRANS Specifications, ensure that the cabinet assembly conforms to the requirements listed below, which take precedence over conflicting CALTRANS Specifications.

1. Cabinet configuration:

   Supply cabinets in accordance with these Specifications. Equip the cabinets with auxiliary equipment as follows:

   a. Model 332A Cabinet:

      Lower input field termination panel

      1 – Model 242 DC Isolator in Slot 14 of Upper Input File

      4 – Flash Transfer Relays

      2 – Model 204 Flashers

      1- Auxiliary Cabinet Shelf to support Communication Devices

      1- 4 Position Power Strip

      1- Manual push button assembly

   b. Model 336S Cabinet:

      1-Model 242 DC Isolator in Slot 14 of Input File

      4- Flash Transfer Relays

      2-Model 204 Flashers

      1- Auxiliary Cabinet Shelf to support Communication Devices

      1- 4 Position Power Strip

1- Manual push button assembly

1-"M" Base Adapter installed (Base Mount Cabinets Only)

1-Aluminum Cover Plate for Cabinet Bottom (Pole Mount Cabinets Only)

c. Model 337 Cabinet

3-Flash Transfer Relays

1-Model 204 Flasher

1- Manual push button assembly

d. Model 334 Cabinet with Auxiliary Output File for Ramp Metering Operations

1- Auxiliary Equipment Shelf

1- Output/PDA Type 3 with Model 206 24 Volt DC Power Supply with flash transfer relay

1- Model 208 Monitor Unit

1- Model 420 Auxiliary Output File

1-Load Switch Model 200

1- 4 Position Power Strip

1- Lower Input Field Termination Panel

1- Detector Test Switch Panel

Note: Include above components in cabinet at time of delivery.

Other auxiliary cabinet components such as controllers, monitors, load switches, etc. will be ordered as separate items.

2. Finish

Use cabinets that have a bare aluminum finish (see Subsection 925.2.07.A.1 for controller-cabinet minimum fabrication Specifications).

3. Locks

Equip the main cabinet door with locks that accept No. 2 Corbin keys. Provide two sets of keys with each cabinet. One set of keys is defined as one – No. 2 key and one - police panel key.

4. Power

Equip the cabinet assemblies with a power distribution assembly to generate AC and DC power for the electronic components, except the DC power for the controller units. Provide the Model 332 and 336S cabinets with a DC isolator for stop time/flash sense, located in slot 14 of the input file.

5. Mounting

Equip the cabinets for pole or base mounting, as specified in the Plans.

a. Base Mount

Supply Model 336S cabinets, when specified as base mount, with a “M” base-mounting adapter installed.

b. Pole Mount

Supply Model 336S or 337 cabinets, when specified as pole mount, with two exterior pole mounting brackets that allow for mounting on steel, concrete, and timber poles.

Ensure that the bracket mounting holes are properly reinforced with metal plates of adequate size and strength, welded longitudinally across the inside depth of the cabinet.

Ensure that the exterior-mounting bracket is shipped installed on the cabinet housing. Additionally, provide an aluminum plate, which covers the bottom cabinet opening.

6. Unused Phase Monitoring

Provide odd-phase reds with ballast resistor (2K, 10 watt) dummy loads. Do not wire the cabinet to monitor pedestrian yellow indications. When auxiliary output file is used provide resistors for overlaps.

Neatly lace, label and bundle the wiring from the signal monitor for pedestrian yellow monitoring on the back panel.

7. Red Monitoring

Provide a connector and terminal assembly designated as P20 for monitoring the absence of red as an integral part of the output file. Terminate the connector and ensure compatible with the cable and C connector of a Type 2010 conflict monitor unit capable of monitoring the absence of red.

Provide the pin assignments of the P20 connector and terminal assemble with the cabinet Plans.

Ensure that the P20 connector is physically alike to the cable and connector of a Type 2010 conflict monitor unit to prevent the absence of red cable connector from being inserted into the P20 connector 180 degrees out of alignment.

Submit details for programming of the unused red channels for approval.

8. Cabinet Light

Include in each cabinet one fluorescent strip lighting fixture mounted inside the top front portion of the cabinet. Do not use screw in type fluorescent lamp.

The fixture includes a cool white lamp, covered, and operated by a normal power factor, UL listed ballast.

Install a door-actuated switch to turn on the cabinet light when either door is opened.

9. Cabinet Interlock

Do not install the interlock circuit, as detailed in the CALTRANS Specifications.

10. Cabinet Drawer

Equip each Model 334, 332A, and 336S cabinet with an aluminum storage compartment mounted in the rack assembly with the approximate following dimensions: 16 inches (400 mm) wide, 14 inches (350 mm) long, and 1.75 inches (44 mm) deep.

Mount this compartment directly under the Type 2070 controller. Provide a drawer with telescoping drawer guides to allow full extension from the rack assembly.

When extended, the storage compartment opens to provide storage space for cabinet documentation and other miscellaneous items.

Ensure that the storage compartment be of adequate construction to support a weight of 25 pounds (12 kg) when extended.

Provide a top for the storage compartment that has a non-slip plastic laminate attached, which covers a minimum of 90% of the surface area of the top.

11. Auxiliary Equipment Shelf

Provide a “shelf” in each cabinet that provides a location to mount Fiber modem, dialup modem and/or Field hardened switch. Provide shelf in location that allows easy access to AC power outlets and communications links (telephone, interconnect). Locate shelf so as not block access to other equipment or modules including Battery Backup System.

12. Power Strip

Equip each cabinet with a metal power strip (minimum of 4 outlets) to support AC power for external communications devices in cabinet. Provide metal strip that is mounted vertically on the rear rail. Ensure that the power strip may be used by block power supplies such that the block power supply does not block other outlets. Attach power strip to a permanent location that is easily accessible to devices in the rear of the cabinet. Provide hard wire connection to the Cabinet AC power, controlled by a 15 amp GFI breaker. Do not use plug in power strips.

13. Surge Protection

Equip each cabinet with devices to protect the control equipment from surges and over voltages.

Design the surge protector panels to allow for adequate space for a wire connection and surge protector replacement without the removal of terminal blocks or panels. Provide surge protectors for the input sections as detailed below and as shown in the Input Terminal and Surge Arrestor Detail.

Supply surge protectors that meet the following Specifications.

a. AC Service Input

- Include a surge protection unit for each cabinet on the AC service input that meets or exceeds the following requirements: Provide a hybrid type power line surge protection device on the cabinet service panel..

Install the protector between the applied line voltage and earth ground. Use a surge protector capable of reducing the effect of lightning transient voltages applied to the AC line that conforms to the following:

Peak surge current for an 8 x 20 µs waveform:	20,000A for 20 occurrences
Clamp voltage @ 20,000A:	280V max
Maximum continuous operating current:	@ 120V / 60 Hz 10A
Series Inductance:	AC Line/AC Neutral - 200 micro henries
Response time:	Voltage never exceeds 280V during surge

Spike suppression for +/- 700 V spike: +/- 40 V deviation from sine wave at all phases angles between 0 and 180 degrees.

- Provide a protector that is modular and uses a 12 pin Beau connector with the following terminals:
  - Main Line (AC line first stage terminal)
  - Main Neutral (AC neutral input terminal)
  - Equipment Line In (AC line second stage input terminal, 10A)
  - Equipment Line Out (AC line second stage output terminal, 10A)
  - Equipment neutral out (neutral terminal to protected equipment)
  - GND (Earth connection)
- Supply a protector that is epoxy encapsulated in a flame-retardant material.
- Configure the Equipment Line Out to provide power to the Type 2070 and to the 24 V power supply.

b. AC+ Interconnect Cable Inputs

Use a surge protection device to protect each AC interconnect line as it enters the cabinet with a surge protection device that meets or exceeds the following requirements:

- 3-electrode gas tube type of surge arrestor
- Striking voltage of 300-500 V DC with a minimum holder over voltage of 155V DC
- A three terminal device, one of which is connected to ground, the other two are connected across each input respectively
- The units must meet the following minimum requirements:

Impulse breakdown:	Less than 100V in less than 1.1 µs at 10 kV/µs
Impulse breakdown balance:	0.01 microsecond (or less) difference at 10 kV/µs impulse
Energy application:	Withstands 20A AC for one (1) second applied ten (10) times at three (3) minute intervals on either section
Current rating:	10,000A (8 x 20 µs impulse)
Capacitance:	6 pF, line to ground

c. Inductive Loop Detector Inputs

Provide surge arrestors in the cabinet as shown in Table 925-5, Table 925-7 or Table 925-9 for the applicable cabinet. Protect each inductive loop detector channel input by an external surge protection device that meets or exceeds the following requirements:

- A three-terminal device, two (2) of which are connected across the signal inputs of the detector with the third connected to the chassis ground to protect against common mode damage.
- Instantly clamps differential mode surges (induced voltage across the loop detector input terminals) via a semiconductor array. The array appears as a low capacitance to the detector.
- Clamps common mode surges (induced voltage between the loop leads and ground) via solid state clamping devices.
- Withstand 25-100A surge current occurrences of a 10 x 700 µs waveform.
- Have the following clamp characteristics:
  - Maximum break over voltage: 170 V
  - Maximum on-stage clamping voltage: 3V
  - Response Time: <5 ns
  - Off-stage leakage current: <10 µA
  - Capacitance: less than 220 pf
- Ensure that the unit also meets the following minimum requirements:
  - Peak surge current: 6 times
  - Differential mode: 400 A (8 x 20 ms)
  - Common mode: 1,000 A (8 x 20 ms)

- Estimated occurrences: 500 @ 200 A
- Response time: 40 ns
- Input capacitance: 35 pF typical
- Temperature: -40° F to +185° F (-40º C to 85º C)
- Mounting: No. 10-32 x 3/8-inch (No. 5 x 10 mm) bolt
- Clamp voltage
    - @400 A diff. Mode: 30 V max.
    - @1,000 A comm. Mode: 30 V max.

d. Signal Load Switches (Switchpacks)

Provide the output of all switchpacks in all output files and output/PDAs with metal oxide varistors (MOV) tied from the AC positive field terminal to the chassis ground to protect switchpacks from surges on the AC output lines

Ensure that these MOVs meet or exceed these requirements:

- Steady state sinusoidal voltage (RMS) rating at 50 to 60 Hz of at least 150 V at 77 ºF (25 °C)
- Steady state applied DC voltage rating of at least 200 V at 77 ºF (25 °C)
- Transient energy rating is of at least 80 J for a single impulse of 10/1,000 µs current waveform at 77 ºF (25 °C)
- Peak current rating of 6,500 A for a single impulse of 8/20 µs waveform with the rated continuous voltage applied
- Varistor voltage of at least 212 V at 1.0mA of DC current applied for the duration of 20 µs to 5s
- Clamping voltage of at least 395 V with an applied 8/20 µs impulse of 100 A
- Typical capacitance at a frequency of 0.1 to 1.0 MHz of 1600 pF
- Two-terminal device, one of which is connected to the AC output of the signal load switch on the output file terminals (backside of the field terminals) with the other connected to AC neutral

e. Communication Inputs

Protect low voltage communications input as it enters the cabinet with a solid-state surge protection unit that meets or exceeds these requirements:

- Dual pair (4-wire) module with a printed circuit board connector, double sided and gold plated for reliability
- Ability to mate with and be installed in a 10-circuit Buchanan connector Part Number PCB1B10S or Tyco Part Number 2-1437410-3 or equivalent
- Usable as two independent signal pairs
- The data circuits pass through the protection in a serial fashion
- C2 connector of the 2070 controller that terminates on the line side of the unit
- Communication field wires for this local side that terminate on the line side of the unit
- Ground terminals connected to power ground
- Ensure that the unit meets the following minimum requirements:

Peak surge current:	10 kA (8 x 20 µs wave shape) 500A (10 x 700 µs wave shape)
Occurrences @ peak:	50 typical
Response time:	<1ns
Voltage Clamp:	8V line to line
Series Resistance:	24 Ω total
Temperature	-40 ºF (-40 ºC) to +185 ºF (85 ºF)
Primary protector:	3 element gas tube 5kA, (8 x 20µs wave shape), per side
Secondary protector:	Silicon avalance, 1.5 kW minimum

f. Low Voltage DC Inputs

Provide an external surge protection device for each low voltage DC input channel which meets the same requirements as the communication inputs with the following exception of the Voltage clamp, which shall be 30 V line-to-line.

14. Type 2010 Signal Monitors:

a. Introduction

This Specification sets forth the minimum requirements for a rack-mountable, sixteen channel, solid-state 2010 Signal Monitor for Traffic Cabinet Assembly. Ensure that as a minimum, the Signal Monitor complies with all Specifications outlined in Chapter 3 Section 6 of the *California TEES*, August 2002. Where differences occur, this Specification governs. Ensure that the manufacturer of the unit is listed on the current California Department of Transportation (CALTRANS) Qualified Products List (QPL) for signal monitors.

Provide a Signal Monitor that is capable of monitoring sixteen channels consisting of a Green input, a Yellow input, and a Red input for each channel. Ensure that the unit also includes the enhanced monitoring functions described in Subsection 925.2.04.A.15.b, diagnostic display functions described in Subsection 925.2.04.A.15.c, event logging functions described in Subsection 925.2.04.A.15.d, communications functions described in Subsection 925.2.04.A.15.e, and hardware functions described in Subsection 925.2.04.A.15.f.

b. Monitor Functions

Except for Conflict faults, compute all fault timing for each channel individually.

1) Conflict Monitoring

Ensure that the Signal Monitor is able to detect the presence of conflicting green or yellow signal voltages on the AC field terminals between two or more non-compatible channels. A Conflict fault (CONFLICT) shall be a latching fault.

2) Conflict Recognition Time

Ensure the Signal Monitor shall trigger when voltages on any conflicting channels are present for more than 500 ms. Ensure that the Signal Monitor does not trigger when voltages on any conflicting channels are present for less than 200 ms. Conflicting signals sensed for more than 200 ms and less than 500 ms may or may not trigger the unit.

3) 24VDC Monitoring VDC

Ensure that the Signal Monitor is able to detect that the cabinet +24 Vdc supply has fallen below 18 Vdc. A 24VDC failure (VDC FAIL) shall be a latching fault.

4) 24VDC Recognition Time

Ensure that the Signal Monitor shall trigger when the voltage on the +24V input is below 18 Vdc for more than 500 ms. Ensure that the Signal Monitor does not trigger when the voltage on the +24V input is below 18 Vdc for less than 200 ms. A voltage level of +22 Vdc will be required to prevent the unit from triggering.

5) Controller Watchdog Monitoring

Ensure that the Signal Monitor triggers when the Watchdog input does not toggle within the programmed time period (WDT ERROR). Ensure that the unit remains latched in the fault state until reset by the Reset button, an External Reset input command, or AC Line voltage restoring from an AC Line Brownout event (see 2.4). Ensure that a reset resulting from an AC Line Brownout event does not clear the WDT ERROR LED.

a) Controller Watchdog Latch Option

Ensure a programming option sets the Watchdog monitoring function to a latching mode and that only a reset from the Reset button or External Reset input can clear a Watchdog fault. An AC Line brownout condition will not reset the fault.

b) Controller Watchdog Recognition Time

Ensure a programming option sets the maximum Watchdog recognition time to: 1000 + or - 100 ms; or 1500 + or - 100 ms.

c) Controller Watchdog Enable Switch

Provide an internal switch to disable the Watchdog monitoring function. Mount the switch on the PCB and be clearly label "WD ENABLE - ON...OFF". Ensure that placement of the switch in the OFF position causes monitoring of the Watchdog to be inhibited.

d) WDT ERROR LED Control

Ensure that the WDT ERROR LED illuminates when the unit has been triggered by a Watchdog fault. Ensure that it can only be cleared by a reset command from the front panel Reset switch or External Reset input. If the Watchdog monitoring function is inhibited due to the Watchdog Enable switch, the WDT ERROR LED shall flash at a 0.5 Hz rate.

6) AC Line Monitoring

a) AC Line Brownout Recognition

Ensure that the Signal Monitor is able to detect that the AC Line has fallen below 98 + or - 2 Vac for greater than 400 + or - 50 ms. This shall force the output Relay to the de-energized "fault" state, enable the Stop-Time output, and cause the AC POWER LED to flash at a 2 Hz rate. Ensure that the unit maintains this state until the AC Line voltage rises above 103 + or - 2 Vac for greater than 400 + or - 50 ms. Provide a jumper option which will change the AC Brownout dropout level to 92 + or - 2 Vac and the restore level to 98 + or - 2 Vac.

b) AC Line Power-up and Brownout Delay Time

When the AC Line is greater than 103 + or - 2 volts after power-up or Brownout restore, ensure that the Signal Monitor holds the Output Relay in the de-energized "fault" state and enable the Stop-Time output, for a period of not less than 6.0 + or - 0.5 seconds and not greater than 10.0 + or - 0.5 seconds. Ensure that this flash interval is terminated after at least 6.0 + or - 0.5 seconds if the Signal Monitor has detected at least five transitions of the Watchdog input. If the Signal Monitor does not detect five transitions of the Watchdog input before 10.0 + or - 0.5 seconds, ensure that the Signal Monitor goes to the fault state. During this interval, ensure that the AC POWER LED flashes at a 4 Hz rate.

7) Red Fail Monitoring

Ensure that the Signal Monitor is able to detect the absence of an active voltage on the green and yellow and red field signal inputs of a channel. Red Fail fault (RED FAIL) shall be a latching fault. Ensure that the Red Fail monitoring function is enabled for all channels except when the Red Enable input is not active, or pin #EE is active, or Special Function #1 input is active, or Special Function #2 input is active.

a) Red Fail Recognition Time

Ensure the Signal Monitor triggers when an active voltage on one of the three inputs of a channel are absent for more than 1500 ms. Ensure that the Signal Monitor does not trigger when an active voltage on one of the three inputs of a channel are absent for less than 1200 ms. Channels without proper voltages sensed for more than 1200 ms and less than 1500 ms may or may not trigger the unit. Provide an option switch (RF 2010) which will change the fault recognition time to between 700 ms and 1000 ms.

b) Red Interface Cable Fault

Ensure a programming option is provided such that operating without the Red Interface cable installed shall cause the Signal Monitor to enter the fault mode causing the Output relay contacts to close and enabling the Stop-Time output to the controller. To indicate this fault mode, ensure that the Red Fail indicator is illuminated with all fault channel indicators Off.

Ensure that any Red Fail preemption control to the monitor uses the Special Function inputs #1 or #2.

8) Dual Indication Monitoring

Ensure that the Signal Monitor is able to detect the presence of active voltage on the green and yellow, green and red, or yellow and red field signal inputs of a channel. GYR Dual Indication fault (DUAL IND) shall be a latching fault. Ensure this function is enabled on a per channel basis using dip switches mounted on the PCB labeled "CH1" through "CH16". Ensure that the GYR Dual Indication monitoring function is enabled for all selected channels except when the Red Enable input is not active or pin #EE is active.

a) GY Dual Indication Monitoring

Ensure that the Signal Monitor is able to detect the presence of active voltage on the green and yellow field signal inputs of a channel. GY Dual Indication fault (DUAL IND) shall be a latching fault. Enable this function with a dip switch on the PCB labeled "GY ENABLE". When the switch is in the ON position, monitor all channels for simultaneous active green and yellow inputs on a channel. When selected by the GY ENABLE switch, ensure that the GY Dual Indication monitoring function is disabled when pin #EE is active.

b) Dual Indication Recognition Time
Ensure that the Signal Monitor triggers when multiple inputs are active on a channel for more than 500 ms. Ensure that the Signal Monitor does not trigger when multiple inputs are active on a channel for less than 250 ms. Channels with multiple voltages active for more than 250 ms and less than 500 ms may or may not trigger the unit.

9) Clearance (Short or Absent Yellow) Monitoring
Ensure that the Signal Monitor is able to detect that a channel has not provided an adequate Yellow Clearance interval during a green to yellow to red sequence. A Sequence failure (SEQUENCE) shall be a latching fault. Ensure that this function is enabled on a per channel basis using dip switches mounted on the PCB labeled "CH1" through "CH16". Ensure that the Sequence monitoring function is enabled for all selected channels except when the Red Enable input is not active or pin #EE is active.

10) Clearance Recognition Time
Ensure that the Yellow Clearance interval is 2.7 seconds

11) Flickering Indication Detection
Ensure that the Signal Monitor provides a method of detecting Conflict, Red Fail, and Dual Indication faults that result from intermittent or flickering field signal inputs that may not meet the duration requirements but continue to flicker for an extended period of time. These flickering indications shall result in a latching fault with an indication illuminated along with the resulting Conflict, Red Fail, or Dual Indication indicator. Provide an option switch to disable this option.

12) Configuration Change Monitoring
On power-up, reset, and periodically during operation, ensure that the Signal Monitor compares the current configuration settings with the previously stored value and if the settings have changed, the Signal Monitor automatically logs the new setting. Ensure that these settings include the permissive diode matrix, all switches, all jumpers, and the Watchdog Enable switch.

Provide a programming option such that any change in the configuration parameters will cause the Signal Monitor to enter the fault mode causing the Output relay contacts to close and enabling the Stop-Time output to the controller. To indicate this fault mode ensure that the PCA indicator will flash at a 4 Hz rate. Depressing the Reset button for 5 full seconds is required to clear this fault and log the new configuration parameters.

If the programming option is not selected, ensure that the unit does not set the fault mode but will still log the configuration change.

13) Program Card Ajar
Ensure that when the Programming Card is removed or not seated properly, the Signal Monitor forces the Output Relay to the de-energized "fault" state, enable the Stop-Time output, and illuminate the PCA LED. A reset command from the front panel Reset switch or External Reset input is required once the Program Card is in place.

14) Exit Flash
When the Signal Monitor exits the flash state (Output relay de-energized) as a result of a Reset command or AC Line brownout restore, ensure that the Stop Time output goes to the inactive state 250 + OR - 50 ms before the Output relay transfers to the energized state. This transition will provide an early indication to the Controller Unit that the cabinet will transfer from flash to signal operation.

c. Display Functions
Ensure that it is possible to view the active channels for each individual color (GYR) during operation and when latched in a fault state. When the Signal Monitor is latched in a fault state ensure that it is also be possible to view the active channels for each individual color and fault status for each channel for the current fault and the two previous faults.

1) Previous Fault GYR Display
When the Signal Monitor has been triggered by a fault the channel status display will alternate between the channels which were involved in the fault (fault status) for 2 seconds, and the field signals active at the time of the fault for 6 seconds. The channels involved in the fault will flash their respective Green, Yellow, and Red indicators simultaneously at a 4 Hz rate for the 2 second interval.

The two previous faults may also be displayed individually. This status is not reset by an AC Line power interruption. To enter this display mode remove the Program Card. The sequence is as follows:

Reset	Event	PCA LED	Fault Status LEDs	Channel Status LEDs
---	#1	Single flash	Current Fault Status (newest)	Current Field status
#1	#2	Double flash	Event #2 Fault Status	Event #2 Field status
#2	#3	Triple flash	Event #3 Fault Status (oldest)	Event #3 Field status
(repeats back to top)				

d. Event Logging Functions

Ensure that the Signal Monitor is capable of storing in non-volatile memory a minimum of 100 events. Mark each event with the time and date of the event. These events consist of fault events, AC Line events, reset events, and configuration change events. Provide a graphical means of displaying the signal states of all field inputs for 30 seconds prior to a fault trigger event. Provide the capability to assign a four-digit identification number to the unit shall be provided. Upload the event logs to a PC using the serial port of the Signal Monitor and software provided by the manufacturer.

Ensure each event log report contains the following information:

- Monitor ID#: a four digit (0000-9999) ID number assigned to the monitor.
- Time and Date: time and date of occurrence.
- Event Number: identifies the record number in the log. Event #1 is the most recent event.

1) Monitor Status Report (CS)

Ensure the Current Status report contains the following information:

Fault Type: the fault type description.

Field Status: the current GYR field status and field RMS voltages if the monitor is not in the fault state, or the latched field status and field RMS voltages and fault channel status at the time of the fault.

Cabinet Temperature: the current temperature if the monitor is not in the fault state, or the latched temperature at the time of the fault.

AC Line Voltage: the current AC Line voltage if the monitor is not in the fault state, or the AC Line voltage at the time of the fault.

Control Input Status: the current state and RMS voltages of the Red Enable input, EE input, and Special Function #1 and #2 inputs if the monitor is not in the fault state, or the status latched at the time of the fault.

2) Previous Fault Log (PF)

Ensure the Previous Fault log contains the following information:

Fault Type: the fault type description.

Field Status: the latched field status with RMS voltages, and fault channel status at the time of the fault.

Cabinet Temperature: the latched temperature at the time of the fault.

AC Line Voltage: the AC Line voltage at the time of the fault.

Control Input Status: the latched state of the Red Enable input, EE input, and Special Function #1 and #2 inputs at the time of the fault.

3) AC Line Event Log (AC)

The AC Line log shall contain the following information:

Event Type: describes the type of AC Line event that occurred.

- Power-up—AC on, monitor performed a cold start
- Interrupt—AC Line < Brownout level
- Restore—AC restored from brown-out or interruption (AC Off), no cold start

AC Line Voltage: the AC Line voltage at the time of the event.

4) Monitor Reset Log (MR)

Ensure the Monitor Reset log contains the following information:

The monitor was reset from a fault by the front panel Reset button or External Reset input.

5) Configuration Change Log (CF)

Ensure the Configuration Change log contains the following information:

a) Program Card Matrix: the permissive programming for each channel.

b) Yellow Disable Jumpers: the Yellow Disable programming for each channel.

c) Dual/Sequence Switches: the switch programming for each channel.

d) Option Switches: RF 2010, RP Disable, GY Enable, SF1 Polarity, Sequence Timing, Minimum Flash Enable, Configuration Fault Enable, Red Cable Fault enable, AC Brownout timing.

e) Watchdog Programming: Watchdog Enable, Watchdog Latch, and Watchdog timing.

f) Configuration CRC: A unique CRC value which is based on the configuration of items #a though #e above.

Indicate on the log, which items have been changed since the last log entry.

6) Signal Sequence Log

Provide a log that graphically displays all field signal states for up to 30 seconds prior to the current fault trigger event. Ensure that the resolution of the display is at least 50 milliseconds.

e. Communications Functions

1) Controller Unit Communications

Ensure that the Signal Monitor is compatible with the protocol of the current GDOT licensed firmware for 2070 controllers and Central System Control. Ensure the 2010 Conflict Monitor supplied is able to communicate via a serial link to the 2010 Controller and then to a Central System using the current licensed GDOT Central System Software for reporting, configuring and logging.

2) Personal Computer Communications

Have the manufacturer provide software to access the Signal Monitor status and event logs described in Subsection 925.2.04.A.15.d. Ensure this software operates with current version of Microsoft Windows or Windows XP™

f. Hardware

1) Red Monitoring

a) Red Field Inputs

Ensure that the Signal Monitor is capable of monitoring sixteen Red field signals. Ensure that a Red input is sensed active when the input voltage exceeds 70 Vrms. Ensure that a Red input is sensed not active when the input voltage is less than 50 Vrms. A Red input may or may not be sensed active when the input voltage is between 50 Vrms and 70 Vrms.

b) Red Enable Input

Ensure that the Red Enable input provides an AC input to the unit which enables Red Monitoring, Dual Indication Monitoring, and Sequence monitoring when the input is sensed active.

Ensure that the Red Enable input is sensed active when the input voltage exceeds 70 Vrms. Ensure that the Red Enable input is sensed not active when the input voltage is less than 50 Vrms. The Red Enable input may or may not be sensed active when the input voltage is between 50 Vrms and 70 Vrms.

c) Special Function Preemption Inputs

Ensure that the Special Function Preemption inputs #1 and #2 provide an AC input to the unit which disables only Red Fail Monitoring (Lack of Output) when either input is sensed active.

Ensure that a Special Function input is sensed active when the input voltage exceeds 70 Vrms. Ensure that a Special Function input is sensed not active when the input voltage is less than 50 Vrms. A Special Function input may or may not be sensed active when the input voltage is between 50 Vrms and 70 Vrms.

Use a PCB mounted switch to provide the option to invert the active status of the Special Function #1 input. When the switch is in the ON position, ensure that the Special Function #1 input is sensed not active when the input voltage exceeds 70 Vrms. Ensure that the Special Function #1 input is sensed active when the input voltage is less than 50 Vrms. The Special Function #1 input may or may not be sensed active when the input voltage is between 50 Vrms and 70 Vrms.

d) Red Interface Connector

This connector provides the required inputs for the unit to monitor the Red field signal outputs. Ensure the connector is a 20 pin connector that mates with the P20 Cable from the output file. Provide a high quality connector that is polarized to insure proper mating with the cable. Ensure Ejector latches are included to facilitate removal and prevent the cable from inadvertently disconnecting. Ensure the unit

shall function as a standard 210 Signal Monitor when the cable is disconnected. Use the pin assignments shown in Table 925-1.

Table 925 -1 Red Interface Connector

Pin	Function	Pin	Function
1	Channel 15 Red	11	Channel 9 Red
2	Channel 16 Red	12	Channel 8 Red
3	Channel14 Red	13	Channel 7 Red
4	Chassis Ground*	14	Channel 6 Red
5	Channel 13 Red	15	Channel 5 Red
6	Special Function #2	16	Channel 4 Red
7	Channel 12 Red	17	Channel 3 Red
8	Special Function #1	18	Channel 2 Red
9	Channel 10 Red	19	Channel 1 Red
10	Channel 11 Red	20	Red Enable
*A jumper option shall be provided to allow the connection of Pin #4 to be made with Chassis Ground.			

2) Front Panel

Ensure the front panel is constructed of sheet aluminum with a minimum thickness of 0.090 in. (2.286 mm), and finished with an anodized coating. Ensure the model information shall be permanently displayed on the front surface.

a) Indicators

Ensure that all display indicators are mounted on the front panel of the Signal Monitor and are water clear, T-1 package, Super Bright type LEDs. Ensure that all fault LEDs are red except the AC POWER indicator which is green. Provide a separate Red, Yellow, and Green indicator for each channel. Label the indicators and provide the information as follows:

i. AC POWER

Ensure the AC Power indicator flashes at a rate of 2 Hz when the unit has detected a low voltage condition as described in Subsection 925.2.04.A.15.b.10).a. Ensure the AC POWER indicator flashes at a rate of 4 Hz during the minimum flash interval as described in Subsection 925.2.04.A.15.b.10).b. Ensure that the indicator illuminates when the AC Line voltage level is restored above the brownout level. Ensure the indicator extinguishes when the AC Line voltage is less than 80 Vac.

ii. VDC FAILED

Ensure the VDC FAILED indicator illuminates when a 24VDC fault condition is detected. This indicator remains extinguished if the monitor has not been triggered by a 24VDC fault.

iii. WDT ERROR

Ensure the WDT ERROR indicator illuminates when a controller Watchdog fault is detected. Ensure the WDT Error indicator flashes ON once every 2 seconds if the WD Enable switch on the monitor is placed in the OFF position to disable Watchdog monitoring, or the AC Line voltage is below the Watchdog disable level.

iv. CONFLICT

Ensure that the CONFLICT indicator illuminates when a conflicting signal fault is detected.

v. DIAGNOSTIC

Ensure the DIAGNOSTIC indicator illuminates when one of the following faults is detected: Internal Watchdog fault, Memory Test fault, or Internal power supply fault. This indicator is intended to inform the service technician of a monitor hardware or firmware failure.

vi. RED FAIL

Ensure the RED FAIL indicator illuminates when an absence of signal is detected on a channel(s). Ensure the RED FAIL indicator flashes ON once every two seconds if the RED ENABLE input is not active, or a Special Function input is active, or the EE input is active

vii. DUAL IND.

Ensure the Dual IND. indicator illuminates when a GY-Dual or GYR-Dual Indication fault is detected on a channel(s).

viii. CLEARANCE

Ensure the Sequence indicator illuminates when the minimum Yellow Clearance time has not been met on a channel(s).

ix. PCA

Ensure the PCA indicator illuminates if the Program Card is absent or not properly seated.

If the unit is in the Diagnostic Display mode, ensure the PCA indicator flashes ON (once, twice, or three times) to indicate the fault event number being displayed. See Subsection 925.2.04.A.15.c.

x. RP DETECT

Ensure the RP DETECT indicator illuminates when the unit has detected a Conflict, Red Fail, or Dual Indication fault as a result of recurring pulse field inputs.

xi. CHANNEL STATUS

Ensure that during normal operation the 48 Channel Status indicators display all active signals (Red, Green, and Yellow).

In the fault mode, ensure that the Channel Status indicators display all signals active at the time of the fault for six seconds and then indicate the channels involved in the fault for 2 seconds.

b) Front Panel Control-Reset Button

i. Provide a momentary SPST Control switch labeled RESET on the unit front panel to reset the monitor circuitry to a non-failed state. Position the switch on the front panel such that the switch can be operated while gripping the front panel handle. Ensure that a reset command issued from either the front panel button or External Reset input is a one-time reset input to prevent the unit from constant reset due to a switch failure or constant external input, and causes all LED indicators to illuminate for 300 ms.

ii. The Reset button also provides control of the Diagnostic Display mode. For a complete description of Diagnostic Display operation, see Subsection 925.2.04.A.15.c.

c) Serial Communications Connector

Use this connector to provide EIA-232 serial communications. Ensure that it is a high quality 9 pin metal shell D subminiature type with female contacts. Refer to Table 925-2 for Pin assignments.

Table 925-2 Serial Communications Connector

Pin	Function
1	DCD*
2	TX DATA
3	RX DATA
4	DTR (Data Terminal Ready)
5	SIGNAL GROUND
6	DSR
7	DSR*
8	CTS*
9	NC

* Provide Jumper options to allow the connection of Pin #4 to be made with Pin #7, and the connection of Pin #8 to be made with Pin #1.

3) Electronics

a) RMS Voltage Sampling

Use high speed sampling techniques to determine the true RMS value of the AC field inputs. Sample each AC input at least 32 times per cycle. Ensure that the RMS voltage measurement is insensitive to phase, frequency, and waveform distortion.

b) Internal MPU Watchdog

Use a microprocessor for all timing and control functions. Verify continuing operation of the microprocessor by an independent monitor circuit, that forces the Output Relay to the de-energized "fault" state, enable the Stop-Time output, and illuminate the DIAGNOSTIC indicator if a pulse is not received from the microprocessor within 300 ms.

If the microprocessor should resume operation, ensure the Signal Monitor continues to operate. Ensure that this monitoring circuit is also configurable to latch in the fault state. Ensure the unit requires a power-up cycle to reset the circuit once it is triggered.

c) Sockets

In the interest of reliability, ensure that only the PROM memory device for the microprocessor firmware is socket mounted. Ensure that the PROM memory socket is a precision screw machine type socket with a gold contact finish providing a reliable gas tight seal. Low insertion force sockets or sockets with "wiper" type contacts are not acceptable.

d) Internal Power Supply

Use a built-in, high-efficiency switching power supply to generate all required internal voltages. Ensure that all supply voltages regulated. Failure of the internal power supply to provide proper operating voltages shall force the output Relay to the de-energized "fault" state, enable the Stop-Time output, and illuminate the DIAGNOSTIC indicator. Provide a user replaceable slow blow fuse for the AC Line input. Ensure the unit is operational over the AC Line voltage range of 75 Vac to 135 Vac.

e) EIA-232 Interface

Ensure the EIA-232 port interface electronics is electrically isolated from all monitor electronics except chassis ground.

f) Configuration Parameters

Select user-programmed configuration settings using PCB mounted switches or jumpers. Designs requiring a Personal Computer (PC) to program or verify the configuration parameters are not acceptable. Ensure that user-programmed configuration settings that are transferred to memory are stored in a programmable read-only memory (PROM or EEPROM). Designs using a battery to maintain configuration data are not acceptable.

g) Field Terminal Inputs

Ensure that all 120 Vac field terminal inputs provide an input impedance of 150K 50K ohms and be terminated with a discrete resistor having a power dissipation rating of 0.5 Watts or greater and a voltage rating exceeding 350 volts.

h) Component Specifications

Ensure that all electrical components used in the Signal Monitor are rated by the component manufacturer to operate beyond the full unit operating temperature range of –29 ^{o}F to 165 ^{o}F(-34 ^{o}C to +74 ^{o}C).

i) Printed Circuit Boards

Ensure that all printed circuit boards meet the requirements of the *California Traffic Signal Control Equipment Specifications*, January 1989, plus the following requirements to enhance reliability:

i. All plated-through holes and exposed circuit traces are plated with solder.

ii. Both sides of the printed circuit board are covered with a solder mask material.

iii. The circuit reference designation for all components and the polarity of all capacitors and diodes are clearly marked adjacent to the component. Ensure that Pin #1 for all integrated circuit packages is designated on both sides of all printed circuit boards.

iv. All electrical mating surfaces are gold plated.

v. All printed circuit board assemblies are coated on both sides with a clear moisture-proof and fungus-proof sealant.

vi. All components and wire harnesses are mounted to the PCB using plated holes. "Piggy back" connections or jumper wires are not acceptable.

15. Model 208 Monitor Unit

Provide Model 208 Monitor Unit in accordance with CALTRANS TEES and the following. Provide monitor that is on the CALTRANS QPL and provides the pin assignment as shown in Table 925-3.

The Model 208 Monitor Unit shall reliably sense and cause a relay output contact (FAILED STATE) when monitoring the following:

- A Watchdog Timer (WDT) Timeout Condition
- Cabinet +24 VDC Power Supply below specified threshold

a. WDT Monitor Requirements

b. WDT Circuitry shall be provided to monitor a controller unit output line state routed to the monitor unit at its assigned pin. The WDT Circuitry shall sense any line state change and the time between the last change. No state change for 1.5 ± 0.1 seconds shall cause a FAILED state. The timer shall reset at each state change in a NON FAILED state.

1) Only the Unit Reset or a WDT inactive due to the voltage sense shall reset the WDT from a FAILED state.
2) A FAILED state caused by the WDT shall illuminate a front panel indicator light label “WDT ERROR”. The indicator shall remain ON until Unit Reset Issuance.
3) The WDT Circuitry shall sense the incoming VAC Line and when the voltage falls below 98 ± 2VAC for 50 ± 17 ms shall inhibit the WDT Function. When the WDT Circuitry sensed the incoming VAC Line rise above 103 ± 2VAC for 50 ± 2ms the WDT shall become active. A hysteresis between the Voltage Inhibit and the Voltage Active Setting shall be a minimum of 3 Volts.

c. Power Supply Monitor Requirements

1) The monitor unit shall sense the Cabinet +24 VDC Power Supply Output Voltage.
2) Voltages sensed at +18 VDC or below for a duration of 500 ms or longer shall cause a FAILDED state.
3) Voltages sensed at+22 VDC or above shall NOT cause a FAILED state.
4) Voltages sensed below +22 VDC for a duration of 200 ms or less shall NOT cause a FAILED state.
5) All timing and voltages conditions other than those specified above may or may not cause a FAILED state.
6) A FAILED state caused by sensing the power supply shall illuminate a front panel indicator light labeled “VDC FAILED”. The indicator shall remain ON until Unit Reset.
7) Only Unit Reset shall reset the power supply sense circuitry from a FAILED state.

d. FAILED State Output Circuits

1) An electro-mechanical relay shall be provided to switch an output circuit during a FAILED state. The relay coil shall be energized in a NON FAILED State.
2) The relay contacts shall be rated for a minimum of 3 amperes at 120 VAC and 100,000 operations. Contact opening /closing time shall be 30 ms or less.

e. Monitor Unit Reset

1) A momentary SPST CONTROL switch labeled “RESET” shall be provided on the unit front panel to reset the monitor unit circuitry to a NON FAILED state. The switch shall be so positioned on the front panel that the switch can be operated while gripping the front panel handle.
2) The unit shall be provided with provision to drive an external NE2H light through a 56K Ohm, ½ Watt Series resistor (resident on unit)
3) The PDA Type 3 WDT Reset Input shall not be sensed by the unit
4) The output relay CONTACT FOR FAILED STATE shall be OPEN.

Table 925-3 Pin Assignments For Model 208 Monitor Unit	
PIN	**FUNCTION**
1/44	DC Ground
2/43	WDT Ext. Reset
5/40	WDT IN
10/35	+24 VDC
15/30	AC-
17/28	Normally Open, Circ. #2
19/26	AC+
20/25	Normally Closed, Circ. #1
21/24	Circ. Common #1 & #2
22/23	WDT Lamp (External)
NOTE: Card connector keyed between pins 2 & 3, and pins 11 & 12.	

16. Model 242 DC Isolator

    Provide Model 242 DC Isolators that are in accordance with the latest version of CALTRANS Specifications as referenced earlier in this section. Provide isolators that:

    - Allow the 242 isolator input signal polarity to easily be inverted without the use of tools. Acceptable methods are removable jumpers or dip switches. Unacceptable methods are soldering or desoldering a diode or resistor.
    - Output is OFF for input voltages greater than 12 volts;
    - Output is ON for voltages of less than 8 volts that have a duration of at least 5 to 25 ms (optional 2-7 ms);
    - Minimum output pulse width is 100 ms with a valid input (can be disabled);
    - Output is optically isolated open collector NPN transistor;
    - Capable of sinking 50 ma when on;
    - Can register a new input within 25 ms of the old signal going away; and
    - Output clamped on power up and down
    - Compatible with 2070 controllers and latest version of CALTRANS TEES including errata

17. Model 200 Switchpack

    Provide Model 200 Switchpacks that are in accordance with the latest version of CALTRANS Specifications as referenced earlier in this section.

18. Model 204 Flasher Unit

    Provide Model 204 Flasher Units that are in accordance with the latest version of CALTRANS Specifications as referenced earlier in this section.

19. Flash Transfer Relay

    Provide Flash Transfer Relays that are in accordance with the latest version of CALTRANS Specifications as referenced earlier in this section.

20. Cabinet Model 332A

    Table 925-5 Required Surge Arrestors for Model 332A Cabinet.

    Supply Model 332A (lower input panel) cabinets, with housing Type 1B, and all components as described in these Specifications.

    Supply cabinets having two input files which conform to the CALTRANS Specifications and configured to accept two 2070 controllers in the top portion of the cabinet. Ensure the cabinet has two shelves provided for controller(s).

    Configure the cabinet for dial up communications. Mount a two (2) circuit Buchanan connector on the right side panel (from rear door).

    Mount a phone jack with a RJ11 connector above or to the right of the Buchanan terminal block.

Wire the phone jack to the Buchanan and to the Terminal Block (TB0) in accordance with Figure 925-2.

A manual jack shall be installed inside the cabinet. The jack shall intermate with a three circuit 1/4 inch (6.35 mm) diameter phone plug. The tip and ring (middle) circuits of the jack shall-be connected to the logic ground and the interval advance inputs of controller unit. When the manual hand cord is plugged into the jack and the pushbutton is pressed, logic ground shall be connected to the interval advance input of the controller unit.

A Manual ON- OFF Switch shall be provided on the police panel which grounds the Manual Control Enable (C1 Pin 53) input to the controller whenever the switch is in the ON position and advance input (C1 Pin 80).

A manual pushbutton with cord shall be provided. The cord shall have a minimum length of 6 feet (1.8 m). It shall have a 1/4 inch (6.35 mm) diameter, three circuit plug connected to one end and a manual pushbutton enclosed in a hand held enclosure at the other end. A complete cycle (push-release) of the manual pushbutton shall terminate the controller unit interval which is active except the vehicular yellow and all red clearance intervals. Cycling the push-button during the vehicular yellow or all red clearance intervals shall not terminate the timing of those intervals.

21. Cabinet Model 332A with Auxiliary Output File)

    Ensure that this unit meets the requirements of Subsection 925.2.04.A.20 above, except that the cabinet is configured with an Auxiliary Output File. Additionally, the field wiring terminals may be mounted on the rear of the input file.

22. Cabinet Model 336S (Base Mount)

    This unit meets the CALTRANS Specification with the addition of approximately 6 additional inches (150 mm) of cabinet height exclusive of the "M" base adapter. Configure the internal component layout so that the additional space is available in the bottom area of the cabinet cage. Ensure that the field wiring input panels and surge protection conform to Table 925-6 Model 336S Default Input File Assignment Detail and Table 925-7 Required Surge Arrestors for Model 336S Cabinet.

    Ensure that the C1 connector harness is provided with pins for all 104 inputs and outputs from the controller.

    A manual jack shall be installed on the police panel. The jack shall intermate with a three circuit 1/4 inch (6.35 mm) diameter phone plug. The tip and ring (middle) circuits of the jack shall-be connected to the logic ground and the interval advance inputs of controller unit. When the manual hand cord is plugged into the jack and the pushbutton is pressed, logic ground shall be connected to the interval advance input of the controller unit.

    A Manual ON- Off Switch shall be provided on the police panel which grounds the Manual Control Enable (C1 Pin 53) input to the controller whenever the switch is in the ON position

    A manual pushbutton with cord shall be provided. The cord shall have a minimum length of 3 feet (0.9 m). It shall have a 1/4 inch (6.35 mm) diameter, three circuit plug connected to one end and a manual pushbutton enclosed in a hand held enclosure at the other end. A complete cycle (push-release) of the manual pushbutton shall terminate the controller unit interval which is active except the vehicular yellow and all red clearance intervals. Cycling the push-button during the vehicular yellow or all red clearance intervals shall not terminate the timing of those intervals.

23. Cabinet Model 336S (Pole Mount)

    Ensure that this unit meets the requirements of Subsection 925.2.04.A.22 above, except that the cabinet is configured for pole mounting as specified in the General Requirements for Type 170 Cabinet Assemblies.

24. Cabinet Model 336S (Base Mount with Auxiliary Output File)

    Ensure that this unit meets the requirements of Subsection 925.2.04.A.22 above, except that the cabinet is configured with an Auxiliary Output File. Additionally, the field wiring terminals may be mounted on the rear of the input file.

25. Cabinet Model 337

    The Model 337 cabinet is a compact cabinet with an output capacity of four vehicle phases plus two pedestrian phases; the dimensions not to exceed 17 inches (425 mm) deep x 20 inches (500 mm) wide x 35 inches (875 mm) high and its shipping weight not to exceed 175 pounds (80 kg).

    Supply the cabinet assembly with capacity for 11, two-channel slots in the input file.

    Ensure that the pin assignments of the C1 connector are compatible with the 2070 controller as applicable according to the required number of input/outputs.

    Ensure that the 337 cabinet uses standard Type 170 input and output file units.

    Equip the cabinet with a C2 connector harness with field terminals protected with surge protectors for communication inputs as specified under communications inputs.

Ensure that the cabinet has two full-size doors to allow complete access from the front or back of the cabinet. Design the rack assembly to mount in CALTRANS standard rails to allow for a Model 204 flasher.

Provide a receptacle to accept the plug in power distribution assembly card guides and edge connectors for the input file card guides to support the conflict monitor, and load switches and flash transfer relays.

Due to the compact design of this cabinet assembly, the Department of Transportation may accept a non-standard type of power distribution assembly (PDA).

26. Cabinet Model 334 with Auxiliary Output File for Ramp Metering Operations

The Controller Cabinet shall comply with the CALTRANS Traffic Signal Equipment Specifications (1989), Model 334 Cabinet Specifications (Chapter 6). **DO NOT** use the February 1993 Amendments for Specifications for the Model 334C Cabinet. Do use the Specification Clarifications dated December 20, 1993.

Provide Cabinet configured as shown in Figure 925-1.

Provide Detector Test Switch Panel. Before providing cabinet submit Detector Switch Test panel design and mounting location for approval. Panel shall include one switch for each of the 13 detector inputs.

a. The Detector Test Switch Panel shall be mounted in the cabinet on the rails. The panel shall be fabricated from brushed aluminum.

b. Each switch will be labelled as to function. The label shall be silkcreened on the test panel and be at least ¼ inch in height.

c. A three position switch shall be provided for each detector input. The switch shall function as follows:

- Down (Momentary) - Call is placed into the controller on the appropriate input in parallel with field input
- Up (Lock) – Call is placed into the controller on the appropriate input in parallel with field input.
- Center (Lock)– Normal Operation field output of detector is connected to the controller unit.

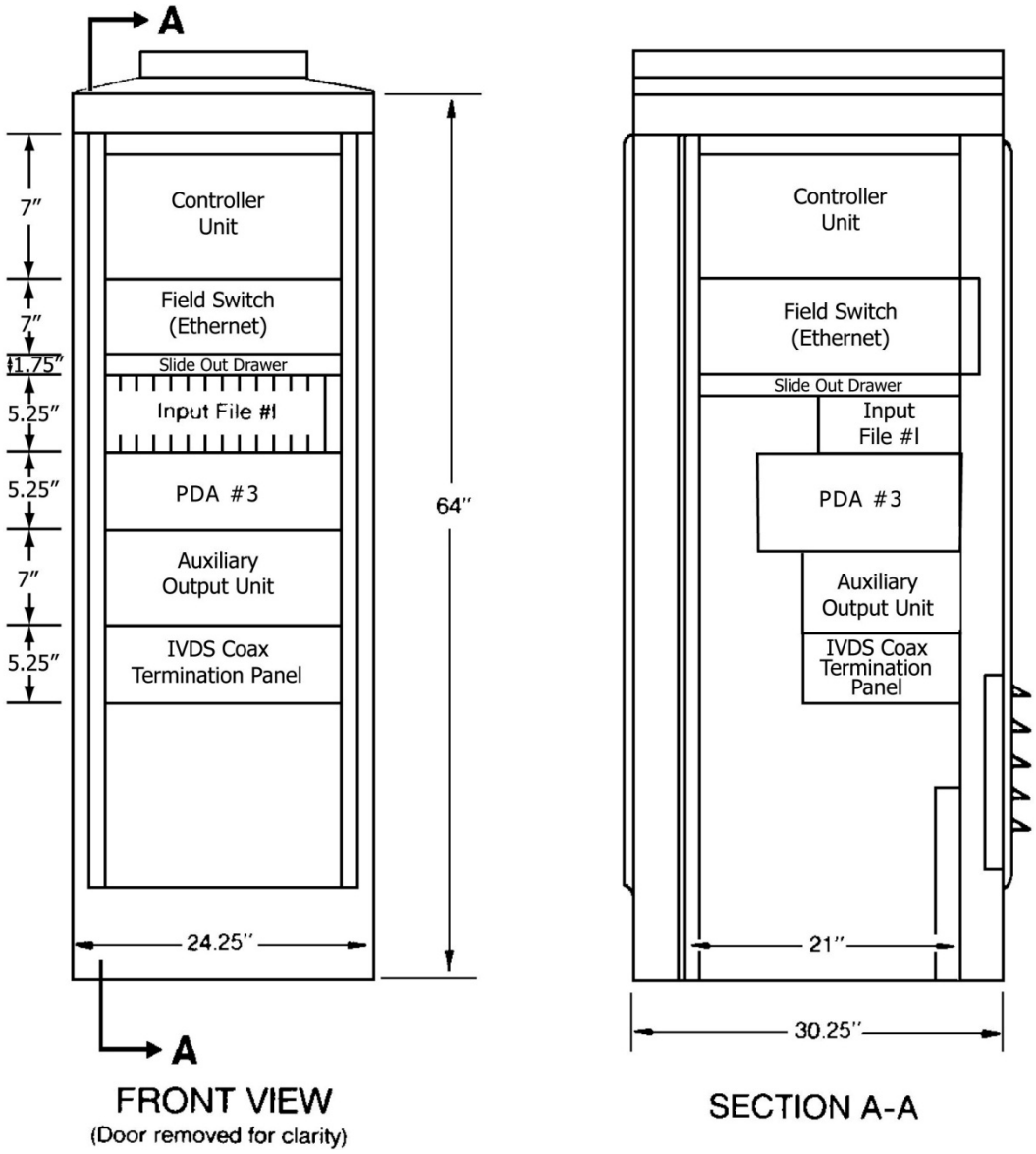

Figure 925-1 Typical 334 Cabinet Configuration

B. Fabrication

Refer to Subsection 925.2.06.A.1 for controller cabinet minimum fabrication Specifications.

C. Acceptance

Refer to Subsection 925.2.01.A for compliance with CALTRANS QPL.

D. Materials Warranty

Refer Subsection 925.2.01.D for Materials Warranties.

Table 925 – 4 Model 332 Default Input Files Assignment Detail

Upper Input File (I)	**Slot**		**1**	**2**	**3**	**4**	**5**	**6**	**7**	**8**	**9**	**10**	**11**	**12**	**13**	**14**
	Type		**Det**	**Det**	**Det**	**Det**	**Det**	**Det**	**Det**	**Det**	**Det**			**DC**	**DC**	**DC**
	Channel 1	**C1 Pin**	56	39	63	47	58	41	65	49	60		80	67	68	81
		Function	Ph1	Ph2	Ph2	Ph2 CALL	Ph3	Ph4	Ph4	Ph4 CALL	Ph1		INT ADV	Ph2 PED	Ph6 PED	FLASH
		Field Term	TB-2 1,2	TB-2 5,6	TB-2 9,10	TB-4 1,2	TB-4 5,6	TB-4 9,10	TB-6 1,2	TB-6 5,6	TB- 6 9,10		NC	TB- 8 4,6	TB- 8 7,9	NC
	Channel 2	**C1 Pin**	56	43	76	47	58	45	78	49	62		53	69	70	82
		Function	Ph1	Ph2	Ph2	Ph2 CALL	Ph3	Ph4	Ph4	Ph4 CALL	Ph3		MCE	Ph4 PED	Ph8 PED	STOP TIME
		Field Term	TB-2 3,4	TB-2 7,8	TB-2 11,12	TB-4 3,4	TB-4 7,8	TB-4 11,12	TB-6 3,4	TB-6 7,8	TB-6 11,12		NC	TB-8 5,6	TB-8 8,9	NC
Lower Input File (J)	**Slot**		**1**	**2**	**3**	**4**	**5**	**6**	**7**	**8**	**9**	**10**	**11**	**12**	**13**	**14**
	Type		**Det**	**Det**	**Det**	**Det**	**Det**	**Det**	**Det**	**Det**	**Det**			**TBA**	**TBA**	**DC**
	Channel 1	**C1 Pin**	55	40	64	48	57	42	66	50	59		54	71	72	51
		Function	Ph5	Ph6	Ph6	Ph6 CALL	Ph7	Ph8	Ph8	Ph8 CALL	Ph5			EVA	EVB	R/R
		Field Term	TB-3 1,2	TB-3 5,6	TB-3 9,10	TB-5 1,2	TB-5 5,6	TB-5 9,10	TB-7 1,2	TB-7 5,6	TB- 7 9,10			TB- 9 4,6	TB- 9 7,9	TB- 9 10,12
	Channel 2	**C1 Pin**	55	44	77	48	57	46	79	50	61		75	73	74	52
		Function	Ph5	Ph6	Ph6	Ph6 CALL	Ph7	Ph8	Ph8	Ph8 CALL	Ph7			EVC	EVD	
		Field Term	TB-3 3,4	TB-3 7,8	TB-3 11,12	TB-5 3,4	TB-5 7,8	TB-5 11,12	TB-7 3,4	TB-7 7,8	TB-7 11,12			TB-9 5,6	TB-9 8,9	TB- 9 11,12

Table 925-5 Required Surge Arrestors for Model 332 Cabinet

Field Terminal Block	**Terminals**	**Required Arrestor**
TB-8	1-12	Section 925.2.04.A.13.f
TB-9	10-12	Section 925.2.04.A.13.f
TB-9	4-9	Terminal Block only Section 925.2.04.A.13.f
TB-2, TB-3, TB-4, TB-5, TB-6, TB-7	1-12	Section 925.2.04.A.13.c

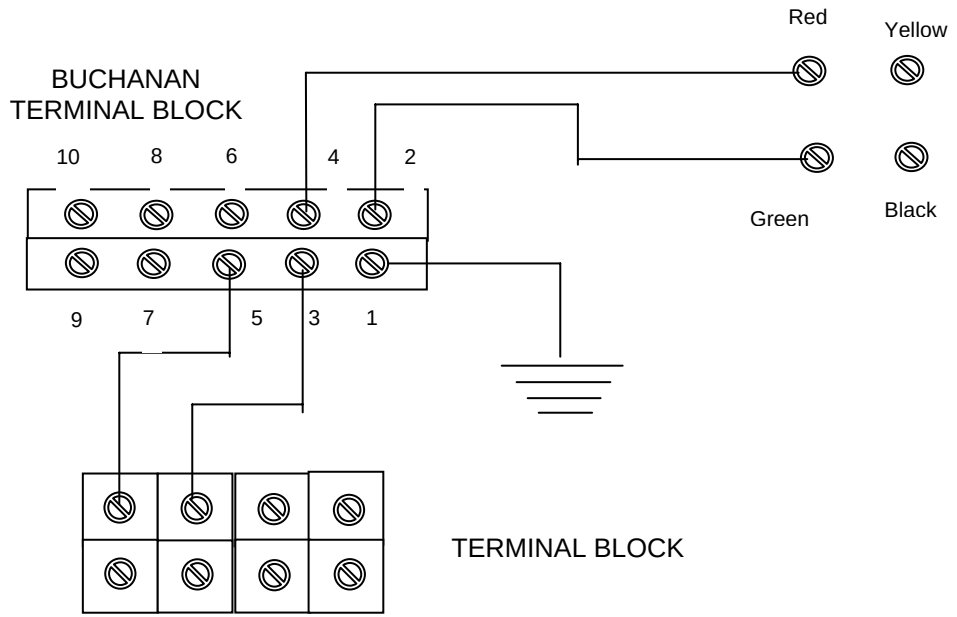

Note: For a typical signal installation, the Model 332 cabinet is the design standard.

Figure 925-2—Wiring Diagram for Dial-up Communications

Table 925-6 Model 336S Default Input File Assignment Detail

Slot		1	2	3	4	5	6	7	8	9	10	11	12	13	14
Type		**Det**	**Det**	**Det**	**Det**	**Det**	**Det**	**Det**	**Det**	**DC**	**TBA**	**TBA**	**DC**	**DC**	**DC**
Channel 1	**C1 Pin**	56	39	58	41	55	40	57	42	51	71	72	67	68	81
	Function	Ph1	Ph2	Ph3	Ph4	Ph5	Ph6	Ph7	Ph8	SE1	EVA	EVB	Ph2 PED	Ph6 PED	FLASH
	Field Term	TB-7 1,2	TB-7 5,6	TB-7 9,10	TB-8 1,2	TB-8 5,6	TB-8 9,10	TB-9 1,2	TB-9 5,6	TB- 5 1,2	TB- 5 5,6	TB- 5 9,10	TB- 4 1,2	TB- 4 5,6	NC
Channel 2	**C1 Pin**	47	43	49	45	48	44	50	46	52	73	74	69	70	82
	Function	Ph2 CALL	Ph2	Ph4 CALL	Ph4	Ph6 CALL	Ph6	Ph8 CALL	Ph8	R/R	EVC	EVD	Ph4 PED	Ph8 PED	STOP TIME
	Field Term	TB-7 3,4	TB-7 7,8	TB-7 11,12	TB-8 3,4	TB-8 7,8	TB-8 11,12	TB-9 3,4	TB-9 7,8	TB-5 3,4	TB-5 7,8	TB-5 11,12	TB-4 3,4	TB-4 7,8	NC

Table 925-7 Required Surge Arrestors for Model 336S Cabinet

Field Terminal Block	Terminals	Required Arrestor
TB-4	1-12	Section 925.2.04.A.13.f
TB-5	1-4	Section 925.2.04.A.13.f
TB-5	5-12	Terminal Block only Section 925.2.04.A.13.f
TB-7, TB-8, TB-9	1-12	Section 925.2.04.A.13.c

Table 925-8 Model 334 Default Input File Assignment Detail

Slot		1	2	3	4	5	6	7	8	9	10	11	12	13	14
Type		**Det**	**Det**	**Det**	**Det**	**Det**	**Det**	**Det**	**Det**	**Det**	**Det**	**Det**	**TBA**	**TBA**	**TBA**
Channel 1	**C1 Pin**	46	50	49	55	51	57	59	61	81	79	53	41	43	45
	Function	L1 D1	L2 D2	L1 Q1	L3 Q3	L1 MLA	L2 MLA	L3 MLA	L4 MLA		L3 D3				
	Field Term	TB-2 1,2	TB-2 5,6	TB-2 9,10	TB-3 1,2	TB-3 5,6	TB-3 9,10	TB-4 1,2	TB-4 5,6	TB-4 9,10	TB-5 1,2	TB-5 5,6	TB-5 9,10	TB-6 1,2	TB-6 5,6
Channel 2	**C1 Pin**	39	47	48	56	52	58	60	62	80	82	54	40	42	44
	Function	L1 P1	L2 P2	L2 Q2		L1 MLB	L2 MLB	L3 MLB	L4 MLB		L3 P3				
	Field Term	TB-2 3,4	TB-2 7,8	TB-2 11,12	TB-3 3,4	TB-3 7,8	TB-3 11,12	TB-4 3,4	TB-4 7,8	TB-4 11,12	TB-5 3,4	TB-5 7,8	TB-5 11,12	TB-6 3,4	TB-6 7,8

Table 925-9 Required Surge Arrestors for Model 334 Cabinet		
Field Terminal Block	**Terminals**	**Required Arrestor**
TB-2, TB-3, TB-4	1-12	Section 925.2.04.A.13.c
TB-5	1-4	Section 925.2.04.A.13.c

Table 925 - 10 Model 334 PDA Type 3 Output File															
	SP 1					**SP 2**					**SP 3**				
	C1 Pin	**Out #**	**Conn**	**Func**	**Field Term**	**C1 Pin**	**Out #**	**Conn**	**Func**	**Field Term**	**C1 Pin**	**Out #**	**Conn**	**Func**	**Field Term**
SP R	2	0	C6-1	Warn 1	T4-7	4	2	C6-3	Lane 1 R	T4-4	7	5	C6-6	Lane 2 R	T4-1
SP Y	37	34	C6-9		T4-8	5	3	C6-4	Lane 1 Y	T4-5	8	6	C6-7	Lane 2 Y	T4-2
SP G	3	1	C6-2	Warn 2	T4-9	6	4	C6-5	Lane 1 G	T4-6	9	7	C6-8	Lane 2 G	T4-3

Table 925 - 11 Model 334 Auxiliary Output File															
	SP 9					**SP 10**					**SP 11**				
	C1 Pin	**Out #**	**Conn**	**Func**	**Field Term**	**C1 Pin**	**Out #**	**Conn**	**Func**	**Field Term**	**C1 Pin**	**Out #**	**Conn**	**Func**	**Field Term**
SP R	97	53	C5-14	Lane 3 R	A124	94	50	C5-11	Not used	A121	91	48	C5-9	Not used	A114
SP Y	98	54	C5-15	Lane 3 Y	A125	95	51	C5-12	Not used	A122	101	37	C5-18	Not used	A115
SP G	99	55	C5-16	Lane 3 G	A126	96	52	C5-13	Not used	A123	93	49	C5-10	Not used	A116
	SP 12					**SP 13**					**SP 14**				
	C1 Pin	**Out #**	**Conn**	**Func**	**Field Term**	**C1 Pin**	**Out #**	**Conn**	**Func**	**Field Term**	**C1 Pin**	**Out #**	**Conn**	**Func**	**Field Term**
SP R	88	45	C5-6	Not used	A111	85	42	C5-3	Not used	A104	83	40	C5-1	Not used	A101
SP Y	89	46	C5-7	Not used	A112	86	43	C5-4	Not used	A105	100	36	C5-17	Not used	A102
SP G	90	47	C5-8	Not used	A113	87	44	C5-5	Not used	A106	84	41	C5-2	Not used	A103

925.2.05 Type ITS Cabinet Assemblies

A. Requirements

Ensure that the cabinet assembly meets the requirements of the CALTRANS Specifications as described in this document. In addition to the CALTRANS Specifications, ensure that the cabinet assembly conforms to the requirements listed below, which take precedence over conflicting CALTRANS Specifications.

1. Cabinet configuration:

   Supply cabinets in accordance with the following information and table 925-12.

   a. Cabinet Traffic Signal Application - Series 340
      - 340 - 4 Door Cabinet with “P” Base Ground Mount
      - 342 - 2 Door Cabinet with “170” Base (332) Ground Mount
      - 346 - 2 Door Cabinet with ”170” Base (336S), Adaptor Mount

   b. Cabinet Traffic Management Application - Series 350
      - 354 - 2 Door Cabinet with “170” Base (332) Ground Mount
      - 356 - 2 Door Cabinet with “170” Base (336S) Adaptor Mount

Table 925-12 ITS Cabinet Configurations

Items	ITS Cabinet Versions				
	340	342	346	354	356
	Qty	Qty	Qty	Qty	Qty
Housing # 1/ Cage #1		1		1	
Housing # 2/Cage #2			1		1
Housing #3/Two Cage #1	1				
“J” Panel Cage #1	4	2		2	
“J” Panel Cage #2			2		2
Service Panel Assembly with AC -/EG Bus	1	1	1	1	1
Raw/Clean AC power Assembly	1	1	1	1	1
Raw Clean AC power Extension	1				
AC Clean Module Assembly	1				
DC Power/Comm Assembly	2	1	1	1	1
DC Power/Comm Extension	2	1		1	1
Cabinet Shelf Assembly	2	1	1	1	1
Input Assembly	3	2	1	1	1
Six Pack Output Assembly	1			1	1
Fourteen Pack output Assembly	1	1	1		
PDA ITS Assembly	1	1	1	1	1
Control/Serial Bus harness	8	6	4	4	4
Serial Bus 3 Harness	3	1	1	1	1

Note: Input Assembly shall include a Model 218 SIU. Output Assembly shall include a Model 218 SIU, Model 214 AMU and Model 205 Transfer Relays. The PDA ITS (Traffic Signal Application) shall include two Model 204 Flasher Units, Model 212 CMU and two Model 216 Power Supply Units and attached harnesses. The PDA ITS (Traffic Management System Application) shall include Model 212 CMU and two Model 216 Power Supply Units and attached harnesses.

c. Model 340 Cabinet:

   Field termination panels

   9 – Flash Transfer Relays

   2 – Model 204 Flashers

Specific Equipment Layout and other cabinet devices determined on a project specific basis

d. Model 342 Cabinet:
   1-Model 242 DC Isolator
   6- Flash Transfer Relays
   2-Model 204 Flashers

e. Model 346 Cabinet
   1-Model 242 DC Isolator
   6-Flash Transfer Relays
   2-Model 204 Flasher
   1-"M" Base Adapter installed (Base Mount Cabinets Only)
   1-Aluminum Cover Plate for Cabinet Bottom (Pole Mount Cabinets Only)

f. Model 354 Cabinet:
   Specific Equipment Layout and additional cabinet equipment determined on a project specific basis.

g. Model 356 Cabinet
   Specific Equipment Layout and additional cabinet equipment determined on a project specific basis.
   1-"M" Base Adapter installed (Base Mount Cabinets Only)
   1-Aluminum Cover Plate for Cabinet Bottom (Pole Mount Cabinets Only)

Note: Include above components in cabinet at time of delivery.

Other auxiliary cabinet components such as controllers, load switches, etc. will be ordered as separate items.

2. Finish

   Use cabinets that have a bare aluminum finish (see Subsection 925.2.06.A.1 for controller-cabinet minimum fabrication specifications).

3. Locks

   Equip the main cabinet door with locks that accept No. 2 Corbin keys. Provide two sets of keys with each cabinet. One set of keys is defined as one – No. 2 key and one - police panel key.

4. Power

   Equip the cabinet assemblies with an ITS power distribution assembly to generate AC and DC power for the electronic components, except the DC power for the controller units.

5. Mounting

   Equip the cabinets for pole or base mounting, as specified in the Plans.

   a. Base Mount
      Supply Model 346 and 356 cabinets, when specified as base mount, with a “M” base-mounting adapter installed.

   b. Pole Mount
      Supply Model 346 and 356 cabinets, when specified as pole mount, with two exterior pole mounting brackets that allow for mounting on steel, concrete, and timber poles.

      Ensure that the bracket mounting holes are properly reinforced with metal plates of adequate size and strength, welded longitudinally across the inside depth of the cabinet.

      Ensure that the exterior-mounting bracket is shipped installed on the cabinet housing. Additionally, provide an aluminum plate, which covers the bottom cabinet opening.

6. Cabinet Light

   Include in each cabinet one fluorescent strip lighting fixture mounted inside the top front portion of the cabinet. Do not use a screw in type fluorescent lamp.

   The fixture includes a cool white lamp, covered, and operated by a normal power factor, UL listed ballast.

   Install a door-actuated switch to turn on the cabinet light when either door is opened.

7. Cabinet Interlock

   Do not install the interlock circuit, as detailed in the CALTRANS Specifications.

8. Cabinet Drawer

   Equip each Model 340, 342, 346, 352 and 356 cabinet with an aluminum storage compartment mounted in the rack assembly with the approximate following dimensions: 16 inches (400 mm) wide, 14 inches (350 mm) long, and 1.75 inches (44 mm) deep.

   Mount this compartment directly under the Type 2070 controller. Provide a drawer with telescoping drawer guides to allow full extension from the rack assembly.

   When extended, the storage compartment opens to provide storage space for cabinet documentation and other miscellaneous items.

   Ensure that the storage compartment be of adequate construction to support a weight of 25 pounds (12 kg) when extended.

   Provide a top for the storage compartment that has a non-slip plastic laminate attached, which covers a minimum of 90% of the surface area of the top.

9. Test Program

   Supply each cabinet with a diagnostic test program, which verifies the operation of the cabinet. Ensure that the program can test cabinet wiring related to the output file, input file, and police panel and flash switches. In addition, ensure that the program can check the operation of the SIU, AMU and CMU by generating all possible

   conflicts, in sequence,

10. Surge Protection

    Equip each cabinet with devices to protect the control equipment from surges and over voltages.

    Design the surge protector panels to allow for adequate space for a wire connection and surge protector replacement without the removal of terminal blocks or panels. Provide surge protectors for the input sections as detailed below and as shown in the Input Terminal and Surge Arrestor Detail.

    Supply surge protectors that meet the following Specifications.

    a. AC Service Input

       Include a surge protection unit for each cabinet on the AC service input that meets or exceeds the following requirements:

       - Provide a hybrid type power line surge protection device on a service panel which plugs into a 12 pin Beau Connector which mounts on a service panel.

         Install the protector between the applied line voltage and earth ground. Use a surge protector capable of reducing the effect of lightning transient voltages applied to the AC line that conforms to the following:

Peak surge current for an 8 x 20 µs waveform:	20,000A for 20 occurrences
Clamp voltage @ 20,000A	280V max
Maximum continuous operating current:	@ 120V / 60 Hz 10A
Series Inductance:	AC Line/AC Neutral - 200 microhenries
Response time:	Voltage never exceeds 280V during surge
Spike suppression for +/- 700 V spike:	+/- 40 V deviation from sine wave at all phases angles between 0 and 180 degrees.

       - Provide a protector with the following terminals:
         - Main Line (AC line first stage terminal)
         - Main Neutral (AC neutral input terminal)
         - Equipment Line In (AC line second stage input terminal, 10A)
         - Equipment Line Out (AC line second stage output terminal, 10A)
         - Equipment neutral out (neutral terminal to protected equipment)
         - GND (Earth connection)
       - Supply a protector that is epoxy encapsulated in a flame-retardant material.
       - Configure the Equipment Line Out to provide power to the Type 2070 and to the 24 V power supply.

b. Inductive Loop Detector Inputs

Protect each inductive loop detector channel input by an external surge protection device that meets or exceeds the following requirements:

- A three-terminal device, two (2) of which are connected across the signal inputs of the detector with the third connected to the chassis ground to protect against common mode damage.
- Instantly clamps differential mode surges (induced voltage across the loop detector input terminals) via a semiconductor array. The array appears as a low capacitance to the detector.
- Clamps common mode surges (induced voltage between the loop leads and ground) via solid state clamping devices.
- Withstand 25-100A surge current occurrences of a 10 x 700 µs waveform.
- Have the following clamp characteristics:

Maximum break over voltage:	170 V
Maximum on-stage clamping voltage:	3V
Response Time:	<5 ns
Off-stage leakage current:	<10 µA
Capacitance:	less than 220 pf

- Ensure that the unit also meets the following minimum requirements:

Peak surge current:	6 times
Differential mode:	400 A (8 x 20 ms)
Common mode:	1,000 A (8 x 20 ms)
Estimated occurrences:	500 @ 200 A
Response time:	40 ns
Input capacitance:	35 pF typical
Temperature:	-40° F to +185° F (-40º C to 85º C)
Mounting:	No. 10-32 x 3/8-inch (No. 5 x 10 mm) bolt
Clamp voltage	
@400 A diff. Mode:	30 V max.
@1,000 A comm. Mode:	30 V max.

c. Signal Load Switches (Switchpacks)

Provide the output of the switchpack in the output file with transient protection via the nine position transient protection device in the output file. Protect switchpacks from surges on the AC output lines.

Ensure that the transient protectors meet or exceed these requirements:

- Steady state sinusoidal voltage (RMS) rating at 50 to 60 Hz of at least 150 V at 77 ºF (25 °C)
- Steady state applied DC voltage rating of at least 200 V at 77 ºF (25 °C)
- Transient energy rating is of at least 80 J for a single impulse of 10/1,000 µs current waveform at 77 ºF (25 °C)
- Peak current rating of 6,500 A for a single impulse of 8/20 µs waveform with the rated continuous voltage applied
- Varistor voltage of at least 212 V at 1.0mA of DC current applied for the duration of 20 µs to 5s
- Clamping voltage of at least 395 V with an applied 8/20 µs impulse of 100 A
- Typical capacitance at a frequency of 0.1 to 1.0 MHz of 1600 pF
- Two-terminal device, one of which is connected to the AC output of the signal load switch on the output file terminals (backside of the field terminals) with the other connected to AC neutral

d. Communication Inputs

Protect low voltage communications input as it enters the cabinet with a solid-state surge protection unit that meets or exceeds these requirements:

- Dual pair (4-wire) module with a printed circuit board connector, double sided and gold plated for reliability
- Ability to mate with and be installed in a 10-circuit Buchanan connector Part Number PCBIB10S or Tyco Part Number 2-1437410-3 or equivalent
- Usable as two independent signal pairs
- The data circuits pass through the protection in a serial fashion
- C2 connector of the 2070 controller that terminates on the line side of the unit
- Communication field wires for this local side that terminate on the line side of the unit
- Ground terminals connected to power ground
- Ensure that the unit meets the following minimum requirements:

Peak surge current:	10 kA (8 x 20 µs wave shape)
	500A (10 x 700 µs wave shape)
Occurrences @ peak:	50 typical
Response time:	<1ns
Voltage Clamp:	8V line to line
Series Resistance:	24 Ω total
Temperature	-40 °F (-40 °C) to +185 °F (85 °F)
Primary protector:	3 element gas tube 5kA, (8 x 20µs wave shape), per side
Secondary protector:	Silicon avalance, 1.5 kW minimum

e. Low Voltage DC Inputs

Provide an external surge protection device for each low voltage DC input channel which meets the same requirements as the communication inputs with the following exception of the Voltage clamp, which shall be 30 V line-to-line.

11. Type 212 ITS Cabinet Monitor Unit

a. Introduction

Supply each cabinet with Type 212 ITS Cabinet Monitor Unit (CMU). Ensure the Type 212 CMU meets the CALTRANS TEES Specifications and functions as a unit with the a Type 214 Auxiliary Monitor Unit to provide the following monitoring functions: Cabinet Power Supplies,; Conflicting Channel Monitor, Serial Bus1 and 3 Error; Message 62; Diagnostic Error; Multiple Channel Inputs; Lack of Signal Inputs; Yellow Clearance; Yellow plus Red Clearance; Police and Power Distribution Switch Monitor; door Switches and Main Contactor Status; Circuit Breakers; Flash Unit Output Status; and AC Line Level Sense. Ensure the Unit supplied is listed on the most recent California Department of Transportation Qualified Products List (QPL).

b. Configuration

Supply Type 212 CMU capable of monitoring up to 28 physical load switch channels (RYG) plus 4 virtual channels for a total of 32 channels.

c. Programming

Ensure complete programming of the Type 212 CMU is by an interchangeable Datakey nonvolatile memory device. The Datakey shall store all of the configuration parameters. Ensure the programming of the datakey can easily be accomplished by a PC and provide datakey and programming device with the delivery of the first unit ordered. Orders of multiple ITS cabinets require delivery or 1 programming device with PC software for every 10 cabinets.

d. Logging

Ensure the Type 212 CMU maintains a non volatile event log recording. The complete intersection status as well as previous fault events, AC Line events, configuration changes, monitor resets, cabinet temperature and true RMS voltages for all field inputs. A real time clock time shall stamp each log event with the time and date.

Ensure a Signal Sequence History Log is stored in nonvolatile memory. The information stored in the signal sequence log shall provide graphic displays of up to 30 seconds of signal status prior to the fault trigger event with 50 ms resolution.

The Type 212 CMU shall be provided with PC Software that allows a review of status, event log review and archival.

12. Type 214 ITS Auxiliary Monitor Unit
    a. Introduction
       Supply each ITS cabinet output assembly with a Type 214 ITS Auxiliary Monitor Unit (AMU). Ensure the Type 214 CMU meets the CALTRANS TEES Specifications and functions with the a Type 212 Cabinet Monitor Unit to provide cabinet monitoring functions to perform the following monitoring functions: Cabinet Power Supplies, Conflicting Channel Monitor, Serial Bus 1 and 3 Error; Message 62; Diagnostic Error; Multiple Channel Inputs; Lack of Signal Inputs; Yellow Clearance; Yellow plus Red Clearance; Police and Power Distribution Switch Monitor; door Switches and Main Contactor Status; Circuit Breakers; Flash Unit Output Status; and AC Line Level Sense. Ensure the Unit supplied is listed on the most recent California Department of Transportation Qualified Products List (QPL). The Type 214 AMU shall provide the field signal sensing.
    b. Current Monitoring
       Supply Type 214 AMU capable of operating in a 14 channel mode or a 6 channel mode. Ensure the address select is correct for the output assembly in which the Model 214 AMU is installed.
    c. Diagnostics
       Ensure the Type 214 AMU has self diagnostic tests that execute continuously to provide for correct operation to properly monitor the current for use with LED signal heads.
13. Type 218 ITS Serial Interface Unit
    a. Introduction
       Supply each input and output assembly with a Type 218 ITS Serial Interface Unit (SIU). Ensure the Type 218 ITS SIU supplied meets the CALTRANS TEES Specifications. Ensure the Unit supplied is listed on the most recent California Department of Transportation Qualified Products List (QPL). The Type 218 ITS SIU shall provide the interface between the 2070 controller and the input and output files.
    b. Configuration
       Supply Type 218 SIU capable of operating in all input and output modes. Provide a Model 218 SIU that is configured correctly for the input or output file for which it is supplied.
    c. Programming
       Ensure programming of the Type 218 SIU is programmed by assembly mounted address jumpers and that no other setup is required.
    d. Diagnostics
       Ensure the Type 218 SIU supplied has a complete set of internal diagnostics self-tests run continuously to monitor critical components of the unit. Provide unit with a front panel LED indicator that can be used to report the current Input/Output assembly address assignment of the unit for cabinet configuration verification. Ensure unite has a diagnostic EIA-232 port on the front panel to interface with the SIU 218 functions.
14. Model 242 DC Isolator

    Provide Model 242 DC Isolators that are in accordance with the latest version of CALTRANS Specifications as referenced earlier in this section. Provide isolators that:

    - Allow 242 isolator input signal polarity to easily be inverted without the use of tools. Acceptable methods are removable jumpers or dip switches. Unacceptable methods are soldering or desoldering a diode or resistor.
    - Output is OFF for input voltages greater than 12 volts;
    - Output is ON for voltages of less than 8 volts that have a duration of at least 5 to 25 ms (optional 2-7 ms);
    - Minimum output pulse width is 100 ms with a valid input (can be disabled);
    - Output is optically isolated open collector NPN transistor;
    - Capable of sinking 50 ma when on;
    - Can register a new input within 25 ms of the old signal going away; and
    - Output clamped on power up and down
15. Model 200 Switchpack

    Provide Model 200 Switchpacks that are in accordance with the latest version of CALTRANS Specifications as referenced earlier in this section.

16. Model 204 Flasher Unit

    Provide Model 204 Flasher Units that are in accordance with the latest version of CALTRANS Specifications as referenced earlier in this section.

17. Flash Transfer Relay

    Provide Flash Transfer Relays that are in accordance with the latest version of CALTRANS Specifications as referenced earlier in this section.

18. Cabinet Model 342

    Provide Cabinet Model 342 that meets the CALTRANS Specification with the addition of surge protection as detailed in Table 925-13 Model 342 ITS Cabinet Default Input Files Assignment Detail, Table 925-14 Required Surge Arrestors for Model 342 ITS Cabinet, and Table 925-15 Model 342 & 346 ITS Cabinet Default Output File Assignment Detail.

    Supply Model 342 with lower input panel cabinets, with housing Type 1, and all components as described in these Specifications.

    Supply cabinets having two input files which conform to the CALTRANS Specifications and configured to accept two 2070 controllers in the top portion of the cabinet.

    Configure the cabinet for dial up communications. Mount a two (2) circuit Buchanan connector on the right side panel (from rear door).

    Mount a phone jack with a RJ11 connector above or to the right of the Buchanan terminal block.

    Wire the phone jack to the Buchanan and to the Terminal Block (TB0) in accordance with Figure 925-3.

19. Cabinet Model 346 (Base Mount)

    This unit meets the CALTRANS Specification with the addition of approximately 6 additional inches (150 mm) of cabinet height exclusive of the "M" base adapter. Configure the internal component layout so that the additional space is available in the bottom area of the cabinet cage. Ensure that the field wiring input panels and surge protection conform to Table 925-16 Model 346 ITS Cabinet Default Input File Assignment Detail, Table 925-17 Required Surge Arrestors for Model 346 Cabinet, and Table 925-15 Model 342 & 346 Default ITS Cabinet Default Output File Assignment.

20. Cabinet Model 346 (Pole Mount)

    Ensure that this unit meets the requirements of Subsection 925.2.04.A.19 above, except that the cabinet is configured for pole mounting as specified in the General Requirements for Type ITS Cabinet Assemblies.

21. Cabinet Model 340

    The Model 340 cabinet configuration will be determined by the special provisions of the project.

    Ensure that the input and output port assignments are compatible with the 2070 controller as applicable according to the required number of input/outputs. Ensure that the 340 cabinet uses standard ITS cabinet input and output file units.

    Equip the cabinet with a C2 connector harness with field terminals protected with surge protectors for communication inputs as specified under communications inputs.

    Ensure that the cabinet has four full-size doors to allow complete access from the front or back of the cabinet. Design the rack assembly to mount in CALTRANS standard rails to allow for a Model 204 flasher.

    Provide a receptacle to accept the plug in power distribution assembly card guides and edge connectors for the input file card guides to support the conflict monitor, and load switches and flash transfer relays.

B. Fabrication

Refer to Subsection 925.2.07.A.1 for controller cabinet minimum fabrication Specifications.

C. Acceptance

Refer to Subsection 925.2.02.A for compliance with CALTRANS QPL.

D. Materials Warranty

Refer Subsection 925.2.01.D for Materials Warranties.

Table 925 – 13 Model 342 ITS Cabinet Default Input Files Assignment Detail

Input File	Chan	Item	File Slot 1	2	3	4	5	6	7	8	9	10	11	12
1	Upper	SIU Pin	A5	A6	A7	A8	A9	A10	A11	A12	A13	A14	A15	A16
		SIU Byte,Bit	2,6	3,0	3.2	3,4	3,6	4,0	4,2	4,4	4,6	5,0	5,2	5,4
		SIU Input #	7	9	11	13	15	17	19	21	23	25	27	29
		2070 Input #	17	0	28	8	22	6	43	25	51	32	12	38
		2070 Port	3.2	1.1	4.5	2.1	3.7	1.7	6.4	4.2	7.4	5.1	2.5	5.7
		Function	Ph 1 Det	Ph 2 Det	Ph 2 Det	Ph 2 Det	Ph 3 Det	Ph 4 Det	Ph 4 Det	Sp Det 1	Sp Det 5	Pd 2 Det	Pre 1	Pre 5
		Field Term	TB-2 1,2	TB-2 5,6	TB-2 9,10	TB-4 1,2	TB-4 5,6	TB-4 9,10	TB-6 1,2	TB-6 5,6	TB-6 9,10	TB-8 4,6	TB-9 10,12	TB-9 5,6
	Lower	SIU Pin	B5	B6	B7	B8	B9	B10	B11	B12	B13	B14	B15	B16
		SIU Byte,Bit	2,7	3,1	3,3	3,5	3,7	4.1	4,3	4,5	4,7	5,1	5,3	5,5
		SIU Input #	8	10	12	14	16	18	20	22	24	26	28	30
		2070 Input #	21	4	41	19	2	30	10	53	52	34	13	39
		2070 Port	3.6	1.5	6.2	3.4	1.3	4.7	2.3	7.6	7.5	5.3	2.6	5.8
		Function	Ph 1 Det	Ph 2 Det	Ph 2 Det	Ph 3 Det	Ph 4 Det	Ph 4 Det	Ph 4 Det	Sp Det 2	Sp Det 6	Pd 4 Det	Pre 2	Pre 6
		Field Term	TB-2 3,4	TB-2 7,8	TB-2 11,12	TB-4 3,4	TB-4 7,8	TB-4 11,12	TB-6 3,4	TB-6 3,4	TB-6 11,12	TB-8 5,6	TB-9 11,12	TB-9 8,9
	Opto Inputs	SIU Pin	B25	A26	B26	A27								
		SIU Byte,Bit	8,7	9,0	9,1	9,2								
		SIU Input #	Opto In 1	Opto In 2	Opto In 3	Opto In 4								
		2070 Input #	46	14	47	45								
		2070 Port	6.7	2.7	6.6	6.8								
		Function	Flsh Sen	MCE	Int Adv	S T								
2	Upper	SIU Pin	A5	A6	A7	A8	A9	A10	A11	A12	A13	A14	A15	A16
		SIU Byte,Bit	2,6	3,0	3.2	3,4	3,6	4,0	4,2	4,4	4,6	5,0	5,2	5,4
		SIU Input #	7	9	11	13	15	17	19	21	23	25	27	29
		2070 Input #	16	1	29	9	18	7	44	54	49	33	36	15
		2070 Port	3.1	1.2	4.6	2.2	3.3	1.8	6.5	7.7	7.2	5.2	5.5	2.8
		Function	Ph 5 Det	Ph 6 Det	Ph 6 Det	Ph 6 Det	Ph 7 Det	Ph 8 Det	Ph 8 Det	Sp Det 3	Sp Det 7	Pd 6 Det	Pre 3	Spare 1
		Field Term	TB-3 1,2	TB-3 5,6	TB-3 9,10	TB-5 1,2	TB-5 5,6	TB-5 9,10	TB-7 1,2	TB-7 5,6	TB-7 9,10	TB-8 7,9	TB-9 4,6	TB-8 1,3
	Lower	SIU Pin	B5	B6	B7	B8	B9	B10	B11	B12	B13	B14	B15	B16
		SIU Byte,Bit	2,7	3,1	3,3	3,5	3,7	4.1	4,3	4,5	4,7	5,1	5,3	5,5
		SIU Input #	8	10	12	14	16	18	20	22	24	26	28	30
		2070 Input #	20	5	42	18	3	31	11	55	50	35	37	40
		2070 Port	3.5	1.6	6.3	3.3	1.4	4.8	2.4	7.8	7.3	5.4	5.6	6.1
		Function	Ph 5 Det	Ph 6 Det	Ph 6 Det	Ph 7 Det	Ph 8 Det	Ph 8 Det	Ph 8 Det	Sp Det 4	Sp Det 8	Pd 8 Det	Pre 4	Spare 2
		Field Term	TB-3 3,4	TB-3 7,8	TB-3 11,12	TB-5 3,4	TB-5 7,8	TB-5 11,12	TB-7 3,4	TB-7 7,8	TB-7 11,12	TB-8-8,9	TB-9 7,9	TB-8 2,3
	Opto Inputs	SIU Pin	B25	A26	B26	A27								
		SIU Byte,Bit	8,7	9,0	9,1	9,2								
		SIU Input #	Opto In 1	Opto In 2	Opto In 3	Opto In 4								
		2070 Input #	NA	NA	NA	NA								
		2070 Port												
		Function												

Table 925 – 14 Required Surge Arrestors for Model 342 ITS Cabinet		
Field Terminal Block	**Terminals**	**Required Arrestors for Model 342 Cabinet**
TB - 8	1-12	Section 925.2.05.A.10.f
TB - 9	10-12	Section 925.2.05.A.10.f
TB - 9	4-9	Section 925.2.05.A.10.f
TB - 2, TB - 3, TB - 4, TB - 5, TB - 6, TB - 7	1-12	Section 925.2.05.A.10.c

Table 925 - 15 Model 342 & 346 ITS Cabinet Default Output File Assignment Detail

	Switch Pack													
Item	**1**	**2**	**3**	**4**	**5**	**6**	**7**	**8**	**9**	**10**	**11**	**12**	**13**	**14**
SIU Pin	A2	B3	A5	B6	A8	B9	A11	B12	A14	B15	A17	B18	A20	B21
SIU Byte, Bit	2,0	2,3	2,6	3,1	3,4	3,7	4,2	4,5	5,0	5,3	5,6	6,1	6,4	6,7
SIU Output #	1	4	7	10	13	16	19	22	25	28	31	34	37	40
2070 Output #	13	10	8	5	2	0	29	26	24	21	18	16	53	50
2070 Output Port	2.6	2.3	2.1	1.6	1.3	1.1	4.6	4.3	4.1	3.6	3.3	3.1	7.6	7.3
AMU Pin	C16	C17	C18	C19	C20	C21	C22	C23	C24	C25	C26	C27	C28	C29
AMU Channel	1	2	3	4	5	6	7	8	9	10	11	12	13	14
Field Term	TR-1 1,2	TR-2 1,2	TR-3 1,2	TR-4 1,2	TR-5 1,2	TR-6 1,2	TR-7 1,2	TR-8 1,2	TR-9 1,2	TR-10 1,2	TR-11 1,2	TR-12 1,2	TR-13 1,2	TR-14 1,2
Function	Ph 1 Rd	Ph 2 Rd	Pd 2 DW	Ph 3 Rd	Ph 4 Rd	Pd 4 DW	Ph 5 Rd	Ph 6 Rd	Pd 6 DW	Ph 7 Rd	Ph 8 Rd	Pd 8 DW	Ov A Rd	Ov B Rd
SIU Pin	B2	A4	B5	A7	B8	A10	B11	A13	B14	A16	B17	A19	B20	A22
SIU Byte, Bit	2,1	2,4	2,7	3,2	3,5	4,0	4,3	4,6	5,1	5,4	5,7	6,2	6,5	7,0
SIU Output #	2	5	8	11	14	17	20	23	26	29	32	35	38	41
2070 Output #	14	11	32	6	3	34	30	27	33	22	19	35	54	51
2070 Output Port	2.7	2.4	5.1	1.7	1.4	5.3	4.7	4.4	5.2	3.7	3.4	5.4	7.7	7.4
AMU Pin	B16	B17	B18	B19	B20	B21	B22	B23	B24	B25	B26	B27	B28	B29
AMU Channel	1	2	3	4	5	6	7	8	9	10	11	12	13	14
Field Term	TR-1 3,4	TR-2 3,4	TR-3 3,4	TR-4 3,4	TR-5 3,4	TR-6 3,4	TR-7 3,4	TR-8 3,4	TR-9 3,4	TR-10 3,4	TR-11 3,4	TR-12 3,4	TR-13 3,4	TR-14 3,4
Function	Ph 1 Yel	Ph 2 Yel	Pd 2 PC	Ph 3 Yel	Ph 4 Yel	Pd 4 PC	Ph 5 Yel	Ph 6 Yel	Pd 6 PC	Ph 7 Yel	Ph 8 Yel	Pd 8 PC	Ov A Yel	Ov B Yel
SIU Pin	A3	B4	A6	B7	A9	B10	A12	B13	A15	B16	A18	B19	A21	B22
SIU Byte, Bit	2,2	2,5	3,0	3,3	3,6	4,1	4,4	4,7	5,2	5,5	6,0	6,3	6,6	7,1
SIU Output #	3	6	9	12	15	18	21	24	27	30	33	36	39	42
2070 Output #	15	12	9	7	4	1	31	28	25	23	20	17	55	52
2070 Output Port	2.8	2.5	2.2	1.8	1.5	1.2	4.8	4.5	4.2	3.8	3.5	3.2	7.8	7.5
AMU Pin	A16	A17	A18	A19	A20	C21	C22	C23	A24	A25	A26	A27	A28	A29
AMU Channel	1	2	3	4	5	6	7	8	9	10	11	12	13	14
Field Term	TR-1 5,6	TR-2 5,6	TR-3 5,6	TR-4 5,6	TR-5 5,6	TR-6 5,6	TR-7 5,6	TR-8 5,6	TR-9 5,6	TR-10 5,6	TR-115,6	TR-12 5,6	TR-13 5,6	TR-14 5,6
Function	Ph 1 Grn	Ph 2 Grn	Pd 2 W	Ph 3 Grn	Ph 4 Grn	Pd 4 W	Ph 5 Grn	Ph 6 Grn	Pd 6 W	Ph 7 Grn	Ph 8 Grn	Pd 8 W	O A Grn	O B Grn

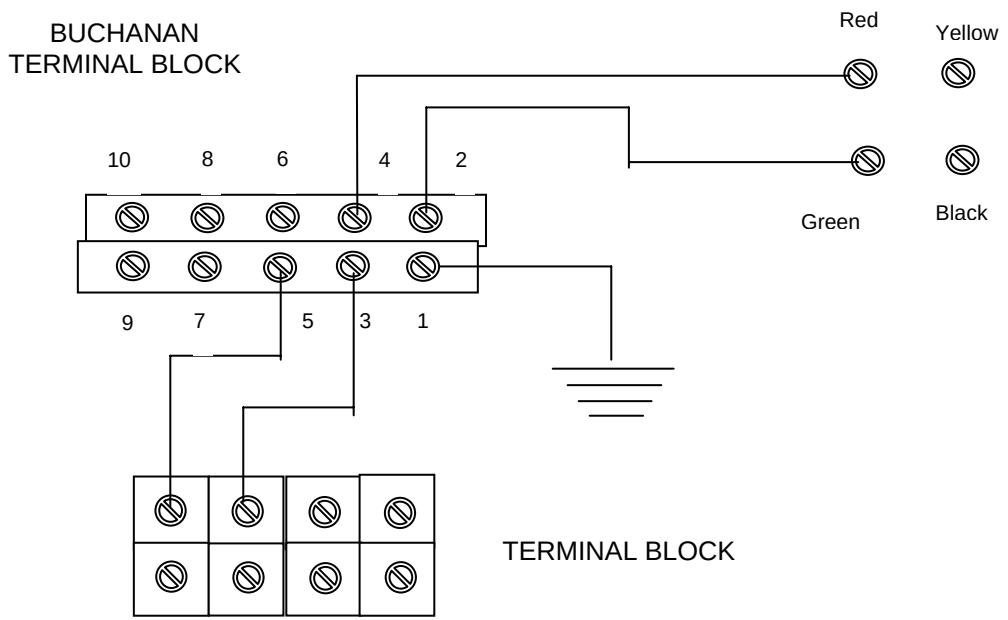

Note: For a typical signal installation, the Model 342 cabinet is the design standard.

Figure 925-3—Wiring Diagram for Dial-up Communications

Table 925 - 16 Model 346 ITS Cabinet Default Input Files Assignment Detail

Input File	Channel	Item	File Slot 1	2	3	4	5	6	7	8	9	10	11	12
1	Upper	SIU Pin	A5	A6	A7	A8	A9	A10	A11	A12	A13	A14	A15	A16
		SIU Port	2,6	3,0	3.2	3,4	3,6	4,0	4,2	4,4	4,6	5,0	5,2	5,4
		SIU In #	7	9	11	13	15	17	19	21	23	25	27	29
		2070 In #	17	0	19	2	16	1	18	3	12	36	32	33
		2070 Port	3.2	1.1	3.4	1.3	3.1	1.2	3.3	1.4	2.5	5.5	5.1	5.2
		Function	Ph 1 Det	Ph 2 Det	Ph 3 Det	Ph 4 Det	Ph 5 Det	Ph 6 Det	Ph 7 Det	Ph 8 Det	Pre 1	Pre 3	Pd 2 Det	Pd 6 Det
		Fld Term	T-7 1,2	T-7 5,6	T-7 9,10	T-8 1,2	T-8 5,6	T-8 9,10	T-9 1,2	T-9 5,6	T-5 1,2	T-5 5,6	T-4 1,2	T-4 5,6
	Lower	SIU Pin	B8	B9	B10	B11	B12	B13	B14	B15	B16	B17	B18	B19
		SIU Port	2,7	3,1	3,3	3,5	3,7	4.1	4,3	4,5	4,7	5,1	5,3	5,5
		SIU In #	8	10	12	14	16	18	20	22	24	26	28	30
		2070 In #	8	4	10	6	9	5	11	7	13	37	34	35
		2070 Port	2.1	1.5	2.3	1.7	2.2	1.6	2.4	1.8	2.6	5.6	5.3	5.4
		Function	Ph 2 Det	Ph 2 Det	Ph 4 Det	Ph 4 Det	Ph 5 Det	Ph 6 Det	Ph 7 Det	Ph 8 Det	Pre 2	Pre 4	Pd 4 Det	Pd 8 Det
		Fld Term	T-7 3,4	T-7 7,8	T-7 11,12	T-8 3,4	T-8 7,8	T-8 11,12	T-9 3,4	T-9 7,8	T-5 3,4	T-5 7,8	T-4 3,4	T-4 7,8
	Opto	SIU Pin	B25	A26	B26	A27								
		SIU Port	8,7	9,0	9,1	9,2								
		SIU In #	Opto In 1	Opto In 2	Opto In 3	Opto In 4								
		2070 In #	46	14	47	45								
		2070 Port	6.7	2.7	6.6	6.8								
		Function	Flsh Sen	MCE	Int Adv	S T								

Table 925 – 17 Required Surge Arrestors for Model 346 ITS Cabinet

Field Terminal Block	Terminals	Required Arrestors for Model 346 Cabinet
TB – 4	1-12	Section 925.2.05.A.10.f
TB - 5	1-4	Section 925.2.05.A.10.f
TB - 5	5-12	TERMINAL BLOCK Only Section 925.2.05.A.10.f
TB - 7, TB - 8, TB – 9	1-12	Section 925.2.05.A.10.c

925.2.06 Battery Backup System

A. Requirements

This specification is for establishing the minimum requirements for a complete emergency battery backup system for use with Light Emitting Diode Traffic Signal Modules at intersections with 332 cabinets. The Battery Backup System (BBS) shall include, but not be limited to the following: Inverter/Charger, Power Transfer Relay, Batteries, a separate manually operated non-electric Bypass Switch and all necessary hardware and interconnect wiring. The BBS shall be capable of providing power for full run-time operation for an "LED –only" intersection (all colors: red, yellow, green and pedestrian heads) or flashing mode operation and intersection Red LED's. The BBS shall be designed for outdoor applications, in accordance with the CALTRANS TEES.

Figure 925-4 Battery Backup Block Diagram

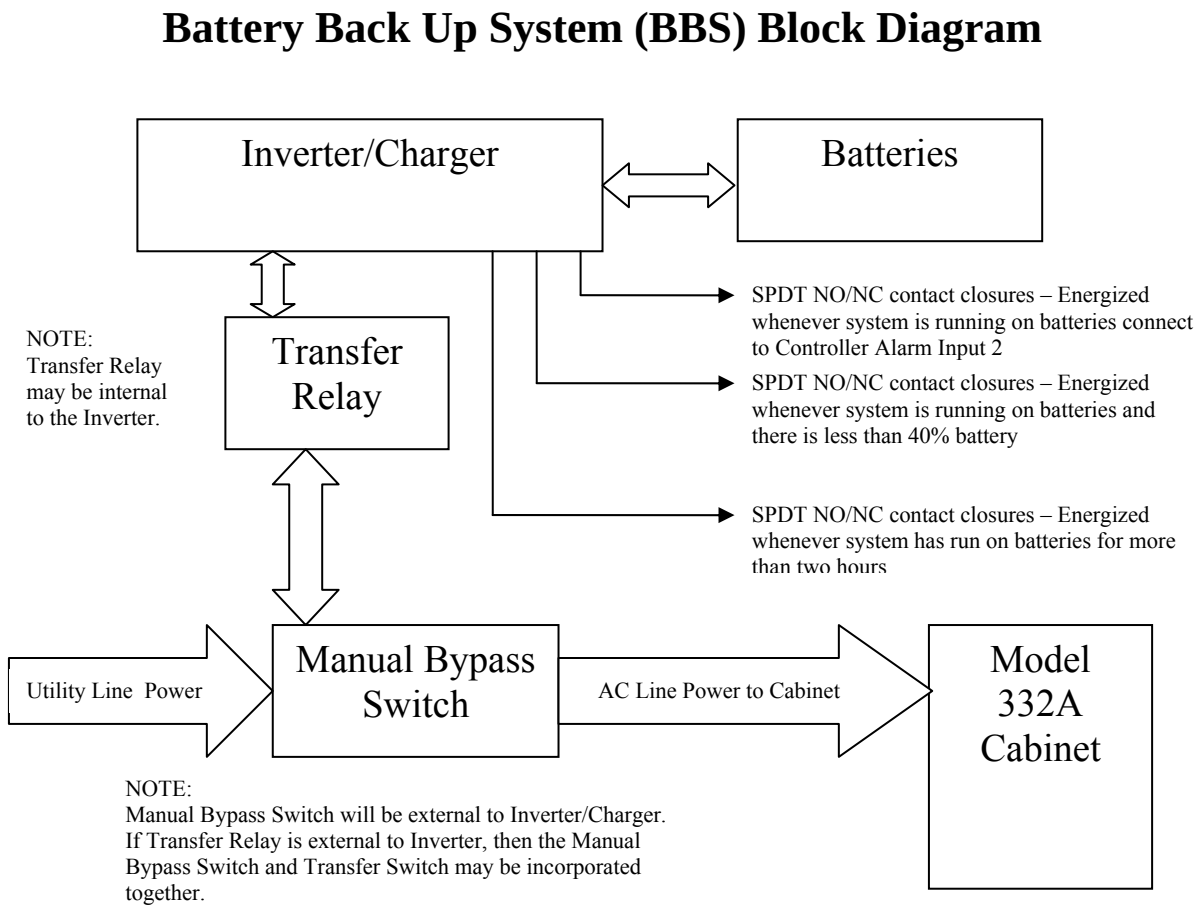

1. Operation:
   a. The BBS shall provide a minimum two (2) hours of full run-time operation for an "LED-only" intersection (minimum 700W/1000VA active output capacity, with 80% minimum inverter efficiency).
   b. The maximum transfer time allowed, from disruption of normal utility line voltage to stabilized inverter line voltage from batteries, shall be 65 milliseconds. The same maximum allowable transfer time shall also apply when switching from inverter line voltage to utility line voltage.
   c. The BBS shall include a Manual Bypass Switch which provides capability to transfer the power service to disable the BBS and operate only from the power service provided. The Manual Bypass Switch shall be as shown in Figure 925-5.

Figure 925 – 5 Manual Bypass Switch (Shown in normal BBS Mode)

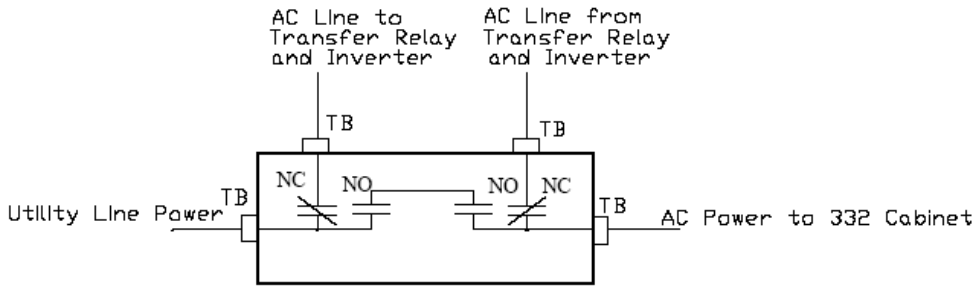

Notes:
1. TB - #8 Terminal Blocks
2. NO - Normally Open
3. NC - Normally Closed
4. NO/NC contacts shall all toggle simultaneously with one single manually operated switch.
5. Manual Bypass Switch shall only switch line. Neutral and Equipment Ground are not switched and shall be connected to 332 Cabinet buses.

d. The BBS shall provide the user with 3-sets of normally open (NO) and normally closed (NC) single-pole double-throw (SPDT) dry relay contact closures, available on a panel-mounted terminal block, rated at a minimum 120V/1A, and labeled so as to identify each contact. For typical configuration, see Figure 925-6.
   1) The first set of NO and NC contact closures shall be energized whenever the unit switches to battery power. Contact shall be labeled or marked “On Batt.”
   2) The second set of NO and NC contact closures shall be energized whenever the battery approaches approximately 40% of remaining useful capacity. Contact shall be labeled or marked “Low Batt.”
   3) The third set of NO and NC contact closures shall be energized two hours after the unit switches to battery power. Contact shall be labeled or marked “Timer.”
   4) Relay contact activation shall be annunciated on the front panel via a visual indication. This can be either discreet LED, or part of LCD screen, etc.

Figure 925 – 6 Relay Contacts (NO/NC) available on panel-mounted terminal block (typ)

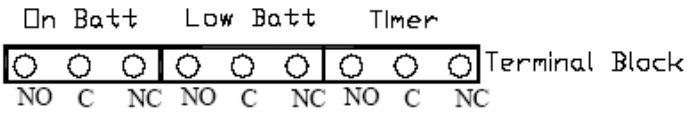

Notes:
1. NO/NC contacts may either share or use separate commons.

e. Operating temperature for both the inverter/charger, power transfer relay and manual bypass switch shall be –37 °C (-35F) to +74 °C (+165 F).

f. Both the Power Transfer Relay and Manual Bypass Switch shall be rated at 240VAC/30 amps, minimum

g. The BBS shall use a temperature-compensated battery charging system. The charging system shall compensate over a range of 2.5 – 4.0 mV/ °C (5-8 F) per cell. The temperature sensor shall be external to the inverter/charger unit. The temperature sensor shall come with 3 meters (10 feet) of wire. Ensure temperature sensor can be mounted to battery with ring terminal to prevent losing connectivity.

h. Batteries shall not be recharged when battery temperature exceeds 50 °C (122 F) ± 3 °C (6 F).

i. BBS shall bypass the utility line power whenever the utility line voltage is outside of the following voltage range: 100VAC to 130VAC (± 2VAC).

j. When utilizing battery power, the BBS output voltage shall be between 110 VAC and 125 VAC, pure sine wave output, ≤ 3% THD, 60Hz ± 3Hz.

k. BBS shall be compatible with CALTRANS Model 332A Cabinets, Model 170E Controllers, Model 2070 Controllers and cabinet components for full time operation.

l. In cases of low (below 98VAC) or absent utility line power, when the utility line power has been restored at above 105 VAC ± 2 VAC for more than 30 seconds, the BBS shall transfer from battery backed inverter mode back to utility line mode.

m. In cases of high utility line power (above 132VAC), when the utility line power has been restored at below 125VAC ± 2 VAC for more than 30 seconds, the BBS shall transfer from battery backed inverter mode back to utility line mode

n. BBS shall be equipped to prevent a malfunction feedback to the cabinet or from feeding back to the utility service.

o. In the event of inverter/charger failure, battery failure or complete battery discharge, the power transfer relay shall revert to the NC (and de-energized) state, where utility line power is connected to the cabinet.

p. Recharge time for the battery, from "protective low-cutoff" to 80% or more of full battery charge capacity, shall not exceed twenty (20) hours.

2. Mounting/Configuration

NOTE: All references made to EIA rail or EIA 19" (482.6mm) rack shall conform to Electronic Industries Standards EIA-310-B, Racks, Panels, and Associated Equipment, with 10-32 "Universal Spacing" threaded holes.

a. General

1) Inverter/Charger Unit shall be shelf-mounted or rack-mounted on a standard EIA 19" rack. If the inverter/charger is mounted inside the 332A Cabinet (Configuration 1), a shelf shall be provided that supports the weight of the unit.

2) Power Transfer Relay and Manual Bypass Switch shall be mounted on EIA rail.

3) All interconnect wiring shall be provided between Power Transfer Relay, Bypass Switch and Cabinet Terminal Service Block and shall be no less than 3 meters (9'10") of UL Style 1015 CSA TEW with the following characteristics:

- AWG Rating: 6 AWG
- Stranding: 133 strands of 30 AWG tinned copper
- Rating: 600 V, 105 °C, PVC Insulation

4) Relay contact wiring provided for each set of NO/NC relay contact closure terminals shall be a minimum of 3 meters (10 feet) of UL Style 1015 CSA TEW 18 AWG wire, same ratings as above, except 16 strands of 30 AWG tinned copper. Wiring shall be of adequate length for particular installation.

5) Figure 925-7 provides clarification as to how BBS Power Transfer Relay and Manual Bypass Switch are interconnected with Model 332A Cabinets in order to ensure interchangeability between all BBS manufacturers.

Figure 925- 7 BBS Utility Power Connection Diagram

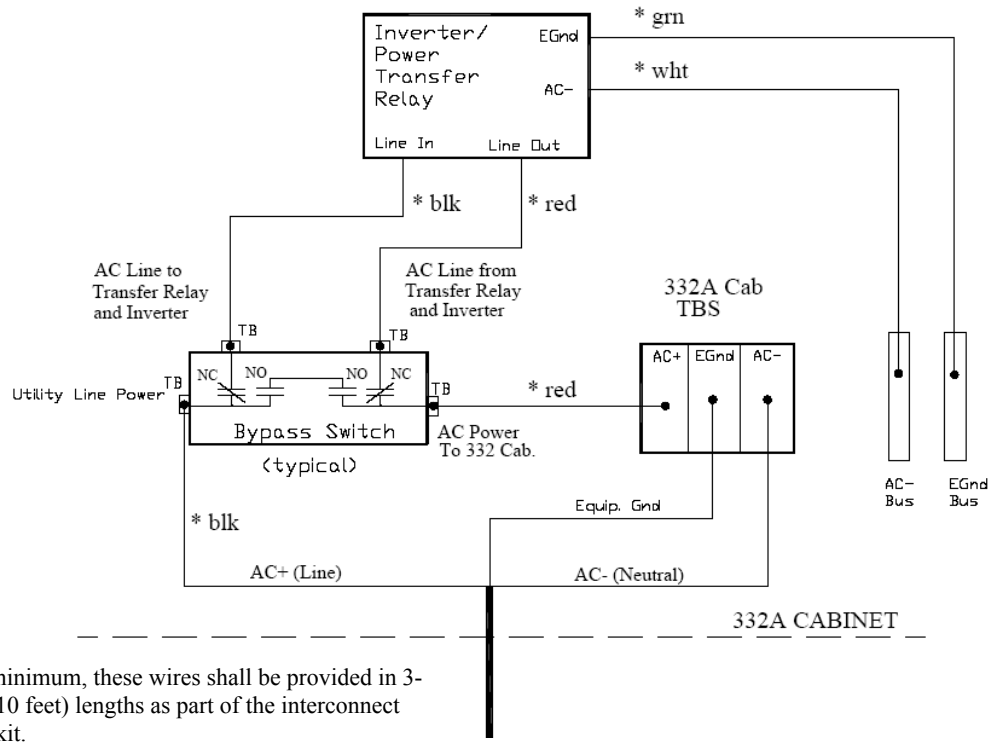

*As a minimum, these wires shall be provided in 3-meter (10 feet) lengths as part of the interconnect wiring kit.

6) All necessary hardware for mounting (shelf angles, rack, etc) shall be included in the bid price of the BBS. All bolts/fasteners and washers shall meet the following requirements:
   - Screw type: Pan Head Phillips machine screw
   - Size and Thread pitch: 10-32
   - Material: 18-8 stainless steel (Type 316 stainless steel is acceptable as an alternate)
   - Washer: Use one flat washer (18-8 stainless steel) under the head of each 10-32 screw (provided that the screws are properly tightened, lock washers are unnecessary.)
   - Number of screws per hinge bracket: Minimum of six (6) screws per hinge bracket spaced evenly along bracket, with one screw near each end.
7) There shall be two (2) basic BBS mounting options:
   a) Configuration 1 – The BBS (Inverter/Charger, Bypass Switch and Transfer Relay only) installed inside the 332A Cabinet, with the batteries installed in the externally mounted cabinet. See Figure 925-8 for location of inverter in 332A cabinet.
   b) Configuration 2 – The entire BBS, including batteries, installed inside the externally mounted cabinet.

Figure 925-8 BBS Mounting Diagram

For a typical Model 332A Cabinet

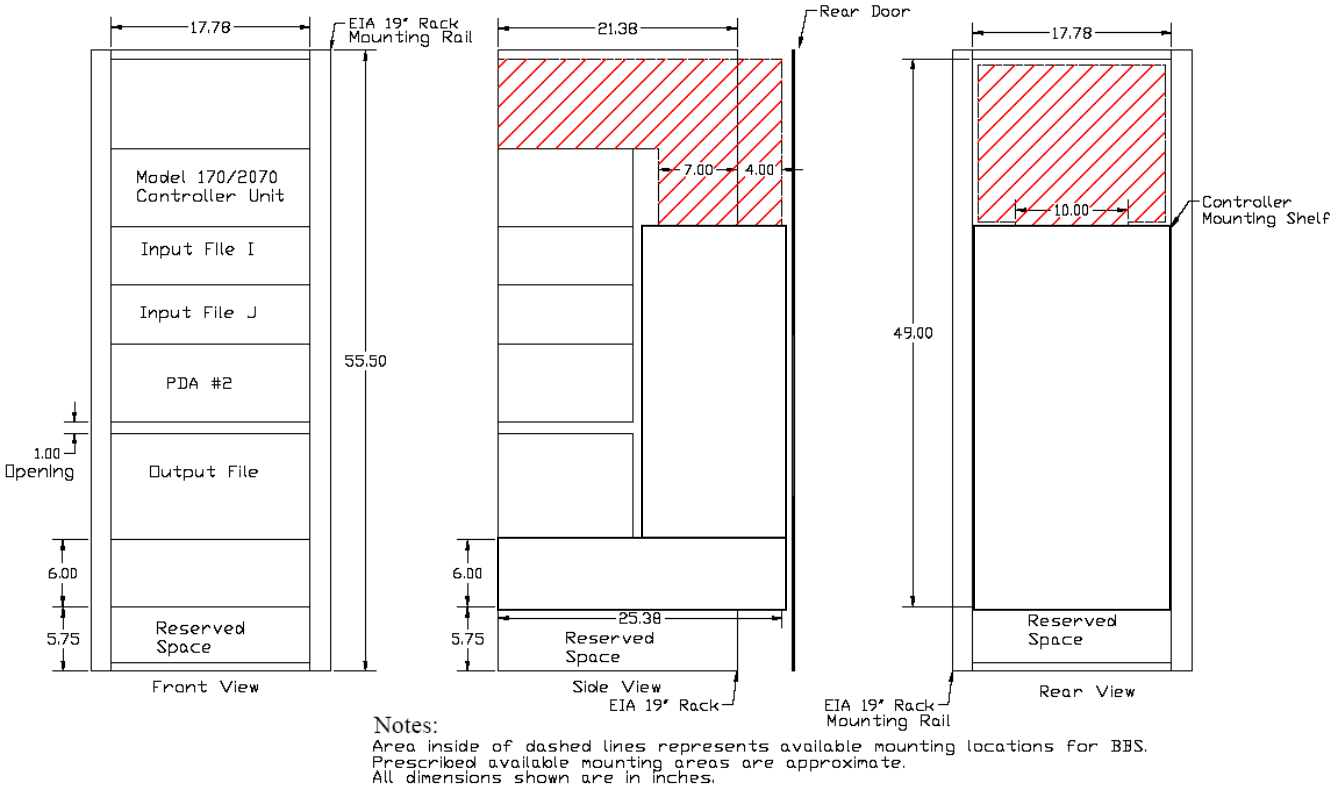

8) External Cabinet
   a) The External Cabinet shall be used for housing batteries and/or BBS, which includes inverter/charger unit, power transfer relay, manually operated bypass switch, any other control panels, and all wiring and harnesses.
   b) The same Inverter/Charger, Power Transfer Relay and manually operated Bypass Switch that fits inside a typical fully equipped CALTRANS Model 332A Cabinet shall also be able to fit inside the externally mounted cabinet.
   c) The External Cabinet shall be a NEMA 3R rated cabinet conforming to TEES, August 16, 2002 Chapter 7, Section 2-Housings for the construction and finish of the cabinet. The specific finish of the external cabinet shall match the finish of the 332A cabinet. Anti-Graffiti paint shall not be used. Two separate mounting installations shall be used. Refer to the project plans for the appropriate mounting installation.
      i. Mounting Installation Type A shall be typically used for installing at locations with existing 332 cabinet. This cabinet mounting installation shall attach the exterbnal cabinet to the side of the 332 cabinet in the relationship as shown in figure 925-9. Type A mounting installation shall use fasteners that meet the following requirements:
         - *(Total of 8 bolts per cabinet with 2 flat washers per bolt and 1 K-lock nut per bolt)*
         - *Cabinet mounting bolts shall be:*
         - *18-8 Stainless Steel Hex Head (Fully Threaded)*
         - *3/8" – 16 X 1"*
         - *Washers shall be:*
         - *Designed for 3/8" bolt*
         - *18-8 Stainless Steel 1" OD round flat type*
         - *K-lock washer shall be:*
         - *18-8 Stainless Steel, Hex Nut Assembled with Free-Spinning Tooth Washer*
         - *3/8" – 16 Screw size*

External Cabinet to 332A Cabinet couplings shall provide a conduit for power connections between the 332A Cabinet and External Cabinet. The couplings shall consist of three parts and meet the following requirements:

- *2" Nylon Insulated, Steel Chase Nipple*
- *2" Sealing, Steel Locknut*
- *2" Nylon Insulated, Steel Bushing*

The external cabinet shall come provided with all bolts, washers, nuts and cabinet-cabinet coupler fittings provided, necessary for mounting the external cabinet to the 332A Cabinet.

ii. Mounting Installation Type B shall be typically used for locations where a new traffic controller cabinet and foundation are being installed. This cabinet installation shall provide the external battery cabinet as a base mount cabinet on the same foundation as the 332 cabinet. Connections between the cabinets shall be through conduit in the cabinet base. The external cabinet shall be installed in the same relationship as shown in figure 925-9 to the 332 cabinet.The external cabinet shall be installed so that it is centered on the 30 inch left side of the 332 cabinet. Bolt BBS cabinet to pre-fab base. BBS cabinet opening shall be larger than the pre-fab base opening.

d) The specific dimensions and details of the external battery cabinet shall be as shown in Figures 925 – 10 through 925 – 12.

Figure 925-9 External BBS Cabinet Details

External Battery Cabinet

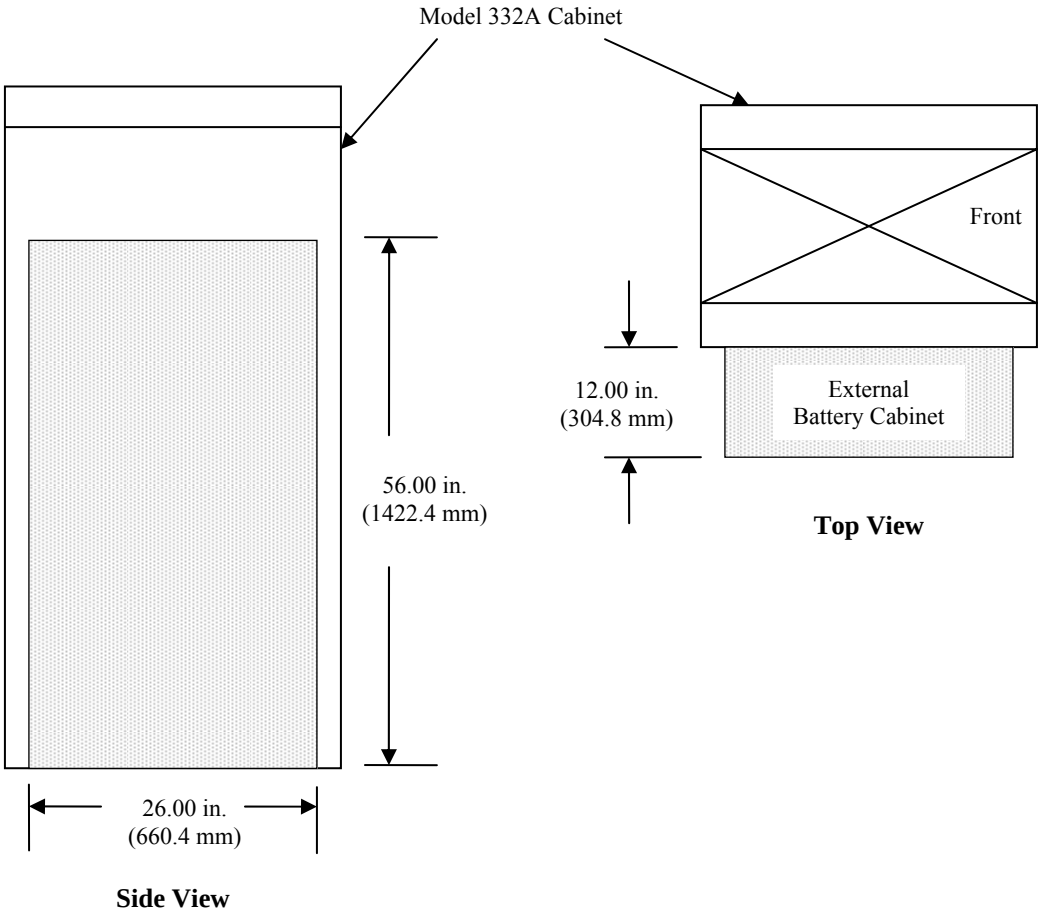

Figure 925-10 External BBS Cabinet Details

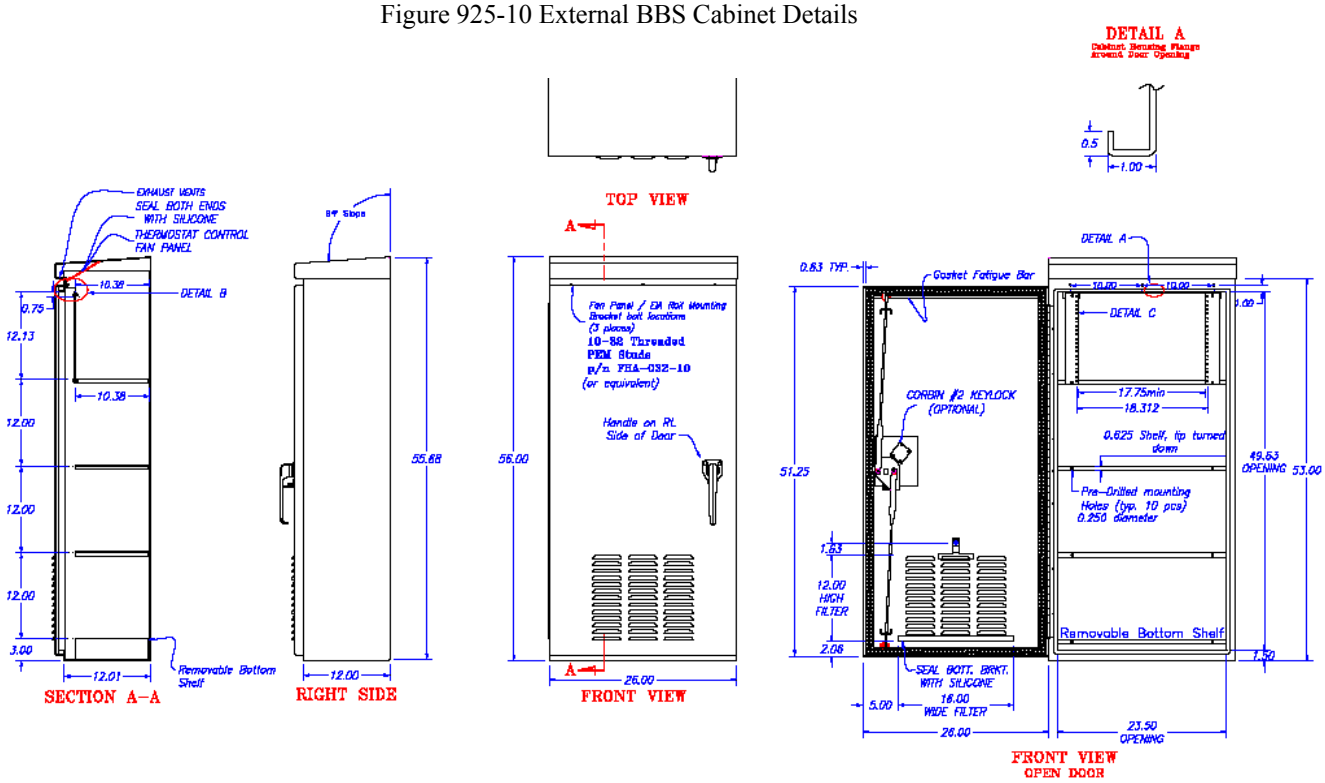

e) Four shelves shall be provided. There shall be a minimum of 304.8mm (12”) clearance between shelves. Each shelf shall be a minimum of 263.65mm (10.38”) X 635.0mm (25”), and capable of supporting a minimum of 57kg (125 lbs.). Shelf edges shall be turned down on all four sides for support and to provide a flat top surface. Shelves shall be predrilled with EIA rail mounting holes. Shelves shall provide a vertical “passageway” for wring in the rear of the cabinet on both the left and right.

f) The bottom shelf shall be capable of being removed.

Figure 925-11 EIA Rail for Mounting Inverter or PTR inside External BBS Cabinet

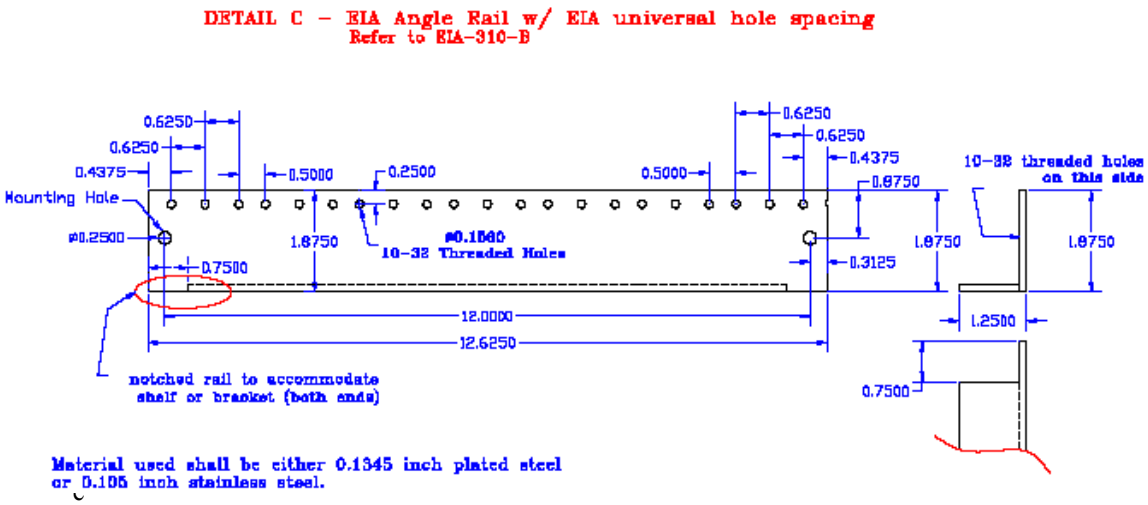

g) The External cabinet shall be ventilated through the use of louvered vents, filter, and one thermostatically controlled fan as per TEES Chapter 7 Section 2-Housings. The thermostat shall be accessible without removing the BBS controller.

h) External cabinet fan shall be AC operated from the same line output of the Manual Bypass Switch that supplies power to the 332 Cabinet. A 2-position terminal block shall be provided on the fan panel, along with 3 meters (10 feet) of connected hookup wire.

i) The door shall be attached to the cabinet through the use of either a continuous stainless steel piano hinge or four, two-bolts per leaf, hinges as per TEES Chapter 7 Section 2. The door shall use a padlock clasp or latch and lock mechanisms as described in the TEES, in order to lock the door.

j) Two EIA angle rails, per Detail C, Figure 925 – 11, along with all necessary mounting hardware (4 sets of 10-32 bolts and nuts with captive washers) shall be provided with the external cabinet (not installed). Rails shall be symmetric to allow for installation on either right or left sides of the cabinet. Mounting holes and bracket shall allow for EIA rail installation at any location in the external cabinet. The EIA mounting angle nominal thickness shall be either 0.1345 inch (3.4163mm) plated steel or 0.105 inch (2.667mm) stainless steel.

k) EIA rail mounting bracket shall be of continuous, one-piece design bolted into the cabinet to provide adequate support for rail-mounted equipment. See Figure 925 – 12.

l) Pressed in, flush-head threaded screw posts shall be inserted into the front face of the cabinet enclosure top sill. These threaded posts shall be used to mount both the fan panel and the EIA rail-mounting bracket. The screw posts shall be #10-32 thread size stud 0.625 inches in length. Refer to Figure 925 – 10, front views for mounting detail.

Figure 925 – 12 EIA Rail Mounting Bracket for Mounting EIA Rails inside External BBS Cabinet

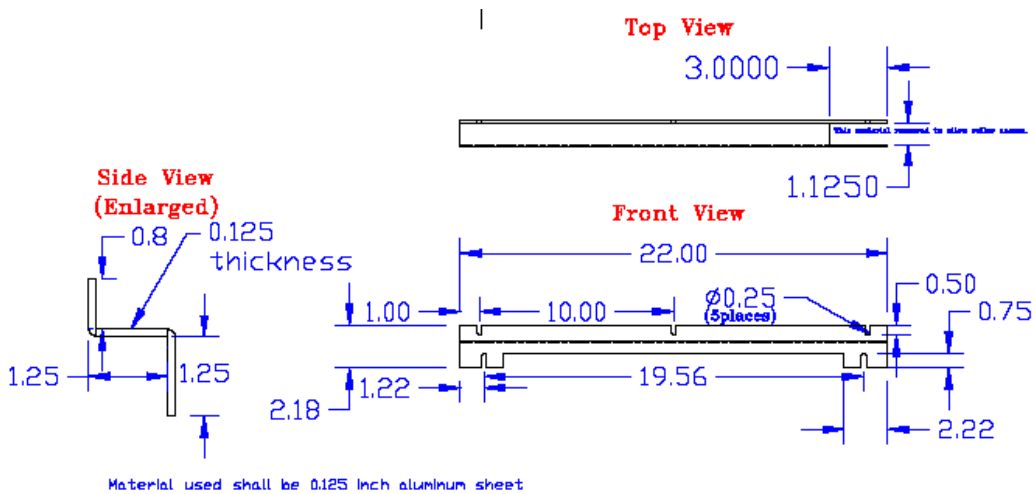

3.

Maintenance, Displays, Controls and Diagnostics

a. The BBS shall include a display and /or meter to indicate current battery charge status and conditions.
   1) The BBS shall provide voltmeter standard probe input-jacks (+) and (-) to read the exact battery voltage drop at the inverter input.
   2) The BBS shall include a 0 to 100% battery capacity LED indicator.

b. The BBS shall have lightning surge protection compliant with IEEE/ANSI C.62.41.

c. The BBS shall be equipped with an integral system to prevent battery from destructive discharge and overcharge.

d. The BBS and batteries shall be easily replaced with all needed hardware and shall not require any special tools for installation.

e. The BBS shall include a front-panel event counter display to indicate the number of times the BBS was activated and a front-panel hour meter to display the total number of hours the unit has operated on battery power. Both meters shall be resetable.

f. Manufacturer shall include a set of equipment lists, operation and maintenance manuals, and board-level schematic and wiring diagrams of the BBS, and the battery data sheets. Manual shall conform to TEES August 16, 2002, Chapter 1, Section 1.2.4.2.

4. Battery System
   a. Individual batteries shall be:
      1) Voltage rating: 12V type
      2) Group size: 24 maximum
      3) Batteries shall be easily replaced and commercially available off the shelf.
   b. Batteries used for BBS shall consist of 4 to 8 batteries with a cumulative minimum rated capacity of 240 amp-hours.
   c. Batteries shall be deep cycle, sealed prismatic lead-calcium based AGM/VRLA (Absorbed Glass Mat/ Valve Regulated Lead Acid).
   d. Batteries shall be certified by the manufacturer to operate over a temperature range of – 25 °C (-13F) to +74 °C (+165 F).
   e. The batteries shall be provided with appropriate interconnect wiring and corrosion-resistant mounting trays and/or brackets appropriate for the cabinet into which they will be installed.
   f. Batteries shall indicate maximum recharge data and recharging cycles.
   g. Battery Harness
      1) Battery interconnect wiring shall be via two-part modular harness.
      2) Part I shall be equipped with red (+) and black (-) 30.48 cm (12 inches) cabling that can be permanently connected to the positive and negative posts of each battery. Each red and black pair shall be terminated into an Anderson Power Pole Connector or AMP Power Series Connector or equivalent style connector.
      3) Part II shall be equipped with the mating Power Pole style connector for the batteries and a single, insulated Power Pole style connection to the inverter/charger unit. Harness shall be fully insulated and constructed to allow batteries to be quickly and easily connected in any order to ensure proper polarity and circuit configuration.
      4) Power Pole style connectors may be either one-piece or two-piece. If a two-piece connector is used, a locking pin shall be used to prevent the connectors from separating.
      5) The length of the battery interconnect harness (Part II) shall be a minimum of 152.4 cm (60 inches) from the Inverter/Charger plug to the first battery in the string. The lateral length of the harness between battery connectors shall be a minimum of 30.48 cm (12 inches).
      6) All battery interconnect harness wiring shall be UL Style 1015 CSA TEW or Welding Style Cable or equivalent, all of proper gauge with respect to design current and with sufficient strand count for flexibility and ease of handling.
      7) Battery terminals shall be covered and insulated with molded boots so as to prevent accidental shorting.

B. Fabrication

Refer to Subsection 925.2.07.A.1 for controller cabinet minimum fabrication Specifications.

C. Acceptance

General Provisions 101 through 150. Each BBS shall be manufactured in accordance with a manufacturer Quality Assurance (QA) program. The QA program shall include two Quality Assurance procedures: (1) Design QA and (2) Production QA. The Production QA shall include statistically controlled routine tests to ensure minimum performance levels of BBS units built to meet this specification and a documented process of how problems are to be resolved. The manufacturer, or an independent testing lab hired by the manufacturer, shall perform Design Qualification Testing on new BBS system(s) offered, and when any major design change has been implemented on an existing design. A major design change is defined as any modification, material, electrical, physical or theoretical, that changes any performance characteristics of the system, or results in a different circuit configuration. Where a dispute arises in determining if a system is a new design or if the system has had a major design change, the State will make the final determination if Design Qualification Testing is required prior to production consideration.

Production Quality Control tests shall be performed on each new system prior to shipment. Failure to meet this requirements shall be cause for rejection. The manufacturer shall retain test results for seven years. Each BBS shall be given a minimum 100-hour burn-in period to eliminate any premature failures. Each system shall be visually inspected for any exterior physical damage or assembly anomalies. Any defects shall be cause for rejection.

D. Materials Warranty

Refer to Subsection 925.2.01.D for Materials Warranties. Manufacturers shall provide a two (2) year factory-repair warranty for parts and labor on the BBS from date of acceptance by the Department. Batteries shall be warranted for full replacement for two (2) years from date of purchase. The warranty shall be included in the total bid price of the BBS.

925.2.07 Flashing Beacon Assembly

A. Requirements

This specification is for a flashing signal cabinet, which consists of an aluminum cabinet containing a flasher assembly, Field connection terminal block, surge arrestor and circuit breaker wired in a manner to operate flashing beacons. Refer to Figure 925-13.

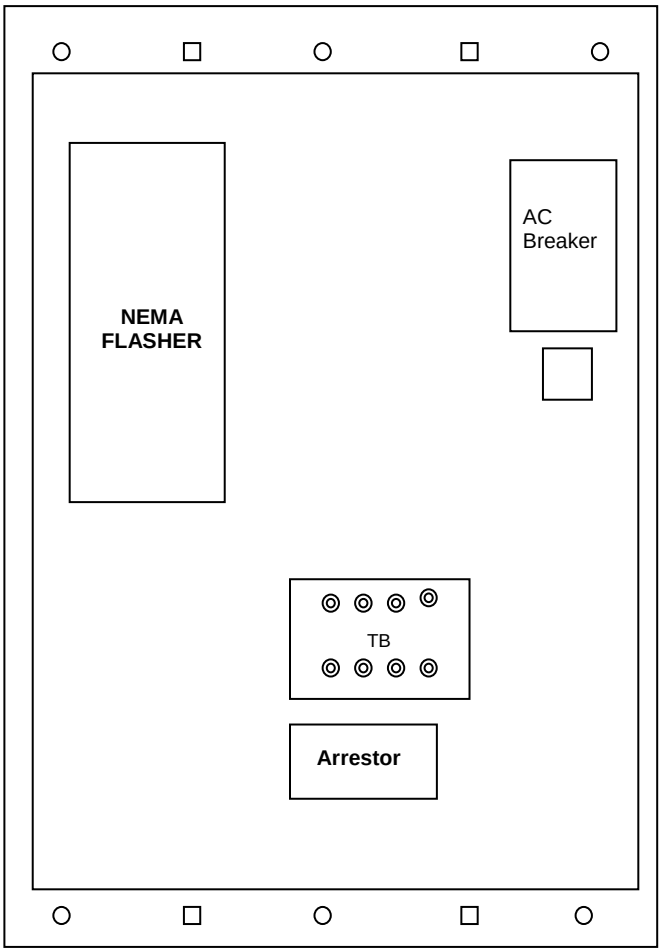

Note: Front view of cabinet Door Assembly not shown

No scale

Figure 925-13—Typical Flashing Signal Cabinet Layout

1. Cabinet

   Supply a NEMA Type 3R cabinet assembly, manufactured of aluminum with a minimum thickness of 0.125 inches (3 mm).

   Ensure that the cabinet exterior has a smooth, uniform “bare” aluminum finish with all joints between adjoining cabinet components (sides and bottom) continuously welded on the outside to prevent the intrusion of moisture and dust.

   Ensure that all welds are free of cracks, blow holes and other irregularities.

Supply a cabinet with the following exterior dimensions:

	Minimum	Maximum
Height	14 inches (350 mm)	18 inches (450 mm)
Width	10 inches (250 mm)	14 inches (350 mm)
Depth	7 inches (175 mm)	10 inches (250 mm)

Use a cabinet door that is double flanged on all four sides to prevent the entry of dirt and liquids when the door is open.

Install a one-piece gasket formed around the door opening to insure a weather tight seal when the door is secured.

Attach the door to the cabinet housing by a continuous tamper proof hinge.

Equip each cabinet with a Corbin #2 lock and one key. Police panel type locks are not acceptable.

Install an aluminum back panel in the cabinet, mounted on standoffs, to facilitate mounting of internal components.

Install exterior aluminum mounting brackets, which extend a minimum of 1.75 inches (44 mm) and a maximum of 2.5 inches (63 mm) from the top and bottom of the cabinet.

Use brackets that extend across the full width of the cabinet back on the top and bottom.

Provide these brackets with holes for mounting to a flat surface with screws and vertical slots for banding to steel, concrete or wooden signal poles.

2. Flasher Unit

Supply a standard plug in two circuits NEMA flasher.

Ensure that the flasher is of all solid state construction, meets the requirements of the NEMA Standards and is rated at a minimum of 10 A per circuit.

Ensure that the flasher utilizes zero voltage turn-on and turn-off current and is capable of dimming outputs.

3. Surge Arrestor

Supply a flasher cabinet that incorporates an AC surge arrestor to protect the internal components from lighting and over voltages on the AC service input.

The requirements for the surge arrestor are:

Two Stage Arrestor	
Peak Surge Current	20000 A
Peak Surge Voltage @ 20KA	280 V
Clamp Voltage	280 V @ 20 kA
Continuous AC Voltage	120 V AC RMS
Response Time	<5 nsec
Operating Temp.	-40 ºF to 185 ºF (-40 ºC to 85 ºC)

4. Circuit Breaker

Include a 15 A circuit breaker in the cabinet. The circuit breaker shall have the following characteristics.

Thermal Magnetic 1 pole 120/240 VAC at 50/60 Hz 15 A
Interrupting Rating of 10KA at 48 VDC
Wire Size 14 to 2 AWG
35 MM Din Rail mounting

5. Terminal Block

Include a four position terminal block in the cabinet for making field connections. Properly label all field terminal connections.

6. Construction

Assemble the flasher assembly, terminal block, surge arrestor and circuit breaker in the cabinet as shown on the attached drawing.

Wire all components together as a working unit, thus requiring only field connections to and from the AC power and flashing beacons.

B. Fabrication

Refer to Subsection 925.2.07.A.1 for controller cabinet minimum fabrication specifications.

C. Acceptance

General Provisions 101 through 150.

D. Materials Warranty

Refer to Subsection 925.2.01.D for Materials Warranties.

925.2.08 Flashing Signal Cabinet With Time Clock

A. Requirements

This specification is for a flashing signal cabinet with time clock which consists of an aluminum cabinet containing a flasher assembly, time clock, field connection terminal block, surge arrestor and circuit breaker wired in a manner to operate school flashing beacons. Refer to Figure 925-14.

1. Cabinet

Supply a NEMA Type 3R cabinet assembly that is manufactured of aluminum with a minimum thickness of 0.125 inches (3 mm).

Ensure that the cabinet exterior has a smooth, uniform natural aluminum finish, and that all joints between adjoining cabinet components (sides and bottom) are continuously welded on the outside to prevent the intrusion of moisture and dust.

Ensure that all welds are free of cracks, blow holes and other irregularities.

The exterior dimensions of the cabinet are as follows:

	Minimum	Maximum
Height	14 inches (350 mm)	18 inches (450 mm)
Width	10 inches (250 mm)	14 inches (350 mm)
Depth	12 inches (300 mm)	16 inches (400mm)

Supply a cabinet door that is double flanged on all four sides to prevent the entry of dirt and liquids when the door is open.

Use a one-piece gasket that is formed around the door opening to insure a weather tight seal when the door is secured.

Attach the door to the cabinet housing with a continuous tamper proof hinge.

Provide each cabinet with a Corbin #2 lock and one key. Police panel type locks are not acceptable.

Supply each cabinet with an aluminum back panel mounted on standoffs to facilitate mounting of internal components.

Supply cabinets with exterior aluminum mounting brackets, which extend a minimum of 1.75 inches (44 mm) and a maximum of 2.5 inches (63 mm) from the top and bottom of the cabinet.

Use brackets that extend across the full width of the cabinet back on the top and bottom.

Provide these brackets with holes for mounting to a flat surface with screws and vertical slots for banding to steel, concrete or wooden signal poles.

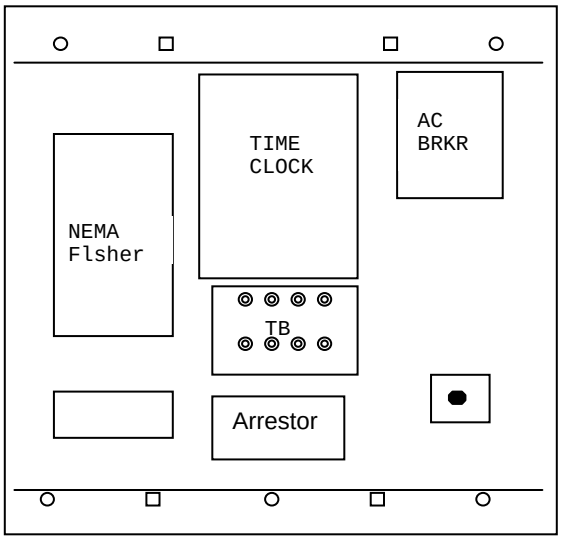

Note: Front view of cabinet Door Assembly not shown No scale

Figure 925-14—Typical Flashing Cabinet with Time Clock Cabinet Layout

2. Flasher Unit

   Supply a standard plug in, two circuits NEMA flasher.

   Ensure that the flasher is of all solid state construction, meets the requirements of the NEMA Standards and is rated at a minimum of 10 A per circuit.

   Ensure that the flasher utilizes zero voltage turn-on and turn-off current and be capable of dimming outputs.

3. Time Switch

   Supply a time switch that meets the requirements of Subsection 925.2.09 of this specification.

4. Surge Arrestor

   Supply flasher cabinets that incorporate an AC Arrestor to protect the internal components from lighting and over voltages on the AC service input.

   The requirements of the surge arrestor are as follows:

Two Stage Arrestor	
Peak Surge Current	20000 A
Peak Surge Voltage @ 20KA	280 V
Clamp Voltage	280 V @ 20 kA
Continuous AC Voltage	120 V AC RMS
Response Time	<5 nsec
Operating Temp.	-40 ºF to 185 ºF (-40 ºC to 85 ºC)

5. Circuit Breaker

   Include a 15 A circuit breaker in each cabinet. The circuit breaker shall have the following characteristics.

   - Thermal Magnetic 1 pole 120/240 VAC at 50/60 Hz 15 A
   - Interrupting Rating of 10KA at 48 VDC
   - Wire Size 14 to 2 AWG
   - 35 MM Din Rail mounting

6. Terminal Block

   Include a four position terminal block in each cabinet for making field connections. Properly label all field terminal connections.

7. Construction

   Assemble the flasher assembly, terminal block, surge arrestor and circuit breaker in the cabinet as shown on the attached drawing.

   Wire all components together as a working unit, thus requiring only field connections of the AC power and flashing beacons.

B. Fabrication

Refer to Subsection 925.2..07.A.1 for controller cabinet minimum fabrication Specifications.

C. Acceptance

General Provisions 101 through 150.

D. Materials Warranty

Refer to Subsection 925.2.01.D for Materials Warranties.

925.2.09 Time Clock

A. Requirements

Supply time clocks that are single circuit, calendar programmable, solid state, fully self-contained units (RTC AP 21 or Eltec NTC 17E or equivalent) that meet the following Specifications:

1. Alphanumeric liquid crystal display.
2. Automatic daylight savings time and leap year compensation. Changes in the daylight savings time program made through the keypad do not require hardware modification.
3. Minimum twenty-four (24) hour capacitive back up. Battery back up is not acceptable.
4. Keypad entry programming without the use of any external devices such as a PC, external programming unit, another time switch, etc.
5. Operate on 95 to 135 V AC, 60 Hz line current.
6. SPDT relay output rated at 15 A.
7. Maximum size of 4.25 inches (110 mm) wide, 8.25 inches (210 mm) high and 2 inches (50 mm) deep.
8. A programming manual is to be included with each unit.

B. Fabrication

General Provisions 101 through 150.

C. Acceptance

General Provisions 101 through 150.

D. Materials Warranty

Refer to Subsection 925.2.01.D for Materials Warranties.

925.2.10 Self Tuning Loop Detector

A. Requirements

This specification sets forth the minimum acceptable design, operational and functional performance requirements for multi-channel, inductive loop vehicle detection systems.

1. General Requirements

   a. Mounting

      Ensure that the unit is configured for rack mount insertion into a NEMA (TS l or TS 2) card rack and/or CALTRANS Type 2070 cabinet input file.

   b. Environmental

      Ensure that the unit is in full compliance with the environmental tests, transient tests and size requirements of NEMA standard TS-l Section 15, TS-2 Section 6.5 and the California Type 2070 Specifications.

Provide documentation from an independent laboratory, which certifies that the unit is in compliance with the above Specifications.

c. LED Indicator
Ensure that each channel includes two high visibility LED indicators; one for the detect state and the second to indicate the status of the fault monitor.

d. Phase Indicator
Ensure that each channel has an erasable write-on pad to aid in identification of the associated phase or function.

2. Operational Requirements

a. Tuning
Supply units that are fully digital and self-tuning.

Ensure that each channel of the unit can automatically tune to any loop and lead in combination within two (2) seconds of application of power or when a reset signal is received.

Ensure that the tuning circuit is designed so that drift, caused by environmental changes or changes in applied power, does not cause false actuations.

b. Scanning
Supply units that sequentially scan each channel (only one channel energized at any given time) to eliminate crosstalk from multiple loops in adjacent lanes and/or allow overlapped loops for directional control and/or allow use of multi-conductor homerun cable when connected to the same detector unit.

c. Sensitivity Setting
Ensure that each channel is equipped with front panel selectable sensitivity settings in presence and pulse modes.

d. Frequency
Supply units that have a minimum of three switch selectable operating frequencies.

e. Inductance Range
Ensure that each channel can tune to an inductive load from 50 to 2000 microhenries with a Q factor > 5.

f. Grounded Loops
Ensure that each channel can continue to operate with poor quality loop systems (Q>2) including those that have a single point short to ground.

g. Fault Monitoring
Supply units that constantly monitor the operation of each channel.

Ensure that the unit detects shorted loops, open circuit loops or sudden changes in inductance (>25% of nominal).

Ensure that each type of fault is indicated on a fault LED by a unique sequence of flashes until the fault is rectified.

Ensure that while the channel is in the fault condition, the channel output remains in the detect state.

When the fault is rectified, the fault LED continues to emit the sequence signifying the last fault detected, but the detect LED and output returns to normal operation.

h. Failsafe Output
Ensure that each channel output generates a continuous solid state output to the controller when power to the detector is removed.

i. Operational Modes
Supply units with each channel selectable for either pulse or presence modes and that meet the following requirements:

- Pulse Mode

  This setting provides a single output pulse (125 ms +/- 25) in response to a vehicle entering the loop.

  If a vehicle remains in the sensing zone in excess of two (2) seconds, the unit "tunes out" said vehicle.

  The channel is then capable of detecting another vehicle entering the same detection zone.

- Presence Mode

  The presence hold time is a minimum of four (4) minutes for small vehicles (motorcycles) and a minimum of sixty (60) minutes for automobiles.

Ensure that the unit tunes out of continuous peak hour traffic over long or multiple small loops as long as there is vehicle motion in the sensing zone every ten (10) minutes.

j. Resets

Ensure that the channels are manually resettable by removing the power momentarily.

Ensure that the channels reset remotely when the voltage on Pin C falls below 8 V DC for a period > l5µs, and that the unit resumes normal operation within four (4) seconds after the application of power or after a reset signal of l5µs.

k. Field Tuning

Ensure that field adjustments to the operation of the detector do not require the use of a meter, circuit changes, special software or any substitutions, modifications or additions to the unit.

3. Performance Requirements

If testing should be required, provide the Department with a test unit and/or software within ten (10) calendar days of the request.

Should the unit fail to meet the design and/or performance requirements of this specification, the unit will be rejected.

Ensure that the units meet the following requirements:

a. Capable of detecting passage, holding presence and accurately counting all types of licensed motor vehicles when connected in various loop configurations and lead-in combinations without detecting vehicles in adjacent lanes.
   - **Typical Loop Configurations with Lead-in of 5 feet (1.5 m) to 1,500 feet (1000 m) are:**
   - **6 feet x 6 feet (1.8 m x 1.8 m)**
   - **6 feet x 20 feet (1.8 m x 6 m)**
   - **6 feet x 40 feet [(1.8 m x 12 m) standard or quadrupole]**

b. Capable of responding to an inductance change of 0.02% and sense vehicles at speeds of up to 80 mph (130 km/h).

c. Not detect vehicles, moving or stopped, at distances greater than three feet for any loop perimeter.

d. Detect all vehicles over multiple turn and/or multiple loops that may he connected in series, parallel or series/parallel with homerun lengths from <5 feet (1.5 m) to > 1,500 feet (1,000 m).

4. Optional Features

In addition to the requirements listed in the previous sections, the units may be requested with any combination of the following optional features:

a. Option 1- Timing Features - Delay & Extension

When this option is specified, ensure that the unit incorporates the following features:

1) Delay Timing

Minimum selectable delay time of 1 to 30 seconds in minimum 1-second increments for each channel.

2) Extension Timing

Minimum selectable extension time of 0.5 to 10 seconds in minimum 0.5-second increments for each channel.

b. Option 2 - Advanced Features

When the option for advanced features is specified, supply units that incorporate the following advanced features:

1) Serial Port Interface

When the serial port interface is specified, equip the detector with a front and rear panel RS 232 port for the transmission of data. Provide Windows 95 compatible software for interfacing with the detector.

2) PC Interface

Ensure that PC software, when connected directly to the unit through the front panel RS 232 port, provides a screen to display the following loop system operating characteristics, on a per channel basis, for system setup, data collection and diagnostics.

- Loop Status
- Loop Inductance (µH)
- Loop Frequency (kHz)

- Inductance Change (nH)
- Last Fault: Open, Shorted, >25% ΔL
- Fault Occurrence: Date & Time
- Vehicle Count

3) Speed, Volume & Occupancy

The software, when connected directly to the unit, is capable of collecting and storing speed, volume and occupancy data from each detector channel.

The software allows assignment of loop-to-loop distances to enable accurate speed and vehicle length measurements.

The speed volume and occupancy information is uploaded and stored in the vendor-supplied software.

Upon request, supply the necessary information/protocols to allow the Department to write custom software to retrieve speed, volume and occupancy data.

B. Fabrication

General Provisions 101 through 150.

C. Acceptance

General Provisions 101 through 150.

D. Materials Warranty

Refer to Subsection 925.2.01.D for Materials Warranties.

925.2.11 Loop Sealant

A. Requirements

Furnish and install loop sealant according to Subsection 833.2.09, "Polyurethane Sealant for Inductive Loops". For a list of sources, see QPL 75.

B. Fabrication

General Provisions 101 through 150.

C. Acceptance

General Provisions 101 through 150.

D. Materials Warranty

Refer to Subsection 925.2.01.D for Materials Warranties.

925.2.12 Vehicle Signal Heads

A. Requirements

Supply vehicle signal heads that are 12 inches (300 mm) in diameter for traffic signal control applications. For ramp metering systems supply both 12 inches (300 mm) and 8 inches (200 mm) as per the Plans.

Ensure that the 8 inch (200mm) or 12 inch (300 mm) polycarbonate vehicle signal heads meet the current ITE specification on Vehicle Traffic Control Signal Heads with the following modifications and / or clarifications:

1. Unless otherwise approved by the Engineer or as noted on the Plans, supply signal heads with the following exterior color scheme:
   - Signal Housing - Highway Yellow.
   - Front Face including Doors and Visors: Flat Black
2. Provide housing and housing door that are one piece injection molded ultraviolet and heat stabliized polycarbonate resin with the color impregnated in the material.
3. Terminate the wiring from each signal section in the top section of the head assembly. Ensure that the cable jacket is a minimum of 6 inches inside the signal head assembly.
4. Provide the appropriate Vehicle Signal LED Signal in each section either Circular or Arrow Module.

5. Provide an effective seal with the LED module to make the assembly weather tight.
6. Mount one aluminum reinforcing support plate in the top of the red section of each three, four or five-section signal head for the installation of mounting hardware.
7. Install a support plate between each section of all signal heads. Place these plates such that there is a plate in the bottom of and/or top of any sections where sections adjoin to another section.
8. Provide Signal Heads that use stainless steel hardware and are weather tight. Ensure signal heads that are supplied are sealed for mounting in all possible configurations.
9. Provide Signal Heads that have housing door that "positively" latches using two eyebolts and wing nuts. Ensure the Signal door has hinge lugs molded on one side and two latch jaws are molded on the other side.
10. Provide signal heads that provide a positive method of holding the lens such that the lens does not rotate. Ensure the lens is weather tight. Lens clips which do not apply firm pressure to the lens gasket to avoid rotation are not acceptable. When constructing side by side signal sections ensure that both doors can open at the same time (butterfly). When doors are open ensure that the door will remain attached to housing. Ensure bottom section has drainage holes.

B. Fabrication

Refer to ITE Standards for material composition and finish Specifications.

C. Acceptance

Refer to ITE Standards for material composition, finish Specifications, and wind loading requirements.

D. Materials Warranty

Refer to Subsection 925.2.01.D for Materials Warranties.

925.2.13 Pedestrian Signal Head

A. Requirements

Provide each section with a visor encompassing the top and sides of the signal face of a size and shape adequate to shield the lens from external lighted sources.

An acceptable option is a "Z-crate" or louver type visor for mounting over the Pedestrian signal face.

Construct the housing of one piece cast aluminum alloy with two integrally hinge lugs, screw slots and openings at each end. Construct the door of one piece cast aluminum alloy with two hinge lugs cast on top of the door and two latch points cast on the bottom. Provide hinge pins of stainless steel to attach the door to the housing and two eye bolts and wing nuts on the other side of the door.

Ensure that the door is provided with a neoprene gasket capable of making a weather resistant, dustproof seal when closed. Supply Pedestrian signal heads with a black face and a yellow body, unless otherwise specified on the Plans.

Ensure that Pedestrian indications are distinguishable to the Pedestrian both day and night and at all distances from 10 feet (3 m) to the full width of the areas to be crossed.

Use symbols that are 12 inches (300 mm) high. Use only internal illumination.

Ensure that when illuminated, the "HAND" symbol is Portland Orange and the "PERSON" symbol is Lunar White, meeting the ITE Standards. Ensure that an opaque material obscures all areas of the face or lens, except for the message. Ensure that when not illuminated, the symbols are not to be distinguishable by Pedestrians at the far end of the crosswalk they control.

B. Fabrication

General Provisions 101 through 150.

C. Acceptance

General Provisions 101 through 150.

D. Materials Warranty

Refer to Subsection 925.2.01.D for Materials Warranties.

925.2.14 Optically Programmed Signal Head

A. Requirements

Supply signal heads that permit the visibility zone of the indication to be determined optically and require no hoods or louvers.

The projected indication may be selectively visible or veiled anywhere within 15 degrees of the optical axis.

Ensure that no indication results from external illumination and that one light unit does not illuminate a second. The components of the optical system include the lamp, lamp collar, optical limiter-diffuser, and objective lens.

Ensure that the optical system accommodates projection of diverse, selected indications to separate portions of the roadway such that only one indication will be simultaneously apparent to any viewer.

Ensure that the projected indication conforms to ITE transmittance and chromaticity Standards.

1. Construction
   a. Provide an LED Lamp Module that is a direct replacement for the incandescent lamp. Ensure the Lamp modules are on the latest CALTRANS QPL for LED Programmed Visibility Modules. Ensure the unit provided operates over the voltage range of 80 to 135 VAC and the tempoerature range of -40 C (-40 F) to 74 C (165 F). Provide modules that conform to the applicable portions of section 925.2.15. Ensure the unit provides a minimum luuminous intensity of 500 candela and does not exceed 18 watts at 25 C (77 F).
      Couple the lamp to the diffusing element with a collar including a specular inner surface. The diffusing element may be discrete or integral with the convex surface of the optical limiter.
   b. Supply an optical limiter with an accessible imaging surface at focus on the optical axis for objects 900 to 1,200 feet (270 to 360 m) distance and permit an effective veiling mask to be variously applied as determined by the desired visibility zone.
      Ensure that the optical limiter is provided with positive indexing means and is composed of heat-resistant glass.
   c. Ensure that the objective lens is a high-resolution planar incremental lens hermetically sealed within a flat laminate of weather resistant acrylic or approved equal.
      Supply a lens that is symmetrical in outline and that may be rotated to any 90-degree orientation about the optical axis without displacing the primary image.
2. Mounting
   a. Supply signals that mount to standard 1.5 inch (38 mm) fittings as a single section, as a multiple section face, or in combination with other signals.
      Provide signal sections with an adjustable connection that permits incremental tilting from 0 to 10 degrees above or below the horizontal while maintaining a common vertical axis through couplers and mounting.
      Ensure that terminal connections permit external adjustment about the mounting axis in 5-degree increments.
   b. Ensure that the signal is mountable with ordinary tools and capable of being serviced with no tools.
      Supply attachments such as back plates or adapters that conform and readily fasten to existing mounting surfaces without affecting water and light integrity of the signal. Supply heads with tri-studs for mounting.
3. Electrical

   Supply lamp fixtures that comprise a separately accessible housing and integral lamp support indexed ceramic socket and self-aligning, quick release lamp retainer.

   Ensure that electrical connection between case and lamp housing can be accomplished with an interlock assembly, which disconnects lamp holder when opened. Include a covered terminal block for clip or screw attachment of lead wires for each signal section.

   Use concealed No. 18 AWG, stranded and coded wires to interconnect all sections to permit field connection within any section.
4. Photo Controls

   Ensure that each signal includes integral means for regulating its intensity between limits as a function of the individual background illumination.

   Ensure that lamp intensity is not less than 97% of uncontrolled intensity at 10 750 lux, and reduces to 15 + 2% of maximum at less than 10.75 lux.

   Ensure that response is proportional and essentially instantaneous to any detectable increase of illumination from darkness to 10 750 lux, and damped for any decrease from 10 750 lux.

Ensure that the intensity controller is comprised of an integrated, directional light sensing and regulating device interposed between lamp and line wires.

Ensure that it is compatible with 60 Hz input and responsive within the range 105 to 135 V AC.

Output may be phase controlled, but ensure that the device provides nominal terminal impedance of 1,200 Ω open circuit and a corresponding holding current.

B. Fabrication

General Provisions 101 through 150.

C. Acceptance

General Provisions 101 through 150.

D. Materials Warranty

Refer to Subsection 925.2.01.D for Materials Warranties.

925.2.15 LED Signal Modules

A. Requirements

This specification covers Type 1 Light Emitting Diode (LED) red, green and yellow modules for vehicle signals for both Circular and Arrow indications. It also covers LED Pedestrian "HAND & PERSON" signal modules.

1. General Requirements All Modules

   Ensure that Type 1 LED signal module include a LED circuit board with LEDs and required circuit components, 36 inch (900 mm) 16 AWG wire leads with strain relief and spade terminals, a rigid housing, and a one piece neoprene gasket.

   Supply Type 1 LED signal modules that are watertight when mounted in the traffic signal housing.

   Submit life data on the LEDs from the LED Signal Module manufacturer to calculate the expected useful life.

   Supply modules with permanent markings of date of manufacture and date of installation.

   Ensure that the Type 1 LED signal modules utilize the same mounting hardware that is used to secure the incandescent lens and gasket assembly.

   Provide LED modules that are pixilated (5mm) for all circular indications, arrow indications, and hand and person pedestrian displays.

2. Optical All Modules

   Provide test data from an independent laboratory to verify that the performance of the product meets current ITE requirements.

   Ensure that the individual LEDs are wired such that a catastrophic failure of one LED will result in the loss of not more than 5% of the signal module light output.

   The failure of a single LED in a string or cluster of LED's causes loss of light from only that LED, not the entire string or indication.

   Provide control circuitry that prevents the current flow through the LEDs in the "off" state to avoid any false indications as may be perceived by the human eye during daytime and nighttime hours.

   Ensure that the LED signal module is operationally compatible with existing or new supplied conflict monitors (NEMA TS-1, NEMA TS-2, Model 210, Model 2010, ITS Cabinet CMU and AMU)..

   Ensure that the LED Signal Module is operationally compatible with existing or new supplied load switches.

3. Electrical All Modules

   Supply LED signal modules that operate over the temperature range of –40 ºF to 165 ºF (-40 °C to 74 ºC).

   Ensure that the power factor is 90% or greater, at nominal rated voltage, at 77 ºF (25 °C), after 60 minutes of operation. Provide modules that do not exceed the maximum power consumption as shown in Table 925-18.

Table 925-18 Maximum Power Consumption (in Watts) at 25 C (77 F) & 74 C (165 F)						
Vehicle Indications	**Red**		**Yellow**		**Green**	
Temperature	**25 C**	**74 C**	**25 C**	**74 C**	**25 C**	**74 C**
12 Inch (300 mm) Circular	11	17	22	25	15	15
8 Inch (200 mm) Circular	8	13	13	16	12	12
12 Inch (300 mm) Arrow	9	12	10	12	11	11
Pedestrian Indications	**Hand**				**Man**	
Temperature	**25 C**	**74 C**	**25 C**	**74 C**	**25 C**	**74 C**
12 Inch (300 mm)	10	12			9	12

Ensure that the total harmonic distortion (THD) is less than 20% at rated voltage, at 77 ºF (25 °C) and that all LED traffic signal modules are in compliance with FCC noise regulations.

Ensure that the LED signal modules operate on line voltage, 120 V AC nominal, and are able to operate over the voltage range of 80 V AC to 135 V AC. Power Supply must be integral to the module.

Provide transient voltage suppression rated at 1,500 W for 1 millisecond and fusing with a maximum rating of 2 A to minimize the effect and repair cost of an extreme over voltage situation or other failure mode.

Ensure the lens of the modules that are polymeric and are not frosted have a surface coating to provide front surface abrasion resistance. Ensure the Red and Yellow section module lens are tinted to correspond with the wavelength (chromaticity) of the LED. Ensure Green Section modules are clear.

Ensure the modules allow a reduction of the intensity of the light output in response to an input from the traffic signal controller. Ensure the minimum light output when dimmed is not less than 30% of the minimum maintained luminous intensity as defined in the applicable Signal Head Module.

4. Circular Signal Modules

Supply LED Circular Signal Modules that fit in standard incandescent vehicle traffic signal housings and meet the Performance Specification of the ITE Vehicle Traffic Control Signal Heads: LED Circular Signal Supplement. In case of conflict, this specification shall govern. Before delivery of any modules supply certification that module is to be in compliance with these specifications. In addition substantiating documentation must be supplied from an independent test laboratory to show the product has passed design qualification testing in accordance with section 6.4 of the ITE Vehicle Traffic Control Signal Heads: LED Circular Signal Supplement. Ensure the report includes a Minimum Maintained Luminous Intensity chart for the module being provided that uses the same horizontal and vertical angles as shown in Table 1 of the ITE Vehicle Traffic Control Signal Heads: LED Circular Signal Supplement. Ensure all modules are provided with a signed copy of the production and test and inspection as detailed in section 6.3 of the ITE Vehicle Traffic Control Signal Heads: LED Circular Signal Supplement.

Supply lenses for that are made of ultraviolet stabilized polycarbonate. Ensure that the external lens surface is smooth, with no raised features, to, minimize the collection of dirt, diesel smoke, and other particulate contaminates, and to facilitate periodic cleaning.

Ensure that Circular Signal Modules have prominent and permanent markings to designate the proper orientation of the signal module in the traffic signal housing. This marking should be an up arrow or the word “UP” or “TOP”.

Ensure Circular Signal Module meets the photometric requirements as indicated and described in the ITE VTCSH LED Circular Signal Supplement.

Supply Red and Yellow LEDs that utilize AllnGap technology, either AS (Absorbing Substrate or TS (Transparent Substrate) and do not exhibit degradation of more than 30% of their initial light intensity following accelerated life testing (operating at 185 F (85 C) and 85% humidity, for 1000 hours). AlGaAs technology is not acceptable.

Supply Green LEDs that utilize gallium nitride technology.

5. Vehicle Arrow Signal Modules

Supply LED Arrow Signal Modules that fit in standard incandescent vehicle traffic signal housings and meet the Performance specification of ITE Vehicle Traffic Control Signal- LED Vehicle Arrow Traffic Signal Supplement.

Ensure that Arrow Signal Modules provided are omni directional and marked as OD so that they may be rotated at any angle. Ensure the Arrow modules Photometrics support the luminous intensity as indicated in table 925-19.

Before delivery of any modules supply certification that module is to be in compliance with these specifications. In addition substantiating documentation must be supplied from an independent test laboratory to show the product has

passed design qualification testing in accordance with section 6.4 of the ITE Vehicle Traffic Control Signal Heads: LED Circular Signal Supplement. Ensure the report includes a Minimum Maintained Luminous Intensity chart for the module being provided that uses the same horizontal and vertical angles as shown in Table 1 of the ITE Vehicle Traffic Control Signal Heads: LED Vehicle Arrow Traffic Signal Supplement. Ensure all modules are provided with a signed copy of the production and test and inspection as detailed in section 6.3 of the ITE Vehicle Traffic Control Signal Heads: LED Vehicle Arrow Traffic Signal Supplement.

Supply lenses for that are made of ultraviolet stabilized polycarbonate. Ensure that the external lens surface is smooth, with no raised features, to, minimize the collection of dirt, diesel smoke, and other particulate contaminates, and to facilitate periodic cleaning. Supply Red and Yellow LEDs that utilize AllnGap technology, either AS (Absorbing Substrate or TS (Transparent Substrate) and do not exhibit degradation of more than 30% of their initial light intensity following accelerated life testing (operating at 185 F (85 C) and 85% humidity, for 1000 hours). AlGaAs technology is not acceptable.

Supply Green LEDs that utilize gallium nitride technology.

Supply LED Arrow Signal Modules that fit in standard incandescent vehicle traffic signal housings and meet the "ITE Vehicle Traffic Control Signal Heads Part 3: Light Emitting Diode (LED) Vehicle Traffic Signal Modules". Use Table 925- 19 for all references to minimum maintained Intensity values. Ensure the LED arrow modules meet the required luminous intensity as shown in Table 925-19.

Table 925 - 19 Minimum Maintained Luminous Intensity Values for Arrow LED Indications

Angle					Angle				
Ver	Hor	12 inch (300 mm)			Ver	Hor	12 inch (300 mm)		
+	+ or -	Red	Yellow	Green	-	+ or -	Red	Yellow	Green
2.5	2.5	56.8	141.6	73.9	2.5	2.5	56.8	141.6	73.9
	7.5	47	117.1	61.1		7.5	47	117.1	61.1
	12.5	32.1	80.1	41.8		12.5	32.1	80.1	41.8
	17.5	18.2	45.3	23.7		17.5	18.2	45.3	23.7
	22.5	8.5	21.2	11.1		22.5	8.5	21.2	11.1
	27.5	3.3	8.2	4.3		27.5	3.3	8.2	4.3
7.5	2.5	47	117.1	61.1	7.5	2.5	47	117.1	61.1
	7.5	38.9	97	50.6		7.5	38.9	97	50.6
	12.5	26.7	66.5	34.7		12.5	26.7	66.5	34.7
	17.5	15.1	37.7	19.7		17.5	15.1	37.7	19.7
	22.5	7.1	17.7	9.2		22.5	7.1	17.7	9.2
	27.5	2.8	6.9	3.6		27.5	2.8	6.9	3.6
12.5	2.5	32.1	80.1	41.8	12.5	2.5	32.1	80.1	41.8
	7.5	26.7	66.5	34.7		7.5	26.7	66.5	34.7
	12.5	18.3	45.7	23.9		12.5	18.3	45.7	23.9
	17.5	10.5	26.1	13.6		17.5	10.5	26.1	13.6
	22.5	5.0	12.4	6.4		22.5	5.0	12.4	6.4
	27.5	-	-	-		27.5	-	-	-
17.5	2.5	18.2	45.3	23.7	17.5	2.5	18.2	45.3	23.7
	7.5	15.1	37.7	19.7		7.5	15.1	37.7	19.7
	12.5	10.5	26.1	13.6		12.5	10.5	26.1	13.6
	17.5	6.0	15.0	7.8		17.5	6.0	15.0	7.8
	22.5	2.9	7.2	3.8		22.5	2.9	7.2	3.8
	27.5	-	-	-		27.5	-	-	-
22.5	2.5	8.5	21.2	11.1	22.5	2.5	8.5	21.2	11.1
	7.5	7.1	17.7	9.2		7.5	7.1	17.7	9.2
	12.5	5.0	12.4	6.4		12.5	5.0	12.4	6.4
	17.5	2.9	7.2	2.8		17.5	2.9	7.2	2.8
	22.5	-	-	-		22.5	-	-	-
	27.5	-	-	-		27.5	-	-	-
27.5	2.5	3.3	8.2	4.3	27.5	2.5	3.3	8.2	4.3
	7.5	2.8	6.9	3.6		7.5	2.8	6.9	3.6
	12.5	-	-	-		12.5	-	-	-
	17.5	-	-	-		17.5	-	-	-
	22.5	-	-	-		22.5	-	-	-
	27.5	-	-	-		27.5	-	-	-

6. Pedestrian Signal Modules

   Supply LED Pedestrian Traffic Signal Modules that fit in standard pedestrian one section signal head manufactured in accordance with the ITE Pedestrian Traffic Control Signal Indications (PTCSI) housings and meet the ITE Pedestrian Traffic Signal Modules specification.

   Ensure that the Pedestrian Indications for the “Hand” and “Man” are filled in so as to provide a solid indication. Do not supply Pedestrian Indications for the Hand and Man that are “outlines”.

   Ensure that Pedestrian Signal Modules have prominent and permanent markings to designate the proper orientation of the signal module in the pedestrian signal housing. This marking should be an up arrow or the word “UP” or “TOP”.

Ensure Pedestrian Signal Module meets the photometric requirements as indicated and described in the ITE PTCSI LED Pedestrian Traffic Signal Module Specification.

Supply Portland Orange LEDs that utilize AllnGap technology, either AS (Absorbing Substrate or TS (Transparent Substrate) and do not exhibit degradation of more than 30% of their initial light intensity following accelerated life testing (operating at 185 F (85 C) and 85% humidity, for 1000 hours). AlGaAs technology is not acceptable.

Supply White LEDs that utilize InGaN technology.

B. Fabrication

General Provisions 101 through 150.

C. Acceptance

General Provisions 101 through 150.

D. Materials Warranty

Ensure that LED traffic signal modules and LED Pedestrian modules are performance warranted to be in compliance with the minimum intensity values as shown in Table 925-19. Provide independent laboratory test results indicating that LED indications satisfy the minimum intensity Standards for LED traffic signal modules, measured at 120 V AC and 165 ºF (74 °C), for a period of five (5) years.

Ensure that the manufacturer's name, part number, date code, and electrical characteristics of the LED signal module is visible on the assembly, and that each LED signal module is identified for warranty purposes.

925.2.16 LED Pedestrian and Countdown Signal Module

A. Requirements

This specification covers LED traffic signal module designed as a retrofit replacement for the message bearing surface of nominal 16" x 18" traffic signal housing built to the PTSCI Standard. The message bearing surface of the module consists of an overlapping "Hand" and "Man" Symbols with a numerical display of numbers from 00 to 99.

1. General Requirements

   Ensure that the unit supplied meets the applicable portions of section 925.15 of this specification.

   Ensure that the message numbers "00" to "99" are a minimum of 9 inches in height and consist of two rows of LEDs.

   Ensure the module fits in the Pedestrian Signal Housing without modification to the housing and requires no special tools for installation.

   Supply LED signal modules that are watertight when mounted in the traffic signal housing.

   Supply life data from the LED Signal Module manufacturer to calculate the expected useful life

   Supply modules with permanent markings for date of manufacture and date of installation.

2. Optical

   Provide test data from an independent laboratory to verify that the performance of the product meets current ITE requirements.

   Ensure that the individual LEDs are wired such that a catastrophic failure of one LED will result in the loss of not more than 5% of the signal module light output.

   The failure of a single LED in a string causes loss of light from only that LED, not the entire string or indication.

   Provide control circuitry that prevents the current flow through the LEDs in the "off" state to avoid any false indications as may be perceived by the human eye during daytime and nighttime hours.

   Ensure that the LED signal module is operationally compatible with existing or new supplied conflict monitors (NEMA TS-1, NEMA TS-2, Model 210, Model 2010, ITS Cabinet CMU and AMU.

   Ensure that the LED Signal Module is operationally compatible with existing or new supplied load switches.

   Ensure that the intensity of the LED signal module does not vary by more than 10% over the allowable voltage range as specified in the electrical section below.

   Ensure that the LED signal modules maintain not less than 90% of the required intensity, as defined by the ITE intensity Standards for LED traffic signal modules.

Ensure that each module provides an average luminous of at least 3750 candela per square meter of lighting surface for the “Hand" and 5300 candela per square meter for the Man symbol.

Ensure this over the temperature range of –40 ºF to 165 ºF (–40 ºC to + 74 ºC) at 120 V AC, when new and after four (4) years of field installation.

Provide an exterior lens which is uniform and frosted to reduce sun phantom effect.

3. Electrical

Supply LED signal modules that operate over the temperature range of –40 ºF to 165 ºF (-40 °C to 74 ºC).

Ensure that the power factor is 90% or greater, at nominal rated voltage, at 77 ºF (25 °C), after 60 minutes of operation.

Ensure that the total harmonic distortion (THD) is less than 20% at rated voltage, at 77 ºF (25 °C) and that all LED traffic signal modules are in compliance with FCC noise regulations.

Ensure that the LED signal modules operate on line voltage, 120 V AC nominal, and are able to operate over the voltage range of 80 V AC to 135 V AC.

Provide transient voltage suppression rated at 1,500 W for 1 millisecond and fusing with a maximum rating of 2 A to minimize the effect and repair cost of an extreme over voltage situation or other failure mode.

Ensure the modules allow a reduction of the intensity of the light output in response to an input from the traffic signal controller. Ensure the minimum light output when dimmed is not less than 30% of the minimum maintained luminous intensity as defined in the applicable ITE Signal Head Module.

4. Operation

Supply LED Modules which start counting when the flashing “Don Walk” Indication starts and will countdown to “0” when the steady “Don’t Walk” signal turns on. Ensure that the unit maintains a consistent countdown during a short power failure (i.e. Traffic Controller does not restart). Ensure that if Traffic Controller restarts that the countdown timer display is turned off until one full pedestrian clearance Cycle is timed. Ensure that the unit will turn off the counter if the steady Don’t Walk Display starts while the countdown timer is displaying a number other than 00.

B. Fabrication

General Provisions 101 through 150.

C. Acceptance

General Provisions 101 through 150.

D. Materials Warranty

Ensure that LED traffic signal modules and LED Pedestrian modules are performance warranted to be in compliance with the latest ITE and CALTRANS minimum intensity Standards for LED traffic signal modules, measured at 120 V AC and 165 ºF (74 °C), for a period of five (5) years.

Ensure that the manufacturer’s name, part number, date code, and electrical characteristics of the LED signal module is visible on the assembly, and that each LED signal module is identified for warranty purposes.

925.2.17 Blank-Out Signs

A. Requirements

Ensure that each sign provides a clearly visible and definable legend for 500 feet with ample safety factors.

Provide hardware to mount the sign on standard 1.5 inch (38 mm) pipe brackets or to mount directly to signal mast arms or span wire or as outlined in the Plans.

Ensure LED blankout signs conform to the requirements of section 9252.15 for LED modules and optical requirements

Supply blank-out sign~~s~~ face 30 inches x 36 inches (750 mm x 900 mm) that are capable of displaying one message at a time in one direction.

1. Case

Use a case formed from aluminum extrusion F1-6-E and a special aluminum door frame angle.

For Alloy 6063-T5, ensure that the wall is at least 0.075 inches thick and the corners and joints are at least 0.080 inches (2 mm) thick.

Use filler arc for all welding. Ensure all hinges and fastening hardware, nuts, bolts, fasteners on the housing and internal components are stainless steel

Use a BR-type take-apart door hinge and draw bolt. Furnish one P-15 1.5 inch (38 mm) hub on the top surface.

Prime the entire case with zinc chromate, bake the inside with two coats of non-yellowing white, and paint the outside with two coats of highway yellow.

2. Electrical

Ensure that all blankout signs are LED and conform to current ITE Standards. Supply all signs with the necessary mounting hardware to provide for mounting as shown on the Plans. Provide mounting for one way or two way configurations.

Obtain approval for messages and letter dimensions from the Engineer.

3. Sun Phantom Screen

Attach to each sign a heavy-duty aluminum louver-type sun phantom screen covering the entire sign face. Slant the louvers down enough to eliminate the sun glare without obstructing the view of the sign face.

4. Painting

Paint the signal surfaces, inside and out, with two coats of oven-baked enamel in addition to the primer coat. Paint the non-illuminated portions of the signal face black. Paint the housings, brackets, fittings, and etc. highway yellow.

5. Lens

Use a fabricated, three-section Plexiglas lens clear face, with or without legend, which can accept a silk-screened legend on the first surface. Provide a thickness of at least 0.31 inches (8 mm).

6. Legend

Acceptable legends are as follows***:***

Text:

- NO LEFT TURN
- NO RIGHT TURN
- SIGNAL AHEAD
- NO TURNS

Symbols:

- NO LEFT TURN SYMBOL
- NO RIGHT TURN SYMBOL

B. Fabrication

General Provisions 101 through 150.

C. Acceptance

General Provisions 101 through 150.

D. Materials Warranty

Refer to Subsection 925.2.01.D for Materials Warranties.

925.2.18 Lane-Use Control Signal

A. Requirements

Ensure that all signals are LED and conform to current ITE Standards. Supply all signals with the necessary mounting hardware to provide for mounting as shown on the Plans. Provide mounting for one way or two way configurations.

1. General Requirements

a. Weight

Ensure that one-way units weigh not more than 50 pounds (23 kg) and two-way units weigh not more than 60 pounds (27 kg), regardless of messages.

b. Color

Ensure that the color of lane-use control signal indications is clearly visible for 0.25 mile (0.38 km) at all times under normal atmospheric conditions. Provide lane-use control signals with a visibility angle of a minimum of 60 degrees.

c. Housing

Ensure that the housing of each signal is polycarbonate or a one-piece corrosion resistant aluminum alloy die casting or equal and meets current related ASTM Specifications.

Ensure that all configurations are balanced to provide a plumb hanging unit. Ensure that all components are readily and easily accessible from the open door.

d. Housing door

Ensure that the housing door is one-piece corrosion resistant aluminum or polycarbonate and meets current related ASTM Specifications.

Provide two substantial door hinges with stainless steel hinge pins. Ensure hinges are on the left side of each section with a latch boss on the right side.

Provide stainless steel dual eye bolt latches or similar approved devices to securely close and latch the housing door. Equip the housing or door with a continuous molded neoprene gasket to make the interior of the unit dustproof and waterproof.

e. Wiring

Provide each signal housing with a complete terminal board. Ensure that one side of terminal strip accommodates socket leads and the other side accommodates field wires. Ensure that the terminal board provides totally separate wiring of each symbol.

Ensure each lamp is separately wired to a terminal block located in each housing. Provide each lamp holder socket with color-coded leads.

For combination symbols, color-code socket leads separately to distinguish between red “X”, yellow “X” or downward arrow symbols. Provide leads that are No. 14 AWG type THW, 600 V AC, and fixture wire with 194 ºF (90 °C) thermoplastic insulation.

f. Visors

Provide visors not less than 12 inches (300 mm) long for multiple unit and 7 inches (175 mm) long for single unit signals for each signal face.

Ensure that the visors are constructed of sheet aluminum or polycarbonate and encompass the top and sides of each section.

g. Painting

Paint all signal surfaces, inside and out, with two coats of oven baked enamel in addition to the primer coat. Paint the insides of the visors flat black.

The non-illuminated portions of the signal face black or dark gray and all housings, brackets and fittings highway yellow.

h. Hardware and fittings:

Supply all necessary fittings, pipe brackets, hangers, hubs, etc. for the type of mounting specified. Ensure all fittings are aluminum or galvanized coated to prevent rust and corrosion.

i. Sun -phantom screen

Provide each signal face with a screen, which substantially counteracts sun phantom effect.

2. Signal Display

Ensure that the symbols, which are on an opaque black or dark gray background, meet ITE requirements and are blacked out when not illuminated.

3. LED Optical System

a. Ensure that the LEDs supplied for the lane use control signal meet the Specifications for a type module as required in section 925.2.14. Ensure that each separate color indication in a sign face is illuminated by independent LEDs

b. Ensure that the green arrow indication does not utilize the same termination points as any “X" indication.

c. Ensure that total power required for any single indication does not exceed 250 W.

d. Ensure that all modules are contained behind a water tight signal face or lens assembly.

e. Ensure that the entire optical system is weatherproof and is not vulnerable to extremes in temperature or moisture.

B. Fabrication

General Provisions 101 through 150.

C. Acceptance

General Provisions 101 through 150.

D. Materials Warranty

Refer to Subsection 925.2.01.D for Materials Warranties.

925.2.19 Pedestrian Push Button Station

A. Requirements

Ensure that Pedestrian push buttons are of tamperproof construction and consist of a direct push type button and single momentary contact switch in cast aluminum housing. The pushbutton cover shall also be of cast aluminum. The housing and cover shall be free of voids, pits, dents, molding sand excessive foundry grinding marks. Exterior surface shall be smooth and cosmetically acceptable, free of molding fins, cracks and other exterior blemishes.

Provide housing and cover with an alodine conversion coating so as to provide a proper base for paint adhesion. Finish the housing with baked enamel and paint the push button housing and Pedestrian heads highway yellow (unless otherwise specified by the Engineer).

The assembly shall be capable of being mounted to a flat or curved surface. Ensure the assembly includes the appropriate sign as shown in the Plan Details.

Ensure that any screws or bolts are stainless steel and vandal proof. Provide the unit with a 0.5 inch (13 mm) threaded opening with plug.

Ensure that the assembly is weatherproof and so constructed that when properly installed, it will be impossible to receive an electrical shock under any weather condition.

Ensure that Pedestrian Pushbuttons are integrated with a sign as shown in the standard details. Provide the sign size as indicated on the Plans. GDOT will allow an adapter of cast aluminum. GDOT will allow one of three options:

1. The use of a 9 inch (229 mm) by 15 inch (381 mm) cast aluminum plate adapter to upgrade existing push button station, 9 inch (229 mm) by 12 inch (305 mm).
2. Push button station assembly 9 inch (229 mm) by 15 inch (381 mm) sign w/round pushbutton adapter.
3. The use of a 9 inch (229 mm) by 15 inch (381 mm) cast aluminum plate adapter to upgrade existing push button station, 5 inch (127 mm) by 7 inch (178 mm).

Ensure that the Pedestrian Push Button sign adapter plate is, die-cast aluminum and separate, such that it is interchangeable.

Ensure that the Pedestrian Push Button sign adapter assembly be, die-cast aluminum and attached, prior to shipping.

The plate shall be finished with highway yellow baked enamel paint (unless otherwise specified by the Engineer).

Ensure the button assembly is configured to be a mechanical switch with ball and 2 inch mushroom plunger.

B. Fabrication

General Provisions 101 through 150.

C. Acceptance

General Provisions 101 through 150.

D. Materials Warranty

Refer to Subsection 925.2.01D for Materials Warranties.

925.2.20 Signal Head Back Plate

A. Requirements

Ensure that each back plate is designed to properly shield a traffic signal head from background distractions for better visibility.

Design the back plates to extend beyond the signal head to a minimum of 6 inches (150 mm) on all sides and have all corners rounded with minimum 2 inch (50 mm) radii.

Construct the back plates from~~,~~ UV stabilized polycarbonate or, ABS plastic material with a finished color of flat black. Ensure that polycarbonate back plates are at least 0.15 inches (4 mm) thick; ABS back plates are at least 0.05 inches (1 mm) thick and metal back plates are at least 0.05 inches (1 mm) thick.

Design the back plates with predrilled holes to provide for simple attachment to the specified brand, size and configuration of traffic signal head with all mounting hardware included.

Ensure that the back plates do not interfere with the signal mounting hardware. Ensure that the back plates include louvers.

B. Fabrication

General Provisions 101 through 150.

C. Acceptance

General Provisions 101 through 150.

D. Materials Warranty

Refer to Subsection 925.2.01.D for Materials Warranties.

925.2.21 Signal Head Visors

A. Requirements

Typically, visors are one piece tunnel type and removable unless specified otherwise in the signal Plans.

Ensure that visors are polycarbonate and at least 9 inches (225 mm) deep for 12 inch (300 mm) heads. Special angle visors are full circle with the long side at least 18 inches (450 mm) deep. Ensure that visors provide a positive method of attaching to the door of the signal head that do not allow rotation. An acceptable method is to provide tabs that use stainless steel screws.

Unless otherwise specified by the Engineer, provide black signal head visors.

If special tools are required for louver adjustment one shall be provided per project.

B. Fabrication

General Provisions 101 through 150.

C. Acceptance

General Provisions 101 through 150.

D. Materials Warranty

Refer to Subsection 925.2.01.D for Materials Warranties.

925.2.22 Signal Head Louvers

A. Requirements

Ensure that louvers (with the vanes oriented vertically) are directional with a 7-degree cutoff right of center. Rotating the louver 180 degrees will produce a 7-degree cutoff left of center.

Provide twelve-inch (300 mm) louvers with 5 vanes. Finish all louvered surfaces in flat black. Ensure that programmable louvers are directional with a 7-degree cutoff and that all louver surfaces have a flat black finish.

Ensure that the units can be installed and programmed in accordance with the manufacturer's instruction on visors that are recommended by the manufacturer.

Have the programmable louver display approved by the Engineer prior to placing the signal in stop and go operation.

B. Fabrication

General Provisions 101 through 150.

C. Acceptance

General Provisions 101 through 150.

D. Materials Warranty

Refer to Subsection 925.2.01.D for Materials Warranties.

925.2.23 Hardware For Mast Arm Mounting

A. Requirements

1. Ensure that signal heads are rigidly mounted to the mast arm. Provide mounting hardware that is in accordance with the following:Adjustability

   Ensure the mounting bracket is completely adjustable such that it allows; rotational adjustment about the bracket axis; vertical adjustment; rotational adjustment about the Mast Arm; and rotational adjustment from the vertical plane.
2. Attachment

   Ensure the bracket is provided with air-craft grade galvanized steel cables with stainless steel fastening hardware and make a minimum of two wraps around to fasten the bracket to the arm. Ensure the bracket is easily adjustable to fit all sizes of round, elliptical or other shaped structure without special tools or equipment.
3. Signal/Sign Accomodations

   Ensure the bracket attaches to the signal or sign to assure maximum rigidity. When clamping the signal top and bottom, ensure a standard bracket accommodates all major signal manufacturers signal for 3, 4 and 5 section signal head configurations.
4. Wiring

   All electrical wiring shall be completely concealed with the bracket. The vertical support shall be a gusseted “C” shaped extruded aluminum tube to accommodate the signal cable regardless of vertical positioning of the tube.
5. Materials

   The upper and lower arms shall be cast 319 aluminum or equivalent. The lower arm shall be internally threaded to accommodate the threaded vertical support tube. Ensure the lower arm is furnished with plastic covers which slide and snap into place. Both arms shall have 72 tooth serrations cast into the arm to assure a positive lock with signal housing and shall be secured about their rotational axis with setscrews. Ensure the arms have a tri-bolt arrangement for attachment to the signal housing.
   Ensure the vertical support is gusseted tube extruded from 6063-T6 aluminum. Ensure the tube includes a vinyl closure strip.
   Ensure the mast arm clamp assembly is cast from 713 aluminum alloy or equivalent. Provide an assembly that allows for 360 degrees of rotation with no internal bracing obstructing the center opening. Provide two air-craft grade galvanized steel cables that have minimum tensile strength of 100,000 PSI.
   Ensure that each bracket is complete with all necessary bolt, washers, gaskets and miscellaneous items to allow assembly of the signal to the bracket and the bracket to the mast arm. Ensure all aluminum parts have an Aldine finish. All non stainless steel parts shall have a yellow zinc di-chromate or galvanize finish.

This item will be approved upon submittal of catalog cuts. Refer to Standard Detail Drawings for additional information.

B. Fabrication

General Provisions 101 through 150.

C. Acceptance

General Provisions 101 through 150.

D. Materials Warranty

Refer to Subsection 925.2.01D for Materials Warranties.

925.2.24 Hardware For Signal Head Pole Mounting

A. Requirements

Ensure this item consists of hardware adequate for the specific mounting. As a minimum provide the following hardware. 1 ½ inch pipe nipples of die cast aluminum that are a minimum of 12 inches and threaded with 1 ½ inch NPS threads on either end. On the upper and lower arm there shall be a serrated 72 tooth boss with set screw. The upper arm shall have a neoprene gasket to provide weather tight fit. Hub plates for pole mounting shall be provided and they shall be appropriate for the particular mounting (round or flat). Hardware shall die cast aluminum alloy 380 or extruded. All die cast parts shall be cleaned in an alkaline cleaning compound Extruded parts shall have an alodine conversion coating to provide proper base for paint adhesion. The assembly is to be painted federal yellow and baked in an oven. Ensure the assembly is provided with all required hardware. All other hardware shall be stainless steel.

B. Fabrication

General Provisions 101 through 150.

C. Acceptance

Ensure that this item consists of hardware as shown in the standard details.

This item will be approved upon submittal of catalog cuts.

D. Materials Warranty

Refer to Subsection 925.2.01.D for Materials Warranties.

925.2.25 Balance Adjuster

A. Requirements

Ensure this item consists of hardware that is cast from 316 Stainless Steel or 65-45-12 Ductile Iron or equivalent. Ensure castings are free of voids, pits, dents, molding sand and excessive grinding marks. Exterior surface shall be cosmetically acceptable and free of molding fins, cracks and other exterior blemishes. All hardware shall be supplied and be stainless steel or galvanized.

B. Fabrication

General Provisions 101 through 150.

C. Acceptance

Ensure this item consists of hardware as shown in the Standard Details. This item will be approved upon submittal of catalog cuts.

D. Materials Warranty

Refer to Subsection 925.2.01.D for Materials Warranties.

925.2.26 Hardware For Mounting 12 Inch (300 mm) Pedestrian Head

A. Requirements

Ensure this item meets the same criteria as 925.2.24.A and is in accordance with the Standard Details.

B. Fabrication

General Provisions 101 through 150.

C. Acceptance

Ensure this item consists of hardware as shown in the Standard Details. This item will be approved upon submittal of catalog cuts.

D. Materials Warranty

Refer to Subsection 925.2.01.D for Materials Warranties.

925.2.27 Pedestal Pole

A. Requirements

The Pedestal poles support vehicle signal heads, pedestrian signal heads, IVDS and push button. Furnish Pedestal poles according to type and overall length.

Pedestal pole for vehicle display for one lane ramp metering operation shall be constructed to support one 12" signal head and one 8" signal head assembly as shown in the Plans.

Pedestal pole for ramp meter advance warning sign and flashing beacon shall be constructed to meet the sign manufacturer's structural requirements. Pedestal pole mounting adapter shall rigidly attach to the sign case's structural bracing. Cable entrance to the sign case shall be through the inside of the pole.

Ensure that all poles are made of one continuous piece of bare finish spun aluminum from top to base connection for the entire height of the pole.

The shaft, of appropriate shape, may or may not be uniformly tapered from butt to tip. A pole used to support only a traffic signal may be tapered.

Fabricate pole caps, when required, of cast material, and secure in place with set-screws.

B. Fabrication

General Provisions 101 through 150.

C. Acceptance

General Provisions 101 through 150.

D. Materials Warranty

Refer to Subsection 925.2.01.D for Materials Warranties.

925.2.28 Pedestal Pole Base

A. Requirements

Ensure that all design radii are smooth and intact. Ensure that the exterior surface finish is smooth and cosmetically acceptable by being free of molding fins, cracks and other exterior blemishes.

Fabricate from new aluminum ingot. Do not use scrap materials.

Minimum requirements are as follows:

• ALUMINUM ALLOY NO.	319	ELONGATION [% IN 2 IN. (50 mm)]	2.5
• TENSILE STRENGTH, KSI (MPa)	34 (234)	BRINELL HARDNESS	85
• YEILD STRENGTH, KSI (MPa)	19 (131)	SHEAR STRENGTH, KSI (MPa)	232 (1600)

1. Ensure this item consists of square cast aluminum with bare finish, and has a minimum weight of 21 pounds (9.5 kg). Thread the upper end to receive a 4 inch (100 mm) National Pipe Thread (NPT) pipe shaft.
2. Design the base so that it may be fastened to a foundation with four (4) 0.75 inch (19 mm) anchor bolts located 90 degrees apart on the bottom of the base. Provide slots in the bottom of the base 1.5 inch (38 mm) wide and 2.5 inches (63 mm) long measured along the circumference of the bolt circle, allowing a proper fit even if the bolts are placed slightly off center.
3. Design the base to accommodate bolt circles of a minimum of 12 inches (300 mm) through a maximum of 14.5 inches (363 mm) and anchor bolts with a minimum of 0.63 inches (16 mm) through 1 inch (25 mm) diameter.
4. Design the base with a removable plastic door. Ensure that the door opening is free of burrs and sharp edges and is no less that 8.5 inches (213 mm) square. Attach the door to the base using one socket button head screw to prevent unauthorized entry.
5. Ensure that the base meets or exceeds current AASHTO breakaway requirements. Provide test reports from an FHWA approved independent laboratory certifying that the base has been tested and meets all applicable requirements. In addition, supply a statement of certification from the FHWA stating such tests have been accepted and approved.
6. In order to prove structural soundness, provide a certification from a recognized independent structural laboratory certifying that the base will withstand a bending moment of 10,750 ft-lbs (14 575 N-m).

7. Ensure that the door is injection molded from ABS plastic to deter vandalism and theft, and has the following properties:

TEST	ASTM METHOD	VALUE
Tensile @ Yield [0.13 inches (3 mm)]	D638	6600 psi (45 500 kPa)
Flexural @ Yield	D790	11,000 psi (75 850 kPa)
Rockwell Hardness	D785	101 (R Scale)
Notched Izod	D256	5 ft-lb./in. (0.03 N-m/mm)

8. Ensure that the door exhibits the following properties:
   - Has an edge thickness of 0.25 inches (6 mm) and a minimum thickness of 0.156 inches (4 mm)
   - Contains flame-retardant material, meeting or exceeding underwriters laboratories UL 94 test H.B
   - Gray aluminum tone in color, unless otherwise specified
   - Contains ultra-violet inhibitors and stabilizers for protection against UV degradation
   - Is injection molded with a smooth front finish
   - Has flat and straight surfaces without blisters, buckling or warping; have reinforcing ribs
   - Contains two (2) injection molded lugs on the bottom of the door with slots of the proper width and depth to fit the base door opening.
9. Supply the base with a set of four (4) anchor bolts, 0.75 inch (19 mm) diameter by 18 inches (450 mm) in length, material per ASTM A 572A 572M, Galvanized per ASTM A 153/A 153M. Supply (1) hex nut and (1) flat washer with each bolt.

B. Fabrication

General Provisions 101 through 150.

C. Acceptance

General Provisions 101 through 150.

D. Materials Warranty

General Provisions 101 through 150.

925.2.29 Pedestal Pole Foundation Anchor Assembly

A. Requirements

Provide Foundation Anchor assembly that is 4 inches (100 mm) in diameter by 56 inches (1400 mm) with a single helical blade and a square fixed baseplate with combination underside holt-head retainer and dirt scrappers allowing flush- mount with the ground.

Provide Baseplate that is steel and conforms to ASTM A-36 material. Provide pipe with helical blade that is manufactured from ASTM A-53ERW Grade B Steel. Ensure 4 inch pipe has 2 inch (50 mm) by 3 inch (75mm) entrance hole 18 inches below the steel plate. Ensure the anchor assembly is hot dipped galvanized finish after fabrication and complies with ASTM A-123.

Ensure base plate has four slotted mounting holes to fit bolt circles from 7 ¾ inch (195mm) to 14 ¾ inch (375 mm. Provide 4 slotted mounting hole with a ¾ inch keyhole slot to permit bolt installation and replacement from the top surface without digging under the baseplate.

Ensure assembly is furnished with;

- Quantity of four ¾ inch(20 mm) -10NC x 3 inch(75 mm) square head galvanized ASTM 325 anchor bolts;
- Quantity of four ¾ inch(20 mm) plain flat galvanized washers;
- Quantity of four 3/16 inch(5 mm) thick galvanized plate washers;
- and Quantity of four ¾ inch (20 mm) galvanized hex nuts.

B. Fabrication

General Provisions 101 through 150.

C. Acceptance

General Provisions 101 through 150.

D. Materials Warranty

Refer to Subsection 925.2.01.D for Materials Warranties.

925.2.30 Timber Poles

A. Requirements

Ensure that all timber poles meet the requirements of Section 861. Poles must be inspected and tested by the GDOT Office of Materials and Research and hammer stamped by the inspector.

Ensure that all poles have a brand or stamp 10 feet (3 m) from the butt that notes the type wood, date of manufacture, manufacturer, class and length.

Ensure that all timber poles that have guy attachments or support span wire or arms that suspend signal heads over the roadway or sidewalk are Class II.

Poles that support loop lead-in, messenger or communications cable that does not have guy attachments may be Class IV size.

Ensure that all poles meet the requirements in the table below unless otherwise noted on the traffic signal Plans or list of materials.

Class	Nominal Length, ft (m)	Minimum Circumference At 6 feet (2.4 m) from butt, in. (mm)
II	30 (9)	34.0 (850)
II	35 (10.5)	36.5 (913)
II	40 (12)	38.5 (963)
II	45 (13.5)	40.5 (1013)
II	50 (15)	42.0 (1050)
IV	30 (9)	29.5 (738)
IV	35 (10.5)	31.5 (788)
IV	40 (12)	33.5 (838)

IV	45 (13.5)	35.0 (875)

B. Fabrication

General Provisions 101 through 150.

C. Acceptance

General Provisions 101 through 150.

D. Materials Warranty

Refer to Subsection 925.2.01.D for Materials Warranties.

925.2.31 Steel Strain Poles

A. Requirements

Ensure that steel strain poles conform to Section 639 and include hardware for span wire attachments, anchor base, and anchor bolts for the purpose of supporting span wire suspended signs and/or signals.

For signal supports, ensure that the opening at the top and bottom of the pole is large enough to allow all wiring into and out of pole. Do not strap conduit to strain pole because of insufficient opening allowances.

B. Fabrication

General Provisions 101 through 150.

C. Acceptance

General Provisions 101 through 150.

D. Materials Warranty

Refer to Subsection 925.2.01.D for Materials Warranties.

925.2.32 Pre-Stressed Concrete Strain Pole

A. Requirements

Ensure that Pre-stressed concrete strain poles for overhead signs and signal supports conform to Section 500.

For signal supports, ensure that the opening at the top and bottom of the pole is large enough to allow all wiring into and out of pole. Do not strap conduit to strain pole because of insufficient opening allowances.

B. Fabrication

General Provisions 101 through 150.

C. Acceptance

General Provisions 101 through 150.

D. Materials Warranty

Refer to Subsection 925.2.01.D for Materials Warranties.

925.2.33 Traffic Signal Pull Box

A. Requirements

Ensure that traffic signal pull boxes a matched assembly of a box and cover from the same manufacturer.

For all pull boxes except Types 4 and 5, use pull boxes manufactured in a single unit for the full depth required in the size in an open bottom configuration. Do not use stacked pull boxes.

For pull boxes Types 4 and 5, use stacked pull boxes as shown in the Plans, where the top unit is open bottom and the bottom unit is closed bottom manufacture. In the bottom unit provide a drain hole.

Provide pull boxes that are constructed of fiberglass-reinforced composite polymer concrete product or steel wire reinforced portland cement concrete product with a concrete gray or tan color.

Ensure that pull boxes meet all requirements of ANSI 77 2002 Tier 15. Provide compliance test documentation.

Provide a ¼-inch galvanized wire mesh between the gravel base and the open bottom box or closed bottom box drain hole for all pull box types.

Use Type 1 pull boxes [12 inches x 12 inches (300 mm x 300 mm)] for loop lead-ins. When loop lead-ins and splices and other cables are required, use Type 2 pull boxes [11 inches x 18 inches (275 mm x 450 mm)] or Type 3 pull boxes [17 inches x 30 inches (425 mm x 750 mm)].. Use Type 4, 4S, 5, 5S, 6 and 7 pull boxes for fiber optic cable. Furnish one-piece covers for all pull boxes except Types 5, 5S, and 7. Furnish two-piece covers for Types 5, 5S, and 7.

Furnish covers with a skid-resistant surface with a minimum coefficient of friction of 0.5 when tested in accordance with ASTM C1028.

Furnish covers with stainless steel hold-down bolts, minimum size 3/8-16.

Furnish covers with the logo "TRAFFIC SIGNAL" for pull box Types 1, 2 and 3, and with other pull box types when installed for traffic signal cabling at a traffic signal.

Unless otherwise shown in the Plans or installed for traffic signal cabling at a traffic signal, furnish covers with the logo "GDOT COMMUNICATIONS" for pull box Types 4, 4S, 5, 5S, 6 and 7.

Furnish pull box Types 4, 5, 6 and 7 with factory-installed cable racks and rack hooks.

Cable racks and rack hooks shall be hot-dipped galvanized steel.

Each cable rack rail shall be minimum 24 inches (600 mm) in length with rack hook mounting holes on the entire length. Install two racks on each of the pull box long side walls. For Type 4 and 5 pull boxes only, each cable rack rail may be comprised of two minimum 12 inch (300 mm) units installed on the stacked box side walls.

Mount cable racks to the side walls using minimum 3/8-16 stainless steel hardware.

Furnish a minimum of four rack hooks, minimum 6 inch length (150 mm), per pull box. Furnish an additional four rack hooks for each through cable stored in the pull box. Furnish an additional two rack hooks for each splice closure stored in the pull box.

Furnish Types 6 and 7 pull boxes with factory-installed non-metallic conduit terminators for Sch. 40 and SDR11 2-inch (53 mm) of the quantity and location as shown in the Plans, or for a different conduit size if shown in the Plans. Terminator bodies shall be manufactured from high-impact polystyrene or approved equivalent.

When joining conduits of dissimilar materials, furnish an airtight and watertight conduit adhesive intended for direct-contact underground use.

Refer to the Standard Detail Drawings and the Traffic Signal Design Manual for further information.

B. Fabrication

General Provisions 101 through 150.

C. Acceptance

General Provisions 101 through 150.

D. Materials Warranty

Refer to Subsection 925.2.01.D for Materials Warranties.

925.2.34 Prefabricated Controller Cabinet Base

A. Requirements

Provide controller cabinet bases that are precast polymer concrete and grey in color. Ensure the prefabricated controller cabinet base has the correct bolt pattern for the cabinet(s) to be installed. Provide prefabricated controller cabinet bases with UNC inserts as shown on plans. UNC inserts shall be stainless steel and be designed for a minimum of 15 foot-pounds of torque.

Ensure that prefabricated controller cabinet bases are designed to withstand wind loading of 125 mph (200 km/h) with the cabinets as shown in the Plans mounted. Ensure that prefabricated controller cabinet bases are designed for a minimum static vertical load of 5,000 pounds over a 10 inch (254 mm) by 10 inch (254 mm) by 1 inch (25 mm) thick distribution plate and withstand a tested load of 7,500 pounds. Ensure that prefabricated controller cabinet bases are designed for a minimum lateral load of 1800 pounds over an 18 inch (457 mm) by 24 inch (610 mm) by 1 inch (25 mm) steel plate applied to the longest side and shall withstand a tested load of 2700 pounds. The prefabricated controller cabinet base shall withstand a 50 foot-pound impact administered with a 12-pound weight having a "C" tup without puncture or splitting, in accordance with ASTM D2444. The prefabricated controller cabinet base shall meet the

requirement of ASTM D543 Section 7, Procedure 1. Provide a copy of all test reports from a certified lab along with the materials certification package.

B. Fabrication

General Provisions 101 through 150.

C. Acceptance

General Provisions 101 through 150.

D. Materials Warranty

Refer to Subsection 925.2.01.D for Materials Warranties.

925.2.35 Loop Lead-In Cable

A. Requirements

Ensure that loop detector lead-in cable is No. 18 AWG, 3-pair shielded cable that meets IMSA specification #50-2.

Ensure that identification markings are stamped on the jacket.

B. Fabrication

General Provisions 101 through 150.

C. Acceptance

General Provisions 101 through 150.

D. Materials Warranty

Refer to Subsection 925.2.01.D for Materials Warranties.

925.2.36 Loop Detector Wire

A. Requirements

Ensure that loop detector wire, meets IMSA specification 51- -3 and is 14 AWG..

Ensure that identification markings are stamped on the cable jacket.

B. Fabrication

General Provisions 101 through 150.

C. Acceptance

General Provisions 101 through 150.

D. Materials Warranty

Refer to Subsection 925.2.01.D for Materials Warranties.

925.2.37 Aerial (Lashed) & Duct Signal Cable

A. Requirements

Ensure that aerial (lashed) or duct (conduit) No. 14 AWG, stranded, 7-conductor, with black polyethylene (PE) jacket and 600 V AC rating meets IMSA specification #20-1. Use conductors that are straight, not twisted pairs.

B. Fabrication

General Provisions 101 through 150.

C. Acceptance

General Provisions 101 through 150.

D. Materials Warranty

Refer to Subsection 925.2.01.D for Materials Warranties.

925.2.38 Self-Supporting Twisted Pair Aerial Signal Communications Cable

A. Requirements

Ensure that self-supporting, figure eight, aerial signal communications cable, No. 19 AWG, stranded 6-pair conductors is rated at 600 V AC and meet IMSA specification #20-4-1984.

Use conductors that are twisted pairs with copper tape shield under a black PE jacket. Ensure that messenger strand is 0.25 inch (6 mm), 7-strand and conforms to ASTM A 475 Siemens-Martin grade or better with a Class A coating.

B. Fabrication

General Provisions 101 through 150.

C. Acceptance

General Provisions 101 through 150.

D. Materials Warranty

Refer to Subsection 925.2.01.D for Materials Warranties.

925.2.39 Underground Feeder Cable, Type UF

A. Requirements

Ensure that underground feeder cable, Type UF w/ground has two (2) conductors with pvc/nylon jacket and a minimum 600 V AC rating per UL #493. Two-conductor, No. 6 AWG wire may be used.

B. Fabrication

General Provisions 101 through 150.

C. Acceptance

General Provisions 101 through 150.

D. Materials Warranty

Refer to Subsection 925.2.01.D for Materials Warranties.

925.2.40 Messenger & Guy Strand (Span Wire)

A. Requirements

Ensure that all messenger and guy strand (span wire) conforms to ASTM A 475 Extra High Strength grade or better with a Class A coating, 7-wire span wire.

Ensure ¼-inch (6 mm) Messenger & guy strand shall be used to support interconnect cable or as tether spans.

Messenger & guy strand 0.31 inch (7 mm) shall be used only where it is essential to match an existing 0.31inch (7 mm) span wire that will not be replaced as part of a new installation.

Ensure all span wire for signal heads, blank out sign, optically programmed heads, lane control signs, standard, aerial or sidewalk guys uses a minimum Messenger & guy strand 0.38 inch (9 mm) as a minimum size.

B. Fabrication

General Provisions 101 through 150.

C. Acceptance

General Provisions 101 through 150.

D. Materials Warranty

Refer to Subsection 925.2.01.D for Materials Warranties.

925.2.41 Power Disconnect Box

A. Requirements

Ensure that all power disconnect boxes are NEMA 3R 240 V AC, 60 Amp Phase 1(metal non-fused 2 pole). Ensure the disconnect box is supplied with a padlock keyed as per directions of District Signal Engineer. Provide power disconnect box that is not fused and does not have a circuit breaker. Supply with a service grounding kit.

B. Fabrication

General Provisions 101 through 150.

C. Acceptance

General Provisions 101 through 150.

D. Materials Warranty

Refer to Subsection 925.2.01.D for Materials Warranties.

925.2.42 Cable Ties

A. Requirements

Ensure that all cable ties are nylon, ultraviolet resistant black and consist of the following as a minimum:

Nominal Length	8 inches (200 mm)
Width	0.30 inches (7 mm)
Tensile Strength	120 pounds (55 kg)

B. Fabrication

General Provisions 101 through 150.

C. Acceptance

General Provisions 101 through 150.

D. Materials Warranty

Refer to Subsection 925.2.01.D for Materials Warranties.

925.2.43 Lashing Rod

A. Requirements

Ensure that all lashing rods are sized in accordance with messenger and cable(s) diameters to be supported. Provide lashing rods that are of the same material as the messenger or guy strand.

B. Fabrication

General Provisions 101 through 150.

C. Acceptance

General Provisions 101 through 150.

D. Materials Warranty

Refer to Subsection 925.2.01.D for Materials Warranties.

925.2.44 Stainless Steel Lashing Wire

A. Requirements

Provide lashing wire that is type 316 stainless steel with 0.045 inch (1 mm) diameter.

B. Fabrication

General Provisions 101 through 150.

C. Acceptance

General Provisions 101 through 150.

D. Materials Warranty

Refer to Subsection 925.2.01.D for Materials Warranties.

925.2.45 Guy Guards

A. Requirements

Ensure that all guy guards are high impact resistant PVC with ultraviolet stabilizers added for retention of color. Ensure that insulators attach to the guy so that they cannot easily be removed. Use guy insulators which are yellow unless otherwise directed.

B. Fabrication

General Provisions 101 through 150.

C. Acceptance

General Provisions 101 through 150.

D. Materials Warranty

Refer to Subsection 925.2.01.D for Materials Warranties.

925.2.46 Guy Strain Insulators

A. Requirements

Ensure guy strain insulators are protected from the environment including the effects of voltage, ultraviolet rays, and acid rain by a fully bonded, electrically tack-free, and impenetrable silicone rubber sheath. Each insulator shall be UL proof tested, and permanently marked to show date of test.

B. Fabrication

General Provisions 101 through 150.

C. Acceptance

General Provisions 101 through 150.

D. Materials Warranty

Refer to Subsection 925.2.01.D for Materials Warranties.

925.2.47 Universal Closure Kit

A. Requirements

Supply a Universal Signal Closure Kit to seal the signal head at either the top or bottom. Ensure that the kit will fit any manufacturer's signal head (top or bottom) without the use of special tools or modification.

1. Ensure that the gasket is 60-70 durometer neoprene.
2. Ensure that Closure Cap is injection molded ABS plastic. The plastic is to be loaded with UV stabilizers.
3. Ensure that Adapter Bar is made so that it will secure the closure cap and compensate for varying thickness of signal heads.
4. Provide two # 10 (9mm) screws to fit any manufacturer's signal head. Ensure that one screw is 0.75 inches (19 mm) in length and the second screw is 1 inch (25 mm) in length.
5. Pack each assembly in a clear plastic bag. Mark the bag with the manufacturer's name and part number. Include the Universal Signal Closure Kit in a package containing the span wire clamp and Tri-Stud wire entrance fitting.
6. Ensure that the Closure Cap is molded to closely match the color of the signal head (Federal Yellow). The adapter bar and screws are to be zinc plated steel.

B. Fabrication

General Provisions 101 through 150.

C. Acceptance

General Provisions 101 through 150.

D. Materials Warranty

Refer to Subsection 925.2.01.D for Materials Warranties.

925.2.48 Cast Aluminum Span Wire Clamp

A. Requirements

Provide Span Wire Clamps that are cast from Aluminum Alloy 713 or equivalent, free of voids, pits, dents, molding sand and excessive foundry grinding marks. Ensure that all design radii are smooth and intact.

Provide an exterior surface finish that is smooth and cosmetically acceptable, free of molding fins, cracks and other exterior blemishes. Ensure that span wire clamps are fabricated from aluminum ingot with minimum requirements as follows:

- ALUMINUM ALLOY No. 713
- YIELD STRENGTH, ksi (MPa) 25 (172)
- TENSILE STRENGTH, ksi (MPa) 35 (240)
- BRINELL HARDNESS 75
- ELONGATING [% in 2 inches (50 mm)] 3

1. Ensure that the Span Wire Clamp can accommodate cables 0.25 inch (6 mm) to 0.63 inch (16 mm) diameter.
2. Ensure that the weight is less than 1.75 pounds (0.8 kg) with hardware.
3. Ensure that the Span Wire Clamp have a minimum overall length of 7 inches (175 mm).
4. Ensure that the Span Wire Clamp have a centerline dimension from cable to clevis pin of 2 inches (50 mm) [+/- 0.5 inches (13 mm)].
5. Ensure that the Span Wire Clamp have a cast aluminum cable bar to protect the cable when tightening the U-bolts.
6. Ensure that the Span Wire Clamp have a mounting opening of 0.75 inches (19 mm) [+/- 0.03 inches (0.8 mm)].
7. Ensure that the Span Wire Clamp have 0.5 inch (13 mm) - 13 NPT U-bolts with 0.5 inch (13 mm) lock washers and nuts.
8. Ensure that the clevis pin are 0.63 inch (16 mm) diameter with a length of 2.25 inches (56 mm) and secured with a hump back stainless steel cotter pin.
9. Ensure that the Clamp and Cable Bar have an Alodine 1200 conversion coating to help resists oxidation.
10. Ensure that the Clevis Pin and hardware are galvanized per ASTM 123/A 123M or stainless steel.

B. Fabrication

General Provisions 101 through 150.

C. Acceptance

General Provisions 101 through 150.

D. Materials Warranty

Refer to Subsection 925.2.01.D for Materials Warranties.

925.2.49 Cast Aluminum Tri-Stud Span Wire Entrance Fitting

A. Requirements

Ensure that the Tri-Stud Span Wire Entrance Fittings are cast from Aluminum Alloy 713 or equivalent, free of voids, pits, dents, molding sand and excessive foundry grinding marks.

Ensure that the all design radii are smooth and intact. Ensure that the exterior surface finish is smooth and cosmetically acceptable, free of molding fin, cracks and other exterior blemishes.

Ensure that the material is fabricated from aluminum ingot with minimum requirements as follows:

- ALUMINUM ALLOY No. 713
- YIELD STRENGTH, ksi (MPa) 25 (172)
- TENSILE STRENGTH, ksi (MPa) 35 (240)
- BRINELL HARDNESS 75
- ELONGATION [% in 2 inches (50 mm)] 3

1. Ensure that the Tri-Stud Span Wire Entrance fitting has a mounting support at the top of the wire entrance 0.69 inches (17 mm) thick [+/- 0.07 inches (1.5 mm)].
2. Ensure that the Tri-Stud Span Wire Entrance fitting weight is not less than 1.75 pounds (0.8 kg) with hardware.
3. Ensure that the mounting support has at least six (6) clevis openings for adjustment with suspension bracing between every two (2) openings.
4. Ensure that the Tri-Stud Span Wire Entrance has a minimum of 0.5 inch (13 mm) diameter throughout for wire access and that wire access is free of burrs and casting webs.
5. Ensure that the Wire Entrance opening is recessed and has a neoprene grommet with sealed membrane sections.
6. Ensure that the signal head attachment end is serrated and has a minimum of 3-signal head centering bosses extending 0.19 inches (5 mm) from the serrations.
7. Ensure that the serrations have a 72-tooth design to match the signal head.
8. Ensure that three (3) stainless steel studs are cast into the wire entrance fitting. Ensure that the studs are 0.31 inches (7 mm) and extend 1.5 inches (38 mm) [+/- 0.13 inches (4 mm)] beyond the serrations. Provide each Tri-Stud span wire entrance fitting with a Tri-Stud hardware kit.
9. Ensure that the Tri-Stud Span Wire Entrance Fitting has an alodine conversion coating to provide a proper base for paint adhesion. Ensure that the assembly is painted federal yellow and baked in a drying oven after painting.
10. Ensure that the all Hardware is galvanized or stainless steel.

B. Fabrication

General Provisions 101 through 150.

C. Acceptance

General Provisions 101 through 150.

D. Materials Warranty

Refer to Subsection 925.2.01.D for Materials Warranties.

925.2.50 Bull Rings

A. Requirements

Provide bull rings that are galvanized weldless steel 0.63 inch (16 mm) diameter. Submit catalog cuts for approval.

B. Fabrication

General Provisions 101 through 150.

C. Acceptance

General Provisions 101 through 150.

D. Materials Warranty

Refer to Subsection 925.2.01.D for Materials Warranties.

925.2.51 Ramp Meter Enforcement Device

A. Requirements

For each metered lane, provide one ramp meter enforcement device mounted on the back of one signal per lane and wired directly to the red signal display, (Refer to 647.3.05.L). This installation shall include a Red 44 LED Array

(allnGaP), Pixel housing, 6061 aluminum powder coated swivel bracket, 2 inch lens, with an aluminum hood. Mounted and adjusted as per the Plans.

B. Fabrication

General Provisions 101 through 150.

C. Acceptance

General Provisions 101 through 150.

D. Materials Warranty

Refer to Subsection 925.2.01.D for Materials Warranties.

925.2.52 Advance Warning Flasher Blank-Out Sign

A. Requirements

The Advance Warning Flasher blank-out sign shall display the message “PREPARE TO STOP” and shall have the dimensions shown in the Plans. The advance warning flasher blank-out sign assembly shall consist of:

- The legend color shall be double stroke red LED Letters
- The LED shall conform to the Federal color Standards.
- The formed letters shall conform to the United States Department of Transportation's Standard Alphabet.
- Two yellow 12 inches (300 mm) traffic signal heads (flashing Beacons) shall be mounted on each end of the sign as shown in the Plans.
- The Yellow Flashing Beacon will be designed using the 925.2.06 Flashing Beacon Assembly, 925.2.15 LED Signal Modules, and 925.2.11 Vehicle Signal Heads requirements. The Yellow Flashing Beacon shall alternate. The flashing beacon cabinet assembly shall be located outside attached to the sign pedestal pole. The surge arrestor in the flashing beacon cabinet assembly shall protect the blank-out sign and the flasher unit/flashing beacons. Provide a non-fused disconnect switch instead of the circuit breaker required in 925.2.06, wired to disconnect all power to the advance warning flasher assembly.
- The sign shall be equipped with a photo-cell for dimming of the sign legend. Dimming shall be as per the manufacturers Specifications.
- The assembly shall be capable of continuous operation over a temperature range of -37 °C (-34 F) to +74 °C (165 F). The advance warning flasher blank-out sign assembly housing shall consist of:
- The entire front face of the sign shall be protected by a sheet of polycarbonate mounted in the cast door frame. Lens material shall be 3 millimeter thick clear polycarbonate with vandal resistant properties.
- The sign shall include a 2.5 millimeter thick aluminum weatherproof housing and door with internal structural frame.
- The interior of the unit shall be painted with a flat black enamel to eliminate internal reflection and two coats of yellow standard color No. 13538 baking enamel for exterior surfaces.
- The signal shall completely blank-out when not energized.

B. Fabrication

General Provisions 101 through 150.

C. Acceptance

General Provisions 101 through 150.

D. Materials Warranty

Refer to Subsection 925.2.01.D for Materials Warranties.

925.2.53 Vinyl Electrical Tape

A. Requirements

Ensure electrical tape used is flame retardant, cold and weather resistant. Provide tape that is rated for 600 volts and for use between 0 F (-18 C) and 176 F (80 C).

Ensure tape is 0.0085inches (0.2 mm) thick and meets the requirements of UL 510 and Mil-I-24391. Provide tape that remains flexible with abrasion resistance.

B. Fabrication

General Provisions 101 through 150.

C. Acceptance

General Provisions 101 through 150.

D. Materials Warranty

Refer to Subsection 925.2.01.D for Materials Warranties.

November 18, 2005
Revised June 5, 2009

DEPARTMENT OF TRANSPORTATION
STATE OF GEORGIA

SPECIAL PROVISION

Section 934—Rapid Setting Patching Materials for Portland Cement Concrete

Delete Section 934 and substitute the following:

934.1 General Description

This section includes the requirements for rapid setting patching materials used in Portland cement concrete.

934.1.01 Related References

A. Standard Specifications

Section 886—Epoxy Resin Adhesives

B. Referenced Documents

AASHTO	ASTM
T 97 T 260	C 31/C31M C 109/C 109M C 140 C 666

Federal Hazardous Products Labeling Act

QPL 27

934.2 Materials

934.2.01 Rapid Setting Patching Materials

A. General Requirements

1. Use rapid setting patching materials that have the following characteristics:
   - Are nonmetallic.
   - Have a color similar to Portland cement concrete.
   - Can be mixed and placed like concrete.
   - Have accelerated hardening characteristics.
   - Yield a permanent patch in concrete that can withstand traffic within 2 hours.

   For a list of sources, see QPL-27.
2. Type I

   Use Type I to patch reinforced or nonreinforced horizontal Portland cement concrete surfaces.
3. Type II

   Use Type II to patch only nonreinforced horizontal Portland cement concrete surfaces.
4. Type III

   Use Type III to patch reinforced vertical or overhead Portland cement concrete surfaces.

5. Classify Type I, Type II, and Type III as follows:
   a. Class A, Premixed: Use these materials as received by adding water or an activator solution, according to the manufacturer's instructions.

NOTE: DO NOT add extra aggregate to Class A patching material without approval from the Office of Materials and Research.

   b. Class B, Non-Premixed: These materials contain no aggregate. Add aggregate (fine and/or coarse) according to the manufacturer's recommendations.
6. Type IV

   Use elastomeric patching material to patch nonreinforced horizontal Portland cement concrete surfaces.
7. Type V

   Use two-component cross linked resins to patch nonreinforced horizontal Portland cement concrete surfaces.
8. Type VI

   Use cementitious, rapid setting, structural repair mortar to patch nonreinforced horizontal Portland cement concrete surfaces.

B. Phyiscal Requirements

1. Use Type I, Type II, and Type III patching materials that have been evaluated by the National Transportation Product Evaluation Program (NTPEP) or other approved test facility, and meet the following requirements.

Requirement	Measurement
Flow of Mortar, Type I and Type II Type III	100% minimum 80% to 100%
Flexural Strength, Minimum	500 psi (3.5 MPa) in 24 hours
Compression Strength, Minimum	
2 hours 24 hours 7 days (moisture cure)	1,200 psi (8.5 MPa) 3,000 psi (20 MPa) 4,000 psi (27.5 MPa)
Absorption, Maximum	10%
Shear Bond, Minimum	200 psi (1.5 MPa) in 24 hours
Freeze Thaw Durability Factor	75% of the reference concrete after 300 freeze-thaw cycles
Total Chlorides	
Type I and Type III Type II	0.6 lb/yd³ (0.4 kg/m³) maximum No limits

C. Fabrication

1. Packaging
   a. Package this material in strong, moisture-proof paper bags or other suitable containers that can withstand shipping, normal handling, and storage without breaking.
   b. Clearly label each container of the components of a patching system with the following information:
      - Component designation, if two components.
      - Manufacturer's batch number.

- Mixing ratio and directions.
- Potential hazards and precautions displayed according to the Federal Hazardous Products Labeling Act.

D. Acceptance

1. Follow the mixing instructions of the manufacturer to create test specimens.
2. Air-cure all test specimens except for the 7-day moisture cure cubes.
3. Test Types I, II, and III using the following methods:

Test	Method
Flow of mortar	ASTM C 230
Flexural strength	AASHTO T 97
Compressive strength	ASTM C 109/C 109M or C 31/C 31M, whichever is applicable
Absorption	ASTM C 140
Shear bond strength	See Subsection 934.2.01.C, "Acceptance", Step 4
Rapid freeze thaw	ASTM C 666
Total chlorides	AASHTO T 260

4. Shear Bond Strength
   a. Place a Type II epoxy resin adhesive meeting the requirements of Section 886 on the surface of a cured mortar bar 16 x 3 x 3 in (400 x 75 x 75 mm).
   b. Cast a 16 x 2 x 0.5 in (400 x 50 x 13 mm) rapid-setting material patch in the center of the mortar base.
   c. Air-cure the test sample for 24 hours.
   d. Saw the mortar bar base and the cured rapid setting material patch into 2 in (50 mm) segments for testing.
   e. Use a holding device and plunger to apply a load at a rate of 0.05 in (1.3 mm) per minute to the patch until the patch fails.
   f. Read the load in pounds (newtons) on the plunger.
   g. Calculate the shear bond strength in pounds per square inch by dividing the load in pounds by the interfacial area of the patch in square inches. Calculate the metric equivalent for shear bond strength in MPa by dividing the load in newtons by gravitational acceleration (9.81 m/s^2).
5. Use Type IV, Type V and Type VI patching materials that have been evaluated by NTPEP, and received a subjective field rating of $\geq$ 4 on an ascending scale from 1 to 5.
6. The Department will reject a patching system that meets all the requirements of this Specification, but does not work as required in actual use.

E. Materials Warranty

Ensure that the material has a minimum storage life of at least 1 year under conditions of 40° to 90° F (4° to 32° C) and maximum relative humidity of 90 percent.

Office of Materials & Research

Georgia DOT Project: CSMSL-0008-00(690) Chatham
GDOT P.I. #0008690

DESIGN-BUILD
MEMORANDUM OF UNDERSTANDING

between the

Georgia Department of Transportation (hereafter the DEPARTMENT)

and

ATLANTA GAS LIGHT CO. (hereafter the OWNER)

Whereas the DEPARTMENT proposes to undertake a design-build project hereafter referred to as PROJECT to extend the Jimmy Deloach Parkway in Chatham, Georgia by contract through competitive bidding procedures; and,

Whereas the DEPARTMENT will accomplish the PROJECT through a Design Consultant, Design Consultant Team and/or Contractor hereafter referred to as CONTRACTOR; and,

Whereas, where OWNER has property rights ("Prior Rights") at the location of the PROJECT, OWNER will provide written evidence as to said prior rights within the area and will provide written documentation of prior rights relating to any individual crossing or Utility Facility, at the location of the PROJECT; and

Whereas, OWNER acknowledges that, generally, absent a showing of prior rights, the costs of relocation, protection, removal, or adjustment performed by OWNER shall be borne by OWNER; and

Whereas, pursuant to O.C.G.A. § 32-6-170(b), DEPARTMENT is authorized to pay or participate in the payment of the costs of relocation, protection, or adjustment of OWNER'S facilities where DEPARTMENT has made the determination that (i) such payments are in the best interest of the public and necessary in order to expedite the staging of the design-build project; and (ii) the costs of the removal, relocation, protection, or adjustment of such facilities are included as part of the Contract between the Department and the Department's roadway contractor for the design-build project; and

1. Type of Utility

OWNER has the following utility facilities which may need to be adjusted or relocated as a result of the proposed PROJECT:

Type of facility or facilities of OWNER:

_____Domestic water mains and distribution lines and associated appurtenances
_____Sanitary Sewer facilities and/or Storm Drainage System
_____Electrical Distribution (overhead and underground) wires, poles, etc.
_____Electrical Transmission (overhead and underground) wires, poles, etc.
__X__Natural Gas Distribution Facilities (underground)
_____Natural Gas Transmission Facilities (underground)
_____Petroleum Pipeline (underground)
_____Telecommunications facilities and equipment
_____Cable TV facilities
_____Street Lighting
_____Internet Data Service
_____Other Facilities (Description) _____

2. New Utility Facilities Proposed (Betterment)

OWNER desires the following to be installed as new additional facilities within the PROJECT. Insert here or attach a detailed description of proposed new additional utility installations:

NA

3. Assignment of Responsibilities for Design and Construction

This MEMORANDUM OF UNDERSTANDING and the following shall serve as a *basis* for assignment of responsibilities and costs for the DEPARTMENT to enter into a Standard Utility Agreement (SUA) or Contract Item Agreement (CIA), if necessary, with OWNER once the PROJECT is awarded to the CONTRACTOR. For a PROJECT implementation, GDOT will not have in its possession exact costing plans to be utilized to determine exact locations of the removal, relocation, protection, or adjustment. However, Overhead/Subsurface Utility Engineering (SUE) investigations plans exist providing the best information and signifying the layout of known existing facilities. Please use these plans for developing the final determination of services as indicated below. The CONTRACTOR developed plans will be provided to the OWNER for after the design build project is awarded by GDOT which shall be used by the CONTRACTOR as the final basis for the SUA or CIA.

OWNER hereby intends to:

A. OWNER, at the DEPARTMENT'S cost, will provide the following services for the properties for which it has established prior rights (check to signify):

Design X
Construction X

B. OWNER, for any removal, relocation, protection, or adjustments that do not have prior rights will allow their facilities to be placed into the DEPARTMENT'S contract for the following services pursuant to O.C.G.A. § 32-6-170(b). The DEPARTMENT will add the removal, relocation, protection, or adjustment costs to the overall PROJECT's cost. The OWNER will be responsible for all design work cost (check to signify):

Construction X

C. OWNER, at OWNER'S cost, will provide the following services (check to signify):

Design ____
Construction ____

The following is hereby mutually agreed to and understood by both parties:

1. The identification of existing facilities including preparation of Overhead/Subsurface Utility Engineering (SUE) investigations plans will be accomplished by the DEPARTMENT prior to award of the PROJECT and thereafter supplemented by the CONTRACTOR.

2. The CONTRACTOR shall coordinate reviews of the utility relocation information and obtain acceptance from the OWNER and DEPARTMENT when required. However; the OWNER shall apply for and obtain any required permits from the DEPARTMENT and perform any final design or proprietary design needed to administer its own relocation work if the work will not be included in the PROJECT (list any work not included in the PROJECT in space provided above). If the preliminary plans indicate that no conflict exists, and the OWNER concurs with this information, the OWNER shall provide a letter of "no conflict" to the CONTRACTOR.

3. The CONTRACTOR will research the property interest of each OWNER and present the findings to the DEPARTMENT and OWNER for approval. The CONTRACTOR will coordinate resolution of any disputed items. The plans and estimate for the utility work shall be subject to approval of both the DEPARTMENT and the OWNER prior to construction. If the OWNER chooses to include the subject utility work in the PROJECT and the research indicates that no property interest exists, the OWNER did not indicate Section 3B above, and the OWNER cannot refute this finding with evidence that would substantiate the property interest in legal proceedings, the OWNER shall provide confirmation in writing that OWNER will reimburse the DEPARTMENT for any adjustment or relocations necessary; and an agreement will be prepared and executed in accordance with the DEPARTMENT'S "Utility Accommodation Policy and Standards Manual". If the OWNER chooses to perform its own relocations and the OWNER holds no property interest as stated above, the OWNER shall confirm in writing that the OWNER will relocate its own facilities at no cost to the DEPARTMENT and the CONTRACTOR.

4. All construction engineering and contract supervision shall be the responsibility of the DEPARTMENT and the CONTRACTOR to ensure that all utility work included in the PROJECT is accomplished in accordance with the PROJECT's plans and specifications. The CONTRACTOR will consult with the OWNER before authorizing any changes or deviations which affect the OWNER's facility.

5. For Utility work included in the PROJECT, the CONTRACTOR shall ensure that the construction and installation of the OWNER'S facilities is performed by a contractor prequalified/registered with both the DEPARTMENT and the OWNER. The CONTRACTOR shall contact the OWNER to obtain the current list of the OWNER's prequalified Contractors.

6. For Utility work included in the PROJECT's contract, the OWNER or the OWNER's Consultant shall have the right to visit and inspect the work at any time and advise the CONTRACTOR and the DEPARTMENT'S Engineer of any observed discrepancies or potential issues. The DEPARTMENT agrees to notify the OWNER when all utility work is completed and ready for final inspection by the OWNER.

7. Upon Maintenance Acceptance or Final Acceptance of the utility work included in the contract and upon certification by the DEPARTMENT'S Engineer and the OWNER, that the work has been completed in accordance with the plans and specifications, the OWNER will accept the adjusted, relocated, and additional facilities and will thereafter operate and maintain said facilities located within the PROJECT right of way subject to the DEPARTMENT'S "Utility Accommodation Policy and Standards Manual, current edition" and any agreements in effect without further cost to the DEPARTMENT or it's CONTRACTOR.

8. For the purpose of utility coordination, relocation and reimbursement matters, the OWNER shall cooperate with the CONTRACTOR in the same manner as if coordinating directly with the DEPARTMENT in accordance with the laws of the State of Georgia, the DEPARTMENT'S "Utility Accommodation Policy and Standards Manual, current edition" and any agreements in effect between the DEPARTMENT and OWNER. The OWNER agrees to cooperate in good faith with the CONTRACTOR and to respond to all requests for information or meetings required to reach a resolution of any disputed items.

The Memorandum of Understanding will be incorporated into the project contract by reference or Exhibit.

APPROVED FOR THE OWNER BY:

(Signature) 2/16/11 (Date)

MGR ENGINEERING DESIGN AGLC + CGC

(Title)

APPROVED FOR THE DEPARTMENT BY:

(Signature) Jeff Baker TLB 4-14-11 (Date)

STATE UTILITIES ENGINEER

2011 Approved Pipeline Contractor List for AGL

Primary Work Location	Secondary Work Locations	First Name	Last Name	Company Name	Work Phone	WorkExtn	Email Name
AGLC	CGC	Pete	Zeis	Benton-Georgia, Inc.	770-942-8180	106	pzeis@benton-georgia.com
AGLC	CGC	Todd	Day	Benton-Georgia, Inc.	770-942-8180	108	tday@benton-georgia.com
AGLC		John	Walker	CEDS Construction	770-889-2361	14	jjwalker_ceds@bellsouth.net
AGLC		Lamar	Andrews	CEDS Construction	770-889-2361	15	LAndrews_CEDS@bellsouth.net
AGLC		Lance	Souther	D Lance Souther, Inc.	478-742-2292		lance@dlsi.us
AGLC		Edmund	Zammit	D Lance Souther, Inc.	478-742-2292		edmund@dlsi.us
AGLC		Bryan	Boyd	Gunter Construction Company, Inc.	770-963-7760	201	bboyd@gunterconst.com
AGLC		Morris	Reese	Gunter Construction Company, Inc.	770-963-7760	205	morris@gunterconst.com
CGC	AGLC	Pam	Newman	Hiwassee Construction Company, Inc	423-336-2271		hiwassee@hughes.net
CGC	AGLC	SD	Newman	Hiwassee Construction Company, Inc	423-336-2271		same as above
CGC	AGLC	Shirley	McCallie	Hunter Utility	423-344-6608		smccallie@huctn.com
AGLC	FCG	Andy	Maynard	InfraSource	(912) 877-0440		andy.maynard@infrasourceinc.com
ALL	CGC/FCG/VNG	Kevin	Adams	InfraSource	404-432-9145		kevin.adams@infrasourceinc.com
AGLC		Dave	Stotz	Latex Construction Company	770-760-0820	233	dave.stotz@latexconstruction.com
AGLC		Dave	Williams	Latex Construction Company	770-760-0820	231	dave.williams@latexconstruction.com
AGLC		Tom	Pridemore	Pride Utility	770-844-8140		tpridemore@prideutility.com
AGLC		Payton	Crawford	Pride Utility	770-844-8140		pcrawford@prideutility.com
AGLC	VNG	Billy	Cambell	Southeast Connections aka SEC	404.659.1422	228	billy@seconnections.com
AGLC	VNG	Josh	Evans	Southeast Connections aka SEC	404.659.1422	227	josh@seconnections.com
AGLC		Tony	Pittman	Southern Pipeline, Inc.	770-589-5184		southernpipeline@aol.com
AGLC		Walter	Thomas	Thomas Utility Contractors	706-737-0042		tuci@bellsouth.net

Georgia DOT Project: CSMSL-008-00(690) Chatham
GDOT P.I. # 0008690

DESIGN-BUILD
MEMORANDUM OF UNDERSTANDING

between the

Georgia Department of Transportation (hereafter the DEPARTMENT)

and

Bellsouth Telecommunications, Inc. d/b/a AT&T Georgia (hereafter the OWNER)

Whereas the DEPARTMENT proposes to undertake a design-build project hereafter referred to as PROJECT to extend the Jimmy Deloach Parkway in Chatham, Georgia by contract through competitive bidding procedures; and,

Whereas the DEPARTMENT will accomplish the PROJECT through a Design Consultant, Design Consultant Team and/or Contractor hereafter referred to as CONTRACTOR; and,

Whereas, where OWNER has property rights ("Prior Rights") at the location of the PROJECT, OWNER will provide written evidence as to said prior rights within the area and will provide written documentation of prior rights relating to any individual crossing or Utility Facility, at the location of the PROJECT; and

Whereas, OWNER acknowledges that, generally, absent a showing of prior rights, the costs of relocation, protection, removal, or adjustment performed by OWNER shall be borne by OWNER; and

Whereas, pursuant to O.C.G.A. § 32-6-170(b), DEPARTMENT is authorized to pay or participate in the payment of the costs of relocation, protection, or adjustment of OWNER'S facilities where DEPARTMENT has made the determination that (i) such payments are in the best interest of the public and necessary in order to expedite the staging of the design-build project; and (ii) the costs of the removal, relocation, protection, or adjustment of such facilities are included as part of the Contract between the Department and the Department's roadway contractor for the design-build project; and

1. Type of Utility

OWNER has the following utility facilities which may need to be adjusted or relocated as a result of the proposed PROJECT:

Type of facility or facilities of OWNER:
_____Domestic water mains and distribution lines and associated appurtenances
_____Sanitary Sewer facilities and/or Storm Drainage System
_____Electrical Distribution (overhead and underground) wires, poles, etc.
_____Electrical Transmission (overhead and underground) wires, poles, etc.
_____Natural Gas Distribution Facilities (underground)
_____Natural Gas Transmission Facilities (underground)
_____Petroleum Pipeline (underground)
___X___Telecommunications facilities and equipment
_____Cable TV facilities
_____Street Lighting
_____Internet Data Service
_____Other Facilities (Description) _____

2. New Utility Facilities Proposed (Betterment)

OWNER desires the following to be installed as new additional facilities within the PROJECT. Insert here or attach a detailed description of proposed new additional utility installations:

_____

_____

3. Assignment of Responsibilities for Design and Construction

This MEMORANDUM OF UNDERSTANDING and the following shall serve as a *basis* for assignment of responsibilities and costs for the DEPARTMENT to enter into a Standard Utility Agreement (SUA) or Contract Item Agreement (CIA), if necessary, with OWNER once the PROJECT is awarded to the CONTRACTOR. For a PROJECT implementation, GDOT will not have in its possession exact costing plans to be utilized to determine exact locations of the removal, relocation, protection, or adjustment. However, Overhead/Subsurface Utility Engineering (SUE) investigations plans exist providing the best information and signifying the layout of known existing facilities. Please use these plans for developing the final determination of services as indicated below. The CONTRACTOR developed plans will be provided to the OWNER after the design build project is awarded by GDOT which shall be used by the CONTRACTOR as the final basis for the SUA or CIA.

OWNER hereby intends to:

A. OWNER, at the DEPARTMENT'S cost, will provide the following services for the properties for which it has established prior rights (check to signify):

Design _____
Construction _____

B. OWNER, for any removal, relocation, protection, or adjustment that do not have prior rights will allow their facilities to be placed into the DEPARTMENT'S contract for the following services pursuant to O.C.G.A. § 32-6-170(b). The DEPARTMENT will add the removal, relocation, protection, or adjustment cost to the overall PROJECT's cost. The OWNER will be responsible for all design work cost (check to signify):

Construction _____

As per this section, all work necessary for the removal, relocation, protection, or adjustment of the described utilities in accordance with the plans when approved shall be included in the project contract and accomplished by the CONTRACTOR except as follows (check none or list any work items to be performed by the OWNER)

None _____

Excluded Items _____

_____

_____

_____

C. OWNER, at OWNER'S cost, will provide the following services (check to signify):

Design __X___
Construction __X___

The following is hereby mutually agreed to and understood by both parties:

1. The identification of existing facilities including preparation of Overhead/Subsurface Utility Engineering (SUE) investigations plans will be accomplished by the DEPARTMENT prior to award of the PROJECT and thereafter supplemented by the CONTRACTOR.

2. The CONTRACTOR shall coordinate reviews of the utility relocation information and obtain acceptance from the OWNER and DEPARTMENT when required. However; the OWNER shall apply for and obtain any required permits from the DEPARTMENT and perform any final design or proprietary design needed to administer its own relocation work if the work will not be included in the PROJECT (list any work <u>not included</u> in the PROJECT in space provided above). If the preliminary plans indicate that no conflict exists, and the OWNER concurs with this information, the OWNER shall provide a letter of "no conflict" to the CONTRACTOR.

3. After award of the project, the CONTRACTOR will research the property interest of each OWNER and present the findings to the DEPARTMENT and OWNER for approval. The CONTRACTOR will coordinate resolution of any disputed items. The plans and estimate for the utility work shall be subject to approval of both the DEPARTMENT and the OWNER prior to construction. If the OWNER chooses to include the subject utility work in the PROJECT and the research indicates that no property interest exists, the OWNER did not indicate Section 3B above, and the OWNER cannot refute this finding with evidence that would substantiate the property interest in legal proceedings, the OWNER shall provide confirmation in writing that OWNER will reimburse the DEPARTMENT for any adjustment or relocations necessary; and an agreement will be prepared and executed in accordance with the DEPARTMENT'S "Utility Accommodation Policy and Standards Manual". If the OWNER chooses to perform its own relocations and the OWNER holds no property interest as stated above, the OWNER shall confirm in writing that the OWNER will relocate its own facilities at no cost to the DEPARTMENT and the CONTRACTOR.

4. All construction engineering and contract supervision shall be the responsibility of the DEPARTMENT and the CONTRACTOR to ensure that all utility work included in the PROJECT is accomplished in accordance with the PROJECT's plans and specifications. The CONTRACTOR will consult with the OWNER before authorizing any changes or deviations which affect the OWNER's facility.

5. For Utility work included in the PROJECT, the CONTRACTOR shall ensure that the construction and installation of the OWNER'S facilities is performed by a contractor prequalified/registered with both the DEPARTMENT and the OWNER. The CONTRACTOR shall contact the OWNER to obtain the current list of the OWNER's prequalified Contractors:

6. For Utility work included in the PROJECT's contract, the OWNER or the OWNER's Consultant shall have the right to visit and inspect the work at any time and advise the CONTRACTOR and the DEPARTMENT'S Engineer of any observed discrepancies or potential issues. The DEPARTMENT agrees to notify the OWNER when all utility work is completed and ready for final inspection by the OWNER.

7. Upon Maintenance Acceptance or Final Acceptance of the utility work included in the contract and upon certification by the DEPARTMENT'S Engineer and the OWNER, that the work has been completed in accordance with the plans and specifications, the OWNER will accept the adjusted, relocated, and additional

facilities and will thereafter operate and maintain said facilities located within the PROJECT right of way subject to the DEPARTMENT'S "Utility Accommodation Policy and Standards Manual, current edition" and any agreements in effect without further cost to the DEPARTMENT or it's CONTRACTOR.

8. For the purpose of utility coordination, relocation and reimbursement matters, the OWNER shall cooperate with the CONTRACTOR in the same manner as if coordinating directly with the DEPARTMENT in accordance with the laws of the State of Georgia, the DEPARTMENT'S "Utility Accommodation Policy and Standards Manual, current edition" and any agreements in effect between the DEPARTMENT and OWNER. The OWNER agrees to cooperate in good faith with the CONTRACTOR and to respond to all requests for information or meetings required to reach a resolution of any disputed items.

The Memorandum of Understanding will be incorporated into the project contract by reference or Exhibit.

APPROVED FOR THE OWNER BY:

(Signature) 7-19-2011 (Date)

MGR OSP PLNG + ENGRG DESIGN

(Title)

APPROVED FOR THE DEPARTMENT BY:

(Signature) 7-25.2011 (Date)

STATE UTILITIES ENGINEER

Georgia DOT Project: CSMSL-0008-00(690) Chatham
GDOT P.I. #0008690

DESIGN-BUILD
MEMORANDUM OF UNDERSTANDING

between the
Georgia Department of Transportation (hereafter the DEPARTMENT)
and
_City of Port Wentworth_____ (hereafter the OWNER)

Whereas the DEPARTMENT proposes to undertake a design-build project hereafter referred to as PROJECT to extend the Jimmy Deloach Parkway in Chatham, Georgia by contract through competitive bidding procedures; and,

Whereas the DEPARTMENT will accomplish the PROJECT through a Design Consultant, Design Consultant Team and/or Contractor hereafter referred to as CONTRACTOR; and,

Whereas, where OWNER has property rights ("Prior Rights") at the location of the PROJECT, OWNER will provide written evidence as to said prior rights within the area and will provide written documentation of prior rights relating to any individual crossing or Utility Facility, at the location of the PROJECT; and

Whereas, OWNER acknowledges that, generally, absent a showing of prior rights, the costs of relocation, protection, removal, or adjustment performed by OWNER shall be borne by OWNER; and

Whereas, pursuant to O.C.G.A. § 32-6-170(b), DEPARTMENT is authorized to pay or participate in the payment of the costs of relocation, protection, or adjustment of OWNER'S facilities where DEPARTMENT has made the determination that (i) such payments are in the best interest of the public and necessary in order to expedite the staging of the design-build project; and (ii) the costs of the removal, relocation, protection, or adjustment of such facilities are included as part of the Contract between the Department and the Department's roadway contractor for the design-build project; and

1. Type of Utility

OWNER has the following utility facilities which may need to be adjusted or relocated as a result of the proposed PROJECT:

Type of facility or facilities of OWNER:
_✓_Domestic water mains and distribution lines and associated appurtenances
_✓_Sanitary Sewer facilities and/or Storm Drainage System
_____Electrical Distribution (overhead and underground) wires, poles, etc.
_____Electrical Transmission (overhead and underground) wires, poles, etc.
_____Natural Gas Distribution Facilities (underground)
_____Natural Gas Transmission Facilities (underground)
_____Petroleum Pipeline (underground)
_____Telecommunications facilities and equipment
_____Cable TV facilities
_____Street Lighting
_____Internet Data Service
_____Other Facilities (Description) _____

2. New Utility Facilities Proposed (Betterment)

OWNER desires the following to be installed as new additional facilities within the PROJECT. Insert here or attach a detailed description of proposed new additional utility installations:

_____

_____

3. Assignment of Responsibilities for Design and Construction

This MEMORANDUM OF UNDERSTANDING and the following shall serve as a *basis* for assignment of responsibilities and costs for the DEPARTMENT to enter into a Standard Utility Agreement (SUA) or Contract Item Agreement (CIA), if necessary, with OWNER once the PROJECT is awarded to the CONTRACTOR. For a PROJECT implementation, GDOT will not have in its possession exact costing plans to be utilized to determine exact locations of the removal, relocation, protection, or adjustment. However, Overhead/Subsurface Utility Engineering (SUE) investigations plans exist providing the best information and signifying the layout of known existing facilities. Please use these plans for developing the final determination of services as indicated below. The CONTRACTOR developed plans will be provided to the OWNER for after the design build project is awarded by GDOT which shall be used by the CONTRACTOR as the final basis for the SUA or CIA.

OWNER hereby intends to:

A. OWNER, at the DEPARTMENT'S cost, will provide the following services for the properties for which it has established prior rights (check to signify):

Design _____
Construction _____

B. OWNER, for any removal, relocation, protection, or adjustments that do not have prior rights will allow their facilities to be placed into the DEPARTMENT'S contract for the following services pursuant to O.C.G.A. § 32-6-170(b). The DEPARTMENT will add the removal, relocation, protection, or adjustment costs to the overall PROJECT's cost. The OWNER will be responsible for all design work cost (check to signify):

Construction ✓

C. OWNER, at OWNER'S cost, will provide the following services (check to signify):

Design _____
Construction _____

The following is hereby mutually agreed to and understood by both parties:

1. The identification of existing facilities including preparation of Overhead/Subsurface Utility Engineering (SUE) investigations plans will be accomplished by the DEPARTMENT prior to award of the PROJECT and thereafter supplemented by the CONTRACTOR.

2. The CONTRACTOR shall coordinate reviews of the utility relocation information and obtain acceptance from the OWNER and DEPARTMENT when required. However; the OWNER shall apply for and obtain any required permits from the DEPARTMENT and perform any final design or proprietary design needed to administer its own relocation work if the work will not be included in the PROJECT (list any work not included in the PROJECT in space provided above). If the preliminary plans indicate that no conflict exists, and the OWNER concurs with this information, the OWNER shall provide a letter of "no conflict" to the CONTRACTOR.

3. The CONTRACTOR will research the property interest of each OWNER and present the findings to the DEPARTMENT and OWNER for approval. The CONTRACTOR will coordinate resolution of any disputed items. The plans and estimate for the utility work shall be subject to approval of both the DEPARTMENT and the OWNER prior to construction. If the OWNER chooses to include the subject utility work in the PROJECT and the research indicates that no property interest exists, the OWNER did not indicate Section 3B above, and the OWNER cannot refute this finding with evidence that would substantiate the property interest in legal proceedings, the OWNER shall provide confirmation in writing that OWNER will reimburse the DEPARTMENT for any adjustment or relocations necessary; and an agreement will be prepared and executed in accordance with the DEPARTMENT'S "Utility Accommodation Policy and Standards Manual". If the OWNER chooses to perform its own relocations and the OWNER holds no property interest as stated above, the OWNER shall confirm in writing that the OWNER will relocate its own facilities at no cost to the DEPARTMENT and the CONTRACTOR.

4. All construction engineering and contract supervision shall be the responsibility of the DEPARTMENT and the CONTRACTOR to ensure that all utility work included in the PROJECT is accomplished in accordance with the PROJECT's plans and specifications. The CONTRACTOR will consult with the OWNER before authorizing any changes or deviations which affect the OWNER's facility.

5. For Utility work included in the PROJECT, the CONTRACTOR shall ensure that the construction and installation of the OWNER'S facilities is performed by a contractor prequalified/registered with both the DEPARTMENT and the OWNER. The CONTRACTOR shall contact the OWNER to obtain the current list of the OWNER's prequalified Contractors.

6. For Utility work included in the PROJECT's contract, the OWNER or the OWNER's Consultant shall have the right to visit and inspect the work at any time and advise the CONTRACTOR and the DEPARTMENT'S Engineer of any observed discrepancies or potential issues. The DEPARTMENT agrees to notify the OWNER when all utility work is completed and ready for final inspection by the OWNER.

7. Upon Maintenance Acceptance or Final Acceptance of the utility work included in the contract and upon certification by the DEPARTMENT'S Engineer and the OWNER, that the work has been completed in accordance with the plans and specifications, the OWNER will accept the adjusted, relocated, and additional facilities and will thereafter operate and maintain said facilities located within the PROJECT right of way subject to the DEPARTMENT'S "Utility Accommodation Policy and Standards Manual, current edition" and any agreements in effect without further cost to the DEPARTMENT or it's CONTRACTOR.

8. For the purpose of utility coordination, relocation and reimbursement matters, the OWNER shall cooperate with the CONTRACTOR in the same manner as if coordinating directly with the DEPARTMENT in accordance with the laws of the State of Georgia, the DEPARTMENT'S "Utility Accommodation Policy and Standards Manual, current edition" and any agreements in effect between the DEPARTMENT and OWNER. The OWNER agrees to cooperate in good faith with the CONTRACTOR and to respond to all requests for information or meetings required to reach a resolution of any disputed items.

The Memorandum of Understanding will be incorporated into the project contract by reference or Exhibit.

APPROVED FOR THE OWNER BY:

G. [illegible] 2.24.11

(Signature) (Date)

Mayor

(Title)

APPROVED FOR THE DEPARTMENT BY:

Jeff Baker TLB 4-14-11

(Signature) (Date)

STATE UTILITIES ENGINEER

CITY OF
Savannah
WATER RESOURCES BUREAU
Planning & Engineering

March 1, 2011

Stephen Thomas
GDOT Assistant District Utility Engineer
204 North Highway 301
Jesup, Georgia 31546

RE: Design-Build Memorandum of Understanding for Jimmy Deloach Parkway Extension (P.I.N. – 0006043)

Dear Mr. Thomas:

Please find enclosed a signed copy of the Design-Build Memorandum of Understanding (MOU). Per our discussions it is Savannah's understanding that Savannah is to secure the design services for the relocation of a section of our 48-inch diameter water main that the new roadway will cross transversely. Said design costs will be paid for by GDOT. Upon completion of the design, the final waterline relocation plans will be provided to GDOT for incorporation into the GDOT's design/build roadway construction contract. All construction costs will be borne by GDOT.

It is also Savannah's understanding that this MOU is solely for the purpose of establishing the coordination and working relationship between the various parties. It is also Savannah's understanding that under no circumstances or in any manner does this MOU constitute a legal or binding agreement between the City of Savannah and any other party.

We look forward to working with GDOT and if we can be of any assistance please contact Mr. Abe Ghazi at 912.651.6573.

Respectfully,

John L. Sawyer

John L. Sawyer, P.E.
Water and Sewer Director

cc: Ebrahim Ghazi

P.O. BOX 1027, SAVANNAH, GA 31402
PHONE 912.651.6573 TDD 912.651.6702 FAX 912.650.7839 SAVANNAHGA.GOV

Georgia DOT Project: CSMSL-0008-00(690) Chatham
GDOT P.I. #0008690

DESIGN-BUILD
MEMORANDUM OF UNDERSTANDING

between the
Georgia Department of Transportation (hereafter the DEPARTMENT)
and
City of Savannah (hereafter the OWNER)

Whereas the DEPARTMENT proposes to undertake a design-build project hereafter referred to as PROJECT to extend the Jimmy Deloach Parkway in Chatham, Georgia by contract through competitive bidding procedures; and,

Whereas the DEPARTMENT will accomplish the PROJECT through a Design Consultant, Design Consultant Team and/or Contractor hereafter referred to as CONTRACTOR; and,

Whereas, where OWNER has property rights ("Prior Rights") at the location of the PROJECT, OWNER will provide written evidence as to said prior rights within the area and will provide written documentation of prior rights relating to any individual crossing or Utility Facility, at the location of the PROJECT; and

Whereas, OWNER acknowledges that, generally, absent a showing of prior rights, the costs of relocation, protection, removal, or adjustment performed by OWNER shall be borne by OWNER; and

Whereas, pursuant to O.C.G.A. § 32-6-170(b), DEPARTMENT is authorized to pay or participate in the payment of the costs of relocation, protection, or adjustment of OWNER'S facilities where DEPARTMENT has made the determination that (i) such payments are in the best interest of the public and necessary in order to expedite the staging of the design-build project; and (ii) the costs of the removal, relocation, protection, or adjustment of such facilities are included as part of the Contract between the Department and the Department's roadway contractor for the design-build project; and

1. Type of Utility

OWNER has the following utility facilities which may need to be adjusted or relocated as a result of the proposed PROJECT:

Type of facility or facilities of OWNER:

X Domestic water mains and distribution lines and associated appurtenances
_____ Sanitary Sewer facilities and/or Storm Drainage System
_____ Electrical Distribution (overhead and underground) wires, poles, etc.
_____ Electrical Transmission (overhead and underground) wires, poles, etc.
_____ Natural Gas Distribution Facilities (underground)
_____ Natural Gas Transmission Facilities (underground)
_____ Petroleum Pipeline (underground)
_____ Telecommunications facilities and equipment
_____ Cable TV facilities
_____ Street Lighting
_____ Internet Data Service
_____ Other Facilities (Description) _____

2. New Utility Facilities Proposed (Betterment)

OWNER desires the following to be installed as new additional facilities within the PROJECT. Insert here or attach a detailed description of proposed new additional utility installations:

_____

_____

3. Assignment of Responsibilities for Design and Construction

This MEMORANDUM OF UNDERSTANDING and the following shall serve as a *basis* for assignment of responsibilities and costs for the DEPARTMENT to enter into a Standard Utility Agreement (SUA) or Contract Item Agreement (CIA), if necessary, with OWNER once the PROJECT is awarded to the CONTRACTOR. For a PROJECT implementation, GDOT will not have in its possession exact costing plans to be utilized to determine exact locations of the removal, relocation, protection, or adjustment. However, Overhead/Subsurface Utility Engineering (SUE) investigations plans exist providing the best information and signifying the layout of known existing facilities. Please use these plans for developing the final determination of services as indicated below. The CONTRACTOR developed plans will be provided to the OWNER for after the design build project is awarded by GDOT which shall be used by the CONTRACTOR as the final basis for the SUA or CIA.

OWNER hereby intends to:

A. OWNER, at the DEPARTMENT'S cost, will provide the following services for the properties for which it has established prior rights (check to signify):

Design __x___ (By Owner at the Department's cost)
Construction _____

B. OWNER, for any removal, relocation, protection, or adjustments will allow their facilities to be placed into the DEPARTMENT'S contract for the following services pursuant to O.C.G.A. § 32-6-170(b). The DEPARTMENT will add the removal, relocation, protection, or adjustment costs to the overall PROJECT's cost. The OWNER will not be responsible for all design work cost as marked in item A(check to signify):

Construction __x___ (By Department at the Department's cost)

C. OWNER, at OWNER'S cost, will provide the following services (check to signify):

Design _____
Construction _____

The following is hereby mutually agreed to and understood by both parties:

1. The identification of existing facilities including preparation of Overhead/Subsurface Utility Engineering (SUE) investigations plans will be accomplished by the DEPARTMENT prior to award of the PROJECT and thereafter supplemented by the CONTRACTOR.

2. The CONTRACTOR shall coordinate reviews of the utility relocation information and obtain acceptance from the OWNER and DEPARTMENT when required. However; the OWNER shall apply for and obtain any required permits from the DEPARTMENT and perform any final design or proprietary design needed to administer its own relocation work if the work will not be included in the PROJECT (list any work not included in the PROJECT in space provided above). If the preliminary plans indicate that no conflict exists, and the OWNER concurs with this information, the OWNER shall provide a letter of "no conflict" to the CONTRACTOR.

3. The CONTRACTOR will research the property interest of each OWNER and present the findings to the DEPARTMENT and OWNER for approval. The CONTRACTOR will coordinate resolution of any disputed items. The plans and estimate for the utility work shall be subject to approval of both the DEPARTMENT and the OWNER prior to construction. If the OWNER chooses to include the subject utility work in the PROJECT and the research indicates that no property interest exists, the OWNER did not indicate Section 3B above, and the OWNER cannot refute this finding with evidence that would substantiate the property interest in legal proceedings, the OWNER shall provide confirmation in writing that OWNER will reimburse the DEPARTMENT for any adjustment or relocations necessary; and an agreement will be prepared and executed in accordance with the DEPARTMENT'S "Utility Accommodation Policy and Standards Manual". If the OWNER chooses to perform its own relocations and the OWNER holds no property interest as stated above, the OWNER shall confirm in writing that the OWNER will relocate its own facilities at no cost to the DEPARTMENT and the CONTRACTOR.

4. All construction engineering and contract supervision shall be the responsibility of the DEPARTMENT and the CONTRACTOR to ensure that all utility work included in the PROJECT is accomplished in accordance with the PROJECT's plans and specifications. The CONTRACTOR will consult with the OWNER before authorizing any changes or deviations which affect the OWNER's facility.

5. For Utility work included in the PROJECT, the CONTRACTOR shall ensure that the construction and installation of the OWNER'S facilities is performed by a contractor prequalified/registered with both the DEPARTMENT and the OWNER. The CONTRACTOR shall contact the OWNER to obtain the current list of the OWNER's prequalified Contractors.

6. For Utility work included in the PROJECT's contract, the OWNER or the OWNER's Consultant shall have the right to visit and inspect the work at any time and advise the CONTRACTOR and the DEPARTMENT'S Engineer of any observed discrepancies or potential issues. The DEPARTMENT agrees to notify the OWNER when all utility work is completed and ready for final inspection by the OWNER.

7. Upon Maintenance Acceptance or Final Acceptance of the utility work included in the contract and upon certification by the DEPARTMENT'S Engineer and the OWNER, that the work has been completed in accordance with the plans and specifications, the OWNER will accept the adjusted, relocated, and additional facilities and will thereafter operate and maintain said facilities located within the PROJECT right of way subject to the DEPARTMENT'S "Utility Accommodation Policy and Standards Manual, current edition" and any agreements in effect without further cost to the DEPARTMENT or it's CONTRACTOR.

8. For the purpose of utility coordination, relocation and reimbursement matters, the OWNER shall cooperate with the CONTRACTOR in the same manner as if coordinating directly with the DEPARTMENT in accordance with the laws of the State of Georgia, the DEPARTMENT'S "Utility Accommodation Policy and Standards Manual, current edition" and any agreements in effect between the DEPARTMENT and OWNER. The OWNER agrees to cooperate in good faith with the CONTRACTOR and to respond to all requests for information or meetings required to reach a resolution of any disputed items.

The Memorandum of Understanding will be incorporated into the project contract by reference or Exhibit.

APPROVED FOR THE OWNER BY:

John Sawyer
(Signature)

(Date)

Water & Sewer Director
(Title)

APPROVED FOR THE DEPARTMENT BY:

Jeff Baker TLB
(Signature)

4-15-11
(Date)

STATE UTILITIES ENGINEER

Hannon, David

From: Hoenig, Andrew
Sent: Friday, June 17, 2011 3:51 PM
To: Hannon, David; 'Robert Lewis'; Dover, Mike
Cc: Brigman, Terry
Subject: FW: Jimmy De Loach Parkway Project- City of Savannah Approved Contractors and 48" Watermain restrictions

FYI

- C. Andrew Hoenig, P.E.
Utilities Preconstruction Engineer
GDOT, Office of Utilities
P: (404)-631-1365
M:(404)-326-6541

From: Cesar Laureano [mailto:CLaureano@Savannahga.Gov]
Sent: Friday, June 17, 2011 3:50 PM
To: Brigman, Terry
Cc: Hoenig, Andrew; Abe Ghazi
Subject: Jimmy De Loach Parkway Project- City of Savannah Approved Contractors and 48" Watermain restrictions

Terry,

Attached is the City of Savannah approved contractors and 48” relocation restrictions for your use.

City approved contractors:

1. Southern Champion Construction, 133 Airport Park Drive Savannah, GA 31408-9544 (912) 964-8700
2. BRW Construction, 1425 Dean Forest Road Savannah, GA 31405-9310 (912) 236-8107
3. Reynolds, Inc., 300 E Broad St Fairburn, GA 30213-1541(770) 969-4040
4. Terry Lee Contracting, 9688 Speedway Blvd Hardeeville, SC 29927, (843) 784-5288

48” Watermain restrictions:

1. The existing 48” watermain shall remain in service at all times throughout the construction phase
2. The Contractor shall coordinate the installation of proposed 48” watermain with the City of Savannah Water supply and Distribution Department during the construction.
3. Design-Build Contractor shall provide additional easement to maintain the relocated portion of the line and to pull the pipe for replacement purposes.

Please don’t hesitate to call on any question you may have.

Cesar Laureano, PE
Water and Sewer Sr. Civil Engineer
City of Savannah
Phone: 912-651-6573
Fax: 912-650-7839

Georgia DOT Project: **********
GDOT P.I. *******

DESIGN-BUILD
MEMORANDUM OF UNDERSTANDING

between the

Georgia Department of Transportation (hereafter the DEPARTMENT)

and

COMCAST CABLE (hereafter the OWNER)

Whereas the DEPARTMENT proposes to undertake a design-build project, P.I. No. 762380 - SR 400/I-85 Connector Ramps, hereafter referred to as PROJECT, by contract through competitive bidding procedures; and,

Whereas the DEPARTMENT will accomplish the PROJECT through a Design Consultant, Design Consultant Team and/or Contractor hereafter referred to as CONTRACTOR; and,

Whereas, where OWNER has property rights ("Prior Rights") at the location of the PROJECT, OWNER will provide written evidence as to said prior rights within the area and will provide written documentation of prior rights relating to any individual crossing or Utility Facility, at the location of the PROJECT; and

Whereas, OWNER acknowledges that, generally, absent a showing of prior rights, the costs of relocation, protection, removal, or adjustment performed by OWNER shall be borne by OWNER; and

Whereas, pursuant to O.C.G.A. § 32-6-170(b), DEPARTMENT is authorized to pay or participate in the payment of the costs of relocation, protection, or adjustment of OWNER'S facilities where DEPARTMENT has made the determination that (i) such payments are in the best interest of the public and necessary in order to expedite the staging of the design-build project; and (ii) the costs of the removal, relocation, protection, or adjustment of such facilities are included as part of the Contract between the Department and the Department's roadway contractor for the design-build project; and

1. Type of Utility

OWNER has the following utility facilities which may need to be adjusted or relocated as a result of the proposed PROJECT:

Type of facility or facilities of OWNER:

_____ Domestic water mains and distribution lines and associated appurtenances
_____ Sanitary Sewer facilities and/or Storm Drainage System
_____ Electrical Distribution (overhead and underground) wires, poles, etc.
_____ Electrical Transmission (overhead and underground) wires, poles, etc.
_____ Natural Gas Distribution Facilities (underground)
_____ Natural Gas Transmission Facilities (underground)
_____ Petroleum Pipeline (underground)
_____ Telecommunications facilities and equipment
_X_ Cable TV facilities
_____ Street Lighting
_____ Internet Data Service
_____ Other Facilities (Description) _____

2. New Utility Facilities Proposed (Betterment)

OWNER desires the following to be installed as new additional facilities within the PROJECT. Insert here or attach a detailed description of proposed new additional utility installations:

_____

_____

3. Assignment of Responsibilities for Design and Construction

This MEMORANDUM OF UNDERSTANDING and the following shall serve as a *basis* for assignment of responsibilities and costs for the DEPARTMENT to enter into a Standard Utility Agreement (SUA) or Contract Item Agreement (CIA), if necessary, with OWNER once the PROJECT is awarded to the CONTRACTOR. For a PROJECT implementation, GDOT will not have in its possession exact costing plans to be utilized to determine exact locations of the removal, relocation, protection, or adjustment. However, Overhead/Subsurface Utility Engineering (SUE) investigations plans exist providing the best information and signifying the layout of known existing facilities. Please use these plans for developing the final determination of services as indicated below. The CONTRACTOR developed plans will be provided to the OWNER for after the design build project is awarded by GDOT which shall be used by the CONTRACTOR as the final basis for the SUA or CIA.

OWNER hereby intends to:

A. OWNER, at the DEPARTMENT'S cost, will provide the following services for the properties for which it has established prior rights (check to signify):

Design _____
Construction _____

B. OWNER, for any removal, relocation, protection, or adjustments that do not have prior rights will allow their facilities to be placed into the DEPARTMENT'S contract for the following services pursuant to O.C.G.A. § 32-6-170(b). The DEPARTMENT will add the removal, relocation, protection, or adjustment costs to the overall PROJECT's cost. The OWNER will be responsible for all design work cost (check to signify):

Construction _____

C. OWNER, at OWNER'S cost, will provide the following services (check to signify):

Design X
Construction X

The following is hereby mutually agreed to and understood by both parties:

1. The identification of existing facilities including preparation of Overhead/Subsurface Utility Engineering (SUE) investigations plans will be accomplished by the DEPARTMENT prior to award of the PROJECT and thereafter supplemented by the CONTRACTOR.

2. The CONTRACTOR shall coordinate reviews of the utility relocation information and obtain acceptance from the OWNER and DEPARTMENT when required. However; the OWNER shall apply for and obtain any required permits from the DEPARTMENT and perform any final design or proprietary design needed to administer its own relocation work if the work will not be included in the PROJECT (list any work not included in the PROJECT in space provided above). If the preliminary plans indicate that no conflict exists, and the OWNER concurs with this information, the OWNER shall provide a letter of "no conflict" to the CONTRACTOR.

3. The CONTRACTOR will research the property interest of each OWNER and present the findings to the DEPARTMENT and OWNER for approval. The CONTRACTOR will coordinate resolution of any disputed items. The plans and estimate for the utility work shall be subject to approval of both the DEPARTMENT and the OWNER prior to construction. If the OWNER chooses to include the subject utility work in the PROJECT and the research indicates that no property interest exists, the OWNER did not indicate Section 3B above, and the OWNER cannot refute this finding with evidence that would substantiate the property interest in legal proceedings, the OWNER shall provide confirmation in writing that OWNER will reimburse the DEPARTMENT for any adjustment or relocations necessary; and an agreement will be prepared and executed in accordance with the DEPARTMENT'S "Utility Accommodation Policy and Standards Manual". If the OWNER chooses to perform its own relocations and the OWNER holds no property interest as stated above, the OWNER shall confirm in writing that the OWNER will relocate its own facilities at no cost to the DEPARTMENT and the CONTRACTOR.

4. All construction engineering and contract supervision shall be the responsibility of the DEPARTMENT and the CONTRACTOR to ensure that all utility work included in the PROJECT is accomplished in accordance with the PROJECT's plans and specifications. The CONTRACTOR will consult with the OWNER before authorizing any changes or deviations which affect the OWNER's facility.

5. For Utility work included in the PROJECT, the CONTRACTOR shall ensure that the construction and installation of the OWNER'S facilities is performed by a contractor prequalified/registered with both the DEPARTMENT and the OWNER. The CONTRACTOR shall contact the OWNER to obtain the current list of the OWNER's prequalified Contractors.

6. For Utility work included in the PROJECT's contract, the OWNER or the OWNER's Consultant shall have the right to visit and inspect the work at any time and advise the CONTRACTOR and the DEPARTMENT'S Engineer of any observed discrepancies or potential issues. The DEPARTMENT agrees to notify the OWNER when all utility work is completed and ready for final inspection by the OWNER.

7. Upon Maintenance Acceptance or Final Acceptance of the utility work included in the contract and upon certification by the DEPARTMENT'S Engineer and the OWNER, that the work has been completed in accordance with the plans and specifications, the OWNER will accept the adjusted, relocated, and additional facilities and will thereafter operate and maintain said facilities located within the PROJECT right of way subject to the DEPARTMENT'S "Utility Accommodation Policy and Standards Manual, current edition" and any agreements in effect without further cost to the DEPARTMENT or it's CONTRACTOR.

8. For the purpose of utility coordination, relocation and reimbursement matters, the OWNER shall cooperate with the CONTRACTOR in the same manner as if coordinating directly with the DEPARTMENT in accordance with the laws of the State of Georgia, the DEPARTMENT'S "Utility Accommodation Policy and Standards Manual, current edition" and any agreements in effect between the DEPARTMENT and OWNER. The OWNER agrees to cooperate in good faith with the CONTRACTOR and to respond to all requests for information or meetings required to reach a resolution of any disputed items.

The Memorandum of Understanding will be incorporated into the project contract by reference or Exhibit.

APPROVED FOR THE OWNER BY:

Donnie Little
(Signature)

04/27/2011
(Date)

Construction Prof.
(Title)

APPROVED FOR THE DEPARTMENT BY:

Jeff Baker TLB
(Signature)

5-3-11
(Date)

STATE UTILITIES ENGINEER

Georgia DOT Project: CSMSL-0008-00(690) Chatham
GDOT P.I. #0008690

DESIGN-BUILD
MEMORANDUM OF UNDERSTANDING

between the
Georgia Department of Transportation (hereafter the DEPARTMENT)
and
Georgia Power Company (hereafter the OWNER)

Whereas the DEPARTMENT proposes to undertake a design-build project hereafter referred to as PROJECT to extend the Jimmy Deloach Parkway in Chatham, Georgia by contract through competitive bidding procedures; and,

Whereas the DEPARTMENT will accomplish the PROJECT through a Design Consultant, Design Consultant Team and/or Contractor hereafter referred to as CONTRACTOR; and,

Whereas, where OWNER has property rights ("Prior Rights") at the location of the PROJECT, OWNER will provide written evidence as to said prior rights within the area and will provide written documentation of prior rights relating to any individual crossing or Utility Facility, at the location of the PROJECT; and

Whereas, OWNER acknowledges that, generally, absent a showing of prior rights, the costs of relocation, protection, removal, or adjustment performed by OWNER shall be borne by OWNER; and

Whereas, pursuant to O.C.G.A. § 32-6-170(b), DEPARTMENT is authorized to pay or participate in the payment of the costs of relocation, protection, or adjustment of OWNER'S facilities where DEPARTMENT has made the determination that (i) such payments are in the best interest of the public and necessary in order to expedite the staging of the design-build project; and (ii) the costs of the removal, relocation, protection, or adjustment of such facilities are included as part of the Contract between the Department and the Department's roadway contractor for the design-build project; and

1. Type of Utility

OWNER has the following utility facilities which may need to be adjusted or relocated as a result of the proposed PROJECT:

Type of facility or facilities of OWNER:
_____Domestic water mains and distribution lines and associated appurtenances
_____Sanitary Sewer facilities and/or Storm Drainage System
__x___Electrical Distribution (overhead and underground) wires, poles, etc.
_____Electrical Transmission (overhead and underground) wires, poles, etc.
_____Natural Gas Distribution Facilities (underground)
_____Natural Gas Transmission Facilities (underground)
_____Petroleum Pipeline (underground)
_____Telecommunications facilities and equipment
_____Cable TV facilities
_____Street Lighting
_____Internet Data Service
_____Other Facilities (Description) _____

2. New Utility Facilities Proposed (Betterment)

OWNER desires the following to be installed as new additional facilities within the PROJECT. Insert here or attach a detailed description of proposed new additional utility installations:

_____

_____

3. Assignment of Responsibilities for Design and Construction

This MEMORANDUM OF UNDERSTANDING and the following shall serve as a *basis* for assignment of responsibilities and costs for the DEPARTMENT to enter into a Standard Utility Agreement (SUA) or Contract Item Agreement (CIA), if necessary, with OWNER once the PROJECT is awarded to the CONTRACTOR. For a PROJECT implementation, GDOT will not have in its possession exact costing plans to be utilized to determine exact locations of the removal, relocation, protection, or adjustment. However, Overhead/Subsurface Utility Engineering (SUE) investigations plans exist providing the best information and signifying the layout of known existing facilities. Please use these plans for developing the final determination of services as indicated below. The CONTRACTOR developed plans will be provided to the OWNER for after the design build project is awarded by GDOT which shall be used by the CONTRACTOR as the final basis for the SUA or CIA.

OWNER hereby intends to:

A. OWNER, at the DEPARTMENT'S cost, will provide the following services for the properties for which it has established prior rights (check to signify):

Design __x__
Construction _____

B. OWNER, for any removal, relocation, protection, or adjustments that do not have prior rights will allow their facilities to be placed into the DEPARTMENT'S contract for the following services pursuant to O.C.G.A. § 32-6-170(b). The DEPARTMENT will add the removal, relocation, protection, or adjustment costs to the overall PROJECT's cost. The OWNER will be responsible for all design work cost (check to signify):

Construction __x__

C. OWNER, at OWNER'S cost, will provide the following services (check to signify):

Design _____
Construction _____

The following is hereby mutually agreed to and understood by both parties:

1. The identification of existing facilities including preparation of Overhead/Subsurface Utility Engineering (SUE) investigations plans will be accomplished by the DEPARTMENT prior to award of the PROJECT and thereafter supplemented by the CONTRACTOR.

2. The CONTRACTOR shall coordinate reviews of the utility relocation information and obtain acceptance from the OWNER and DEPARTMENT when required. However; the OWNER shall apply for and obtain any required permits from the DEPARTMENT and perform any final design or proprietary design needed to administer its own relocation work if the work will not be included in the PROJECT (list any work not included in the PROJECT in space provided above). If the preliminary plans indicate that no conflict exists, and the OWNER concurs with this information, the OWNER shall provide a letter of "no conflict" to the CONTRACTOR.

3. The CONTRACTOR will research the property interest of each OWNER and present the findings to the DEPARTMENT and OWNER for approval. The CONTRACTOR will coordinate resolution of any disputed items. The plans and estimate for the utility work shall be subject to approval of both the DEPARTMENT and the OWNER prior to construction. If the OWNER chooses to include the subject utility work in the PROJECT and the research indicates that no property interest exists, the OWNER did not indicate Section 3B above, and the OWNER cannot refute this finding with evidence that would substantiate the property interest in legal proceedings, the OWNER shall provide confirmation in writing that OWNER will reimburse the DEPARTMENT for any adjustment or relocations necessary; and an agreement will be prepared and executed in accordance with the DEPARTMENT'S "Utility Accommodation Policy and Standards Manual". If the OWNER chooses to perform its own relocations and the OWNER holds no property interest as stated above, the OWNER shall confirm in writing that the OWNER will relocate its own facilities at no cost to the DEPARTMENT and the CONTRACTOR.

4. All construction engineering and contract supervision shall be the responsibility of the DEPARTMENT and the CONTRACTOR to ensure that all utility work included in the PROJECT is accomplished in accordance with the PROJECT's plans and specifications. The CONTRACTOR will consult with the OWNER before authorizing any changes or deviations which affect the OWNER's facility.

5. For Utility work included in the PROJECT, the CONTRACTOR shall ensure that the construction and installation of the OWNER'S facilities is performed by a contractor prequalified/registered with both the DEPARTMENT and the OWNER. The CONTRACTOR shall contact the OWNER to obtain the current list of the OWNER's prequalified Contractors.

6. For Utility work included in the PROJECT's contract, the OWNER or the OWNER's Consultant shall have the right to visit and inspect the work at any time and advise the CONTRACTOR and the DEPARTMENT'S Engineer of any observed discrepancies or potential issues. The DEPARTMENT agrees to notify the OWNER when all utility work is completed and ready for final inspection by the OWNER.

7. Upon Maintenance Acceptance or Final Acceptance of the utility work included in the contract and upon certification by the DEPARTMENT'S Engineer and the OWNER, that the work has been completed in accordance with the plans and specifications, the OWNER will accept the adjusted, relocated, and additional facilities and will thereafter operate and maintain said facilities located within the PROJECT right of way subject to the DEPARTMENT'S "Utility Accommodation Policy and Standards Manual, current edition" and any agreements in effect without further cost to the DEPARTMENT or it's CONTRACTOR.

8. For the purpose of utility coordination, relocation and reimbursement matters, the OWNER shall cooperate with the CONTRACTOR in the same manner as if coordinating directly with the DEPARTMENT in accordance with the laws of the State of Georgia, the DEPARTMENT'S "Utility Accommodation Policy and Standards Manual, current edition" and any agreements in effect between the DEPARTMENT and OWNER. The OWNER agrees to cooperate in good faith with the CONTRACTOR and to respond to all requests for information or meetings required to reach a resolution of any disputed items.

The Memorandum of Understanding will be incorporated into the project contract by reference or Exhibit.

APPROVED FOR THE OWNER BY:

Mark Tilden — 2-8-11

(Signature) (Date)

PROJECT MANAGER - DOT / JOINT USE

(Title)

APPROVED FOR THE DEPARTMENT BY:

Jeff Baker TLB — 4-14-11

(Signature) (Date)

STATE UTILITIES ENGINEER

CONTRACTOR	Business Unit
AAA Cooper Transportation	Transmission
Accura Engineering	Transmission
Acer Environmental	Transmission
Advanced Contractors	Transmission
Advanced Rentals	Transmission
AEC, Inc	Land
Aerotek	Transmission
Aerotek Energy Services	Land
Andrews Excavation	Transmission
Appalachian Surveying Co., Inc.	Land
Asplundh Tree Expert Company	Forestry
Apogee Engineers	Transmission
ASSOCIATED DIVERSIFIED SERVICES	Distribution, Transmission
Atlas Sales and Leasing	Transmission
Aubrey Silvey Enterprises, Inc	Transmission
Augusta Crane & Rigging	Transmission
AWP, Inc.	Distribution
Azalea Fence Company	Transmission
B&G Equipment Rental	Transmission
Barrett Utilities and Construction Co.	Distribution
Basic Discoveries	Land
Bay-Dean, LLC	Transmission
Black & Veatch	Transmission
Boots Sears Company, Inc.	Transmission
BridgeWater & Associates, Inc.	Land
Brysan Utility Contractors	Transmission
Burford's Tree Surgeons, Inc.	Forestry,Transmission
Burns & McDonnel	Transmission
CA Murren and Sons of Georgia	Transmission
Cable East, Inc.	Distribution
Caffrey Construction	Transmission
Can Fer Construction	Transmission
Cartersville Fence Co.	Transmission
CCU Southeastern Utilities of Georgia	Distribution
CDI Corporation	Distribution
Central Fence Co.	Transmission
Chain Electric Company	Distribution, Transmission
Cindy's Trucking	Transmission
Clance Construction	Forestry
Clean Water Consultants	Transmission
Client Services, Inc.	Land
Colston Contracting	Forestry
Commonwealth & Associates	Transmission
Corbett Electrical Construction, Inc.	Distribution
CURRAHEE UTILITY CONTRACTORS, INC	Distribution
DELTA EQUIPMENT ENTERPRISES, INC	Distribution
Design Master Services, Inc.	Land
Development Planning & Engineering, Inc	Land
DILLARD SMITH CONSTRUCTION CO.	Distribution, Transmission
Dinsmore Grading	Transmission
Direct Connect	Transmission, Distribution

CONTRACTOR	Business Unit
DMS Services, Inc.	Transmission
Dogwood Lawn Care	Forestry
Donaldson, Garrett & Associates, Inc.	Land
Ecological Solutions Inc.	Environmental Affairs
ECS Southeast	Transmission
Electrical Control Service, Inc.	Transmission
Electricon, Inc.	Transmission
Ellis Astin Grading Company	Transmission
ELMO CARTER CONSTRUCTION CO. Inc.	Transmission, Distribution
EMC Engineering Services, Inc.	Land
Enercom fka Beckett & Larue	Transmission
ENGlobal Land Inc.	Land
Ensminger's Crane Service	Transmission
Evergreen Tree & Turf Care Inc.	Forestry
Expert Site Services	Transmission
FARLEY TECHNOLOGIES, INC	Distribution
Farley Technologies, Inc.	Distribution
Fred Wilson & Associates, Inc.	Transmission
G&M Contractors	Forestry
Gene Blackburn Engineering	Transmission
Georgia Erosion Control Center	Transmission
Georgia Tech Research Corporation	Forestry
Georgia Utility Services, Inc.	Forestry
GeoSurvey, Ltd.	Land
Global Rental Company	Transmission, Fleet
Graves Construction	Transmission
Graves Construction Services, Inc.	Transmission
Great British Gardner	Forestry
Greenhorne & O'Mara Inc.	Land
Guy M. Turner, Inc.	Transmission
Hardy Engineering	Transmission
Haverfield Aviation Inc	Transmission
HB Sequence FKA Next	Transmission
Heaton Erecting	Transmission
HENKELS & MCCOY, INC	Distribution, Transmission
Hertz Equipment	Transmission
High Voltage Specialists, Inc.	Transmission
HIGHER GROUND ELECTRIC CO	Distribution
Hobbs Grassing & Dozer Work, Inc.	Forestry
Hussey, Gay, Bell & DeYoung, Inc	Land
Irby Construction	Distribution,Transmission
J.W. Henderson	Forestry
Jenco Sales & Rental	Transmission
Jenkins Relay and Control, Inc.	Transmission
Jordan Engineering, Inc.	Land
Jordan, Jones & Goulding	Land
Just Another Trucking Co., Inc.	Transmission
Kern-Coleman & Co. LLC	Land
Kris Deuar & Associates, Inc.	Distribution
Lamar Edwards & Associates, Inc.	Land
Laura Casey or Laura's CAD Service	Land

CONTRACTOR	Business Unit
Lawn Pro	Forestry
Lee Engineering & Construction	Forestry,Transmission
Lojo Transportation, LLC	Transmission
Long Engineering, Inc.	Land, Transmission
Lowe & Associates d/b/a LAI Engineering	Land
Lowe Engineers, LLC	Land
Mabey Bridge and Shoring	Transmission
MACTEC	Transmission
Mammoet USA, Inc.	Transmisson
Marietta Fence	Transmission
Martin - Robins	Transmission
MasTec North America	Distribution
Maxim Crane	Transmission
MB&R Engineering	Transmission
Mesa	Transmission
Metro Engineering & Surveying, Inc.	Land
Metrosite	Forestry
Moonshower's, Inc.	Land
Morgan Corporation	Transmission
Nash Grading and Excavating	Forestry,Transmission
NEC Rentals	Transmission
Neff Rentals	Transmission
Onsite Energy	Land
Osmose Utilities Services, Inc.	Distribution
Overland Contracting	Transmission
Palmetto Line Contractors, Inc.	Forestry
Patterson & Dewar Engineers, Inc.	Land, Transmission
Paul Davis Lumber	Transmission
Penske Truck Rental	Transmission
Phoenix Crane	Transmission
Phoenix Solutions	Transmission
Pike Electric	Forestry,Distribution,Trans
Pollard Trucking	Transmission
Powell & Sons Equipment Company	Transmission
Power Delivery Consultants	Transmission
Power Distribution Services, Inc.	Distribution
Power Engineers Inc.	Forestry
PowerSecure, Inc	Distribution
Preston Testing & Engineering	Transmission
PRO LINE CONTRACTORS, INC	Distribution
Quality Assured Controls, Inc.	Transmission
Quality Custom Services	Transmission
Quality Forest Roads, LLC	Forestry
Qualtiy Service Corp.	Transmission
R.A. Kelsey, Inc	Transmission
R. R. Cassidy, Inc.	Transmission
Raeford Land Clearing, Inc.	Forestry,Transmission
Rite-A-Way Mowers	Forestry
Road 1 Express Inc.	Line Construction
Rotoworks	Forestry
ROWAN COMMUNICATIONS, INC	Distribution

CONTRACTOR	Business Unit
RSC Rentals	Transmission
Rufus E. Owens	Transmission
Russo Corporation	Transmission
S&C Electric Company	Distribution,Transmission
S&W Excavating & Grading, Inc.	Forestry,Transmission
S W Georgia Environmental Inc.	Forestry
S.Nelson & Associates	Transmission,Land
SBX Technologies, LLC	Transmission
Scott Powerline	Transmission
SE Erosion Control	Transmission
Selectek	Transmission
Service Electric Company	Transmission
SERVICE ELECTRIC CO.	Distribution
Service Resource Corp of FLA	Transmission,Land
Shaw Energy Delivery Services, Inc.	Distribution
Smith Real Estate Services, Inc.	Land
Smith-Gray Electric Company	Transmission
Statewide Tree & Landscape	Forestry
Southeast Woodland Services	Forestry
Southern Earth Construction	Forestry
Southern General Contracting and Landscaping, LLC	Distribution
Southern Hydro Vac Inc.	Transmission, Distribution
Southern Line Services, Inc.	Forestry
Southeastern Erosion Control	Transmission
Southway Crane	Transmission
SUMTER UTILITIES, INC	Distribution,Transmission
Sunbelt Rentals	Transmission
Synergetic Design, Inc.	Distribution
System One Holdings, LLC, (former name - Hudson Global Resources)	Transmission
TTL	Transmission
Terracon Consultants, Inc.	Transmission
The Energy Group	Distribution
Hussey, Gay, Bell & DeYoung, Inc	Land
The Robinson Realty Group	Land
The Victor and Associates, Inc.	Land
Think Resources, Inc.	Distribution,Land
Thomas & Hutton	Land
Thomason Engineering, LLC	Land
Thompson Grading	Transmission
Tibbitts Land Surveying, Inc.	Land
Tifton Contractors Inc.	Forestry
Tiger Blasting	Transmission
Tim's Crane & Rigging	Transmission
Toole Surveying Company, Inc	Land
Tovey & Tumlin	Line Construction
Townsend Tree Service, Inc.	Forestry
Traffic Specialities Inc.	Transmission
Traffic Troopers, Inc.	Distribution
Trees Inc.	Forestry

CONTRACTOR	Business Unit
Trees Unlimited	Forestry
Tri Scapes, Inc.	Forestry; Transmission
Tri State Drilling	Transmission
TRI-COUNTY UNDERGROUND, INC	Distribution
UAP Timberland	Forestry
UC Synergetics Inc, fka PowerComm Engineering	Transmission
UC Synergetic, Inc	Distribution
USS	Distribution
US Traffic Technologies, Inc.	Distribution
United Consulting Group	Transmission
United Rentals	Transmission
Universal Field Services	Land
U-TEC CONSTRUCTION, INC	Distribution
Utilicon Services, Inc.	Distribution,Transmission
Utility Line Construction Services, Inc.	Distribution,Transmission
Utility Consultants, Inc. (UCI)	Distribution
UTILITY LINES CONSTRUCTION SERVICES, INC	Distribution
Utility Pole Technologies, Inc.	Distribution
Utility Support Systems, Inc.	Distribution
UTILIX CORPORATION	Distribution
Utilx Corporation	Distribution
WPC Inc., a terracon company	Transmission
W.R. Toole Engineers, Inc.	Land
Wallace Trucking	Forestry, Transmission
Watts & Brwning Engineers, Inc.	Land
Webb's Erection, Inc.	Transmission
West Vegetation Management Services (DBA WVMS)	Forestry
White Crane	Transmission
Wilcan, Inc. d/b/a Basic Environmental Land Clearing	Forestry
WILLIAMS CONTRACTING, INC.	
Williams Electric Company	Distribution
Winter Construction Co.	Forestry
Wolf Tree Inc.	Forestry
Woods Plus	Forestry
X-Line, Inc.	Distribution
Yancey Power Systems/ Yancey Bros	Transmission
Z&R Fence and Land Maintenance	Transmission

Georgia DOT Project: CSMSL-0008-00(690) Chatham
GDOT P.I. #0008690

DESIGN-BUILD
MEMORANDUM OF UNDERSTANDING

between the
Georgia Department of Transportation (hereafter the DEPARTMENT)
and
Georgia Power Company (hereafter the OWNER)

Whereas the DEPARTMENT proposes to undertake a design-build project hereafter referred to as PROJECT to extend the Jimmy Deloach Parkway in Chatham, Georgia by contract through competitive bidding procedures; and,

Whereas the DEPARTMENT will accomplish the PROJECT through a Design Consultant, Design Consultant Team and/or Contractor hereafter referred to as CONTRACTOR; and,

Whereas, where OWNER has property rights ("Prior Rights") at the location of the PROJECT, OWNER will provide written evidence as to said prior rights within the area and will provide written documentation of prior rights relating to any individual crossing or Utility Facility, at the location of the PROJECT; and

Whereas, OWNER acknowledges that, generally, absent a showing of prior rights, the costs of relocation, protection, removal, or adjustment performed by OWNER shall be borne by OWNER; and

Whereas, pursuant to O.C.G.A. § 32-6-170(b), DEPARTMENT is authorized to pay or participate in the payment of the costs of relocation, protection, or adjustment of OWNER'S facilities where DEPARTMENT has made the determination that (i) such payments are in the best interest of the public and necessary in order to expedite the staging of the design-build project; and (ii) the costs of the removal, relocation, protection, or adjustment of such facilities are included as part of the Contract between the Department and the Department's roadway contractor for the design-build project; and

1. Type of Utility

OWNER has the following utility facilities which may need to be adjusted or relocated as a result of the proposed PROJECT:

Type of facility or facilities of OWNER:
_____Domestic water mains and distribution lines and associated appurtenances
_____Sanitary Sewer facilities and/or Storm Drainage System
_____Electrical Distribution (overhead and underground) wires, poles, etc.
__X__Electrical Transmission (overhead and underground) wires, poles, etc.
_____Natural Gas Distribution Facilities (underground)
_____Natural Gas Transmission Facilities (underground)
_____Petroleum Pipeline (underground)
_____Telecommunications facilities and equipment
_____Cable TV facilities
_____Street Lighting
_____Internet Data Service
_____Other Facilities (Description) _____

2. New Utility Facilities Proposed (Betterment)

OWNER desires the following to be installed as new additional facilities within the PROJECT. Insert here or attach a detailed description of proposed new additional utility installations:

_____

_____

3. Assignment of Responsibilities for Design and Construction

This MEMORANDUM OF UNDERSTANDING and the following shall serve as a *basis* for assignment of responsibilities and costs for the DEPARTMENT to enter into a Standard Utility Agreement (SUA) or Contract Item Agreement (CIA), if necessary, with OWNER once the PROJECT is awarded to the CONTRACTOR. For a PROJECT implementation, GDOT will not have in its possession exact costing plans to be utilized to determine exact locations of the removal, relocation, protection, or adjustment. However, Overhead/Subsurface Utility Engineering (SUE) investigations plans exist providing the best information and signifying the layout of known existing facilities. Please use these plans for developing the final determination of services as indicated below. The CONTRACTOR developed plans will be provided to the OWNER for after the design build project is awarded by GDOT which shall be used by the CONTRACTOR as the final basis for the SUA or CIA.

OWNER hereby intends to:

A. OWNER, at the DEPARTMENT'S cost, will provide the following services for the properties for which it has established prior rights (check to signify):

Design __x__
Construction __x__

B. OWNER, for any removal, relocation, protection, or adjustments that do not have prior rights will allow their facilities to be placed into the DEPARTMENT'S contract for the following services pursuant to O.C.G.A. § 32-6-170(b). The DEPARTMENT will add the removal, relocation, protection, or adjustment costs to the overall PROJECT's cost. The OWNER will be responsible for all design work cost (check to signify):

Construction _____

C. OWNER, at OWNER'S cost, will provide the following services (check to signify):

Design _____
Construction _____

The following is hereby mutually agreed to and understood by both parties:

1. The identification of existing facilities including preparation of Overhead/Subsurface Utility Engineering (SUE) investigations plans will be accomplished by the DEPARTMENT prior to award of the PROJECT and thereafter supplemented by the CONTRACTOR.

2. The CONTRACTOR shall coordinate reviews of the utility relocation information and obtain acceptance from the OWNER and DEPARTMENT when required. However; the OWNER shall apply for and obtain any required permits from the DEPARTMENT and perform any final design or proprietary design needed to administer its own relocation work if the work will not be included in the PROJECT (list any work <u>not included</u> in the PROJECT in space provided above). If the preliminary plans indicate that no conflict exists, and the OWNER concurs with this information, the OWNER shall provide a letter of "no conflict" to the CONTRACTOR.

3. The CONTRACTOR will research the property interest of each OWNER and present the findings to the DEPARTMENT and OWNER for approval. The CONTRACTOR will coordinate resolution of any disputed items. The plans and estimate for the utility work shall be subject to approval of both the DEPARTMENT and the OWNER prior to construction. If the OWNER chooses to include the subject utility work in the PROJECT and the research indicates that no property interest exists, the OWNER did not indicate Section 3B above, and the OWNER cannot refute this finding with evidence that would substantiate the property interest in legal proceedings, the OWNER shall provide confirmation in writing that OWNER will reimburse the DEPARTMENT for any adjustment or relocations necessary; and an agreement will be prepared and executed in accordance with the DEPARTMENT'S "Utility Accommodation Policy and Standards Manual". If the OWNER chooses to perform its own relocations and the OWNER holds no property interest as stated above, the OWNER shall confirm in writing that the OWNER will relocate its own facilities at no cost to the DEPARTMENT and the CONTRACTOR.

4. All construction engineering and contract supervision shall be the responsibility of the DEPARTMENT and the CONTRACTOR to ensure that all utility work included in the PROJECT is accomplished in accordance with the PROJECT's plans and specifications. The CONTRACTOR will consult with the OWNER before authorizing any changes or deviations which affect the OWNER's facility.

5. For Utility work included in the PROJECT, the CONTRACTOR shall ensure that the construction and installation of the OWNER'S facilities is performed by a contractor prequalified/registered with both the DEPARTMENT and the OWNER. The CONTRACTOR shall contact the OWNER to obtain the current list of the OWNER's prequalified Contractors.

6. For Utility work included in the PROJECT's contract, the OWNER or the OWNER's Consultant shall have the right to visit and inspect the work at any time and advise the CONTRACTOR and the DEPARTMENT'S Engineer of any observed discrepancies or potential issues. The DEPARTMENT agrees to notify the OWNER when all utility work is completed and ready for final inspection by the OWNER.

7. Upon Maintenance Acceptance or Final Acceptance of the utility work included in the contract and upon certification by the DEPARTMENT'S Engineer and the OWNER, that the work has been completed in accordance with the plans and specifications, the OWNER will accept the adjusted, relocated, and additional facilities and will thereafter operate and maintain said facilities located within the PROJECT right of way subject to the DEPARTMENT'S "Utility Accommodation Policy and Standards Manual, current edition" and any agreements in effect without further cost to the DEPARTMENT or it's CONTRACTOR.

8. For the purpose of utility coordination, relocation and reimbursement matters, the OWNER shall cooperate with the CONTRACTOR in the same manner as if coordinating directly with the DEPARTMENT in accordance with the laws of the State of Georgia, the DEPARTMENT'S "Utility Accommodation Policy and Standards Manual, current edition" and any agreements in effect between the DEPARTMENT and OWNER. The OWNER agrees to cooperate in good faith with the CONTRACTOR and to respond to all requests for information or meetings required to reach a resolution of any disputed items.

The Memorandum of Understanding will be incorporated into the project contract by reference or Exhibit.

APPROVED FOR THE OWNER BY:

Mark Tilden 2-8-11

(Signature) (Date)

PROJECT MANAGER- DOT / JOINT USE

(Title)

APPROVED FOR THE DEPARTMENT BY:

Jeff Baker TLB 4-14-11

(Signature) (Date)

STATE UTILITIES ENGINEER

CONTRACTOR	Business Unit
AAA Cooper Transportation	Transmission
Accura Engineering	Transmission
Acer Environmental	Transmission
Advanced Contractors	Transmission
Advanced Rentals	Transmission
AEC, Inc	Land
Aerotek	Transmission
Aerotek Energy Services	Land
Andrews Excavation	Transmission
Appalachian Surveying Co., Inc.	Land
Asplundh Tree Expert Company	Forestry
Apogee Engineers	Transmission
ASSOCIATED DIVERSIFIED SERVICES	Distribution, Transmission
Atlas Sales and Leasing	Transmission
Aubrey Silvey Enterprises, Inc	Transmission
Augusta Crane & Rigging	Transmission
AWP, Inc.	Distribution
Azalea Fence Company	Transmission
B&G Equipment Rental	Transmission
Barrett Utilities and Construction Co.	Distribution
Basic Discoveries	Land
Bay-Dean, LLC	Transmission
Black & Veatch	Transmission
Boots Sears Company, Inc.	Transmission
BridgeWater & Associates, Inc.	Land
Brysan Utility Contractors	Transmission
Burford's Tree Surgeons, Inc.	Forestry,Transmission
Burns & McDonnel	Transmission
CA Murren and Sons of Georgia	Transmission
Cable East, Inc.	Distribution
Caffrey Construction	Transmission
Can Fer Construction	Transmission
Cartersville Fence Co.	Transmission
CCU Southeastern Utilities of Georgia	Distribution
CDI Corporation	Distribution
Central Fence Co.	Transmission
Chain Electric Company	Distribution, Transmission
Cindy's Trucking	Transmission
Clance Construction	Forestry
Clean Water Consultants	Transmission
Client Services, Inc.	Land
Colston Contracting	Forestry
Commonwealth & Associates	Transmission
Corbett Electrical Construction, Inc.	Distribution
CURRAHEE UTILITY CONTRACTORS, INC	Distribution
DELTA EQUIPMENT ENTERPRISES, INC	Distribution
Design Master Services, Inc.	Land
Development Planning & Engineering, Inc	Land
DILLARD SMITH CONSTRUCTION CO.	Distribution, Transmission
Dinsmore Grading	Transmission
Direct Connect	Transmission, Distribution

CONTRACTOR	Business Unit
DMS Services, Inc.	Transmission
Dogwood Lawn Care	Forestry
Donaldson, Garrett & Associates, Inc.	Land
Ecological Solutions Inc.	Environmental Affairs
ECS Southeast	Transmission
Electrical Control Service, Inc.	Transmission
Electricon, Inc.	Transmission
Ellis Astin Grading Company	Transmission
ELMO CARTER CONSTRUCTION CO. Inc.	Transmission, Distribution
EMC Engineering Services, Inc.	Land
Enercom fka Beckett & Larue	Transmission
ENGlobal Land Inc.	Land
Ensminger's Crane Service	Transmission
Evergreen Tree & Turf Care Inc.	Forestry
Expert Site Services	Transmission
FARLEY TECHNOLOGIES, INC	Distribution
Farley Technologies, Inc.	Distribution
Fred Wilson & Associates, Inc.	Transmission
G&M Contractors	Forestry
Gene Blackburn Engineering	Transmission
Georgia Erosion Control Center	Transmission
Georgia Tech Research Corporation	Forestry
Georgia Utility Services, Inc.	Forestry
GeoSurvey, Ltd.	Land
Global Rental Company	Transmission, Fleet
Graves Construction	Transmission
Graves Construction Services, Inc.	Transmission
Great British Gardner	Forestry
Greenhorne & O'Mara Inc.	Land
Guy M. Turner, Inc.	Transmission
Hardy Engineering	Transmission
Haverfield Aviation Inc	Transmission
HB Sequence FKA Next	Transmission
Heaton Erecting	Transmission
HENKELS & MCCOY, INC	Distribution, Transmission
Hertz Equipment	Transmission
High Voltage Specialists, Inc.	Transmission
HIGHER GROUND ELECTRIC CO	Distribution
Hobbs Grassing & Dozer Work, Inc.	Forestry
Hussey, Gay, Bell & DeYoung, Inc	Land
Irby Construction	Distribution,Transmission
J.W. Henderson	Forestry
Jenco Sales & Rental	Transmission
Jenkins Relay and Control, Inc.	Transmission
Jordan Engineering, Inc.	Land
Jordan, Jones & Goulding	Land
Just Another Trucking Co., Inc.	Transmission
Kern-Coleman & Co. LLC	Land
Kris Deuar & Associates, Inc.	Distribution
Lamar Edwards & Associates, Inc.	Land
Laura Casey or Laura's CAD Service	Land

CONTRACTOR	Business Unit
Lawn Pro	Forestry
Lee Engineering & Construction	Forestry,Transmission
Lojo Transportation, LLC	Transmission
Long Engineering, Inc.	Land, Transmission
Lowe & Associates d/b/a LAI Engineering	Land
Lowe Engineers, LLC	Land
Mabey Bridge and Shoring	Transmission
MACTEC	Transmission
Mammoet USA, Inc.	Transmisson
Marietta Fence	Transmission
Martin - Robins	Transmission
MasTec North America	Distribution
Maxim Crane	Transmission
MB&R Engineering	Transmission
Mesa	Transmission
Metro Engineering & Surveying, Inc.	Land
Metrosite	Forestry
Moonshower's, Inc.	Land
Morgan Corporation	Transmission
Nash Grading and Excavating	Forestry,Transmission
NEC Rentals	Transmission
Neff Rentals	Transmission
Onsite Energy	Land
Osmose Utilities Services, Inc.	Distribution
Overland Contracting	Transmission
Palmetto Line Contractors, Inc.	Forestry
Patterson & Dewar Engineers, Inc.	Land, Transmission
Paul Davis Lumber	Transmission
Penske Truck Rental	Transmission
Phoenix Crane	Transmission
Phoenix Solutions	Transmission
Pike Electric	Forestry,Distribution,Trans
Pollard Trucking	Transmission
Powell & Sons Equipment Company	Transmission
Power Delivery Consultants	Transmission
Power Distribution Services, Inc.	Distribution
Power Engineers Inc.	Forestry
PowerSecure, Inc	Distribution
Preston Testing & Engineering	Transmission
PRO LINE CONTRACTORS, INC	Distribution
Quality Assured Controls, Inc.	Transmission
Quality Custom Services	Transmission
Quality Forest Roads, LLC	Forestry
Qualtiy Service Corp.	Transmission
R.A. Kelsey, Inc	Transmission
R. R. Cassidy, Inc.	Transmission
Raeford Land Clearing, Inc.	Forestry,Transmission
Rite-A-Way Mowers	Forestry
Road 1 Express Inc.	Line Construction
Rotoworks	Forestry
ROWAN COMMUNICATIONS, INC	Distribution

CONTRACTOR	Business Unit
RSC Rentals	Transmission
Rufus E. Owens	Transmission
Russo Corporation	Transmission
S&C Electric Company	Distribution,Transmission
S&W Excavating & Grading, Inc.	Forestry,Transmission
S W Georgia Environmental Inc.	Forestry
S.Nelson & Associates	Transmission,Land
SBX Technologies, LLC	Transmission
Scott Powerline	Transmission
SE Erosion Control	Transmission
Selectek	Transmission
Service Electric Company	Transmission
SERVICE ELECTRIC CO.	Distribution
Service Resource Corp of FLA	Transmission,Land
Shaw Energy Delivery Services, Inc.	Distribution
Smith Real Estate Services, Inc.	Land
Smith-Gray Electric Company	Transmission
Statewide Tree & Landscape	Forestry
Southeast Woodland Services	Forestry
Southern Earth Construction	Forestry
Southern General Contracting and Landscaping, LLC	Distribution
Southern Hydro Vac Inc.	Transmission, Distribution
Southern Line Services, Inc.	Forestry
Southeastern Erosion Control	Transmission
Southway Crane	Transmission
SUMTER UTILITIES, INC	Distribution,Transmission
Sunbelt Rentals	Transmission
Synergetic Design, Inc.	Distribution
System One Holdings, LLC, (former name - Hudson Global Resources)	Transmission
TTL	Transmission
Terracon Consultants, Inc.	Transmission
The Energy Group	Distribution
Hussey, Gay, Bell & DeYoung, Inc	Land
The Robinson Realty Group	Land
The Victor and Associates, Inc.	Land
Think Resources, Inc.	Distribution,Land
Thomas & Hutton	Land
Thomason Engineering, LLC	Land
Thompson Grading	Transmission
Tibbitts Land Surveying, Inc.	Land
Tifton Contractors Inc.	Forestry
Tiger Blasting	Transmission
Tim's Crane & Rigging	Transmission
Toole Surveying Company, Inc	Land
Tovey & Tumlin	Line Construction
Townsend Tree Service, Inc.	Forestry
Traffic Specialities Inc.	Transmission
Traffic Troopers, Inc.	Distribution
Trees Inc.	Forestry

CONTRACTOR	Business Unit
Trees Unlimited	Forestry
Tri Scapes, Inc.	Forestry; Transmission
Tri State Drilling	Transmission
TRI-COUNTY UNDERGROUND, INC	Distribution
UAP Timberland	Forestry
UC Synergetics Inc, fka PowerComm Engineering	Transmission
UC Synergetic, Inc	Distribution
USS	Distribution
US Traffic Technologies, Inc.	Distribution
United Consulting Group	Transmission
United Rentals	Transmission
Universal Field Services	Land
U-TEC CONSTRUCTION, INC	Distribution
Utilicon Services, Inc.	Distribution,Transmission
Utility Line Construction Services, Inc.	Distribution,Transmission
Utility Consultants, Inc. (UCI)	Distribution
UTILITY LINES CONSTRUCTION SERVICES, INC	Distribution
Utility Pole Technologies, Inc.	Distribution
Utility Support Systems, Inc.	Distribution
UTILIX CORPORATION	Distribution
Utilx Corporation	Distribution
WPC Inc., a terracon company	Transmission
W.R. Toole Engineers, Inc.	Land
Wallace Trucking	Forestry, Transmission
Watts & Brwning Engineers, Inc.	Land
Webb's Erection, Inc.	Transmission
West Vegetation Management Services (DBA WVMS)	Forestry
White Crane	Transmission
Wilcan, Inc. d/b/a Basic Environmental Land Clearing	Forestry
WILLIAMS CONTRACTING, INC.	
Williams Electric Company	Distribution
Winter Construction Co.	Forestry
Wolf Tree Inc.	Forestry
Woods Plus	Forestry
X-Line, Inc.	Distribution
Yancey Power Systems/ Yancey Bros	Transmission
Z&R Fence and Land Maintenance	Transmission

Georgia DOT Project: CSMSL-0008-00(690) Chatham
GDOT P.I. #0008690

DESIGN-BUILD
MEMORANDUM OF UNDERSTANDING

between the

Georgia Department of Transportation (hereafter the DEPARTMENT)

and

Southern Natural Gas Company (hereafter the OWNER)

Whereas the DEPARTMENT proposes to undertake a design-build project hereafter referred to as PROJECT to extend the Jimmy Deloach Parkway in Chatham, Georgia by contract through competitive bidding procedures; and,

Whereas the DEPARTMENT will accomplish the PROJECT through a Design Consultant, Design Consultant Team and/or Contractor hereafter referred to as CONTRACTOR; and,

Whereas, where OWNER has property rights ("Prior Rights") at the location of the PROJECT, OWNER will provide written evidence as to said prior rights within the area and will provide written documentation of prior rights relating to any individual crossing or Utility Facility, at the location of the PROJECT; and

Whereas, OWNER acknowledges that, generally, absent a showing of prior rights, the costs of relocation, protection, removal, or adjustment performed by OWNER shall be borne by OWNER; and

Whereas, pursuant to O.C.G.A. § 32-6-170(b), DEPARTMENT is authorized to pay or participate in the payment of the costs of relocation, protection, or adjustment of OWNER'S facilities where DEPARTMENT has made the determination that (i) such payments are in the best interest of the public and necessary in order to expedite the staging of the design-build project; and (ii) the costs of the removal, relocation, protection, or adjustment of such facilities are included as part of the Contract between the Department and the Department's roadway contractor for the design-build project; and

1. Type of Utility

OWNER has the following utility facilities which may need to be adjusted or relocated as a result of the proposed PROJECT:

Type of facility or facilities of OWNER:

_____ Domestic water mains and distribution lines and associated appurtenances
_____ Sanitary Sewer facilities and/or Storm Drainage System
_____ Electrical Distribution (overhead and underground) wires, poles, etc.
_____ Electrical Transmission (overhead and underground) wires, poles, etc.
_____ Natural Gas Distribution Facilities (underground)
X Natural Gas Transmission Facilities (underground)
_____ Petroleum Pipeline (underground)
_____ Telecommunications facilities and equipment
_____ Cable TV facilities
_____ Street Lighting
_____ Internet Data Service
_____ Other Facilities (Description) _____

2. New Utility Facilities Proposed (Betterment)

OWNER desires the following to be installed as new additional facilities within the PROJECT. Insert here or attach a detailed description of proposed new additional utility installations:

N/A

3. Assignment of Responsibilities for Design and Construction

This MEMORANDUM OF UNDERSTANDING and the following shall serve as a *basis* for assignment of responsibilities and costs for the DEPARTMENT to enter into a Standard Utility Agreement (SUA) or Contract Item Agreement (CIA), if necessary, with OWNER once the PROJECT is awarded to the CONTRACTOR. For a PROJECT implementation, GDOT will not have in its possession exact costing plans to be utilized to determine exact locations of the removal, relocation, protection, or adjustment. However, Overhead/Subsurface Utility Engineering (SUE) investigations plans exist providing the best information and signifying the layout of known existing facilities. Please use these plans for developing the final determination of services as indicated below. The CONTRACTOR developed plans will be provided to the OWNER for after the design build project is awarded by GDOT which shall be used by the CONTRACTOR as the final basis for the SUA or CIA.

OWNER hereby intends to:

A. OWNER, at the DEPARTMENT'S cost, will provide the following services for the properties for which it has established prior rights (check to signify):

Design X
Construction X

B. OWNER, for any removal, relocation, protection, or adjustments that do not have prior rights will allow their facilities to be placed into the DEPARTMENT'S contract for the following services pursuant to O.C.G.A. § 32-6-170(b). The DEPARTMENT will add the removal, relocation, protection, or adjustment costs to the overall PROJECT's cost. The OWNER will be responsible for all design work cost (check to signify):

Construction **N/A**

C. OWNER, at OWNER'S cost, will provide the following services (check to signify):

Design **N/A**
Construction **N/A**

The following is hereby mutually agreed to and understood by both parties:

1. The identification of existing facilities including preparation of Overhead/Subsurface Utility Engineering (SUE) investigations plans will be accomplished by the DEPARTMENT prior to award of the PROJECT and thereafter supplemented by the CONTRACTOR.

2. The CONTRACTOR shall coordinate reviews of the utility relocation information and obtain acceptance from the OWNER and DEPARTMENT when required. However; the OWNER shall apply for and obtain any required permits from the DEPARTMENT and perform any final design or proprietary design needed to administer its own relocation work if the work will not be included in the PROJECT (list any work <u>not included</u> in the PROJECT in space provided above). If the preliminary plans indicate that no conflict exists, and the OWNER concurs with this information, the OWNER shall provide a letter of "no conflict" to the CONTRACTOR.

3. The CONTRACTOR will research the property interest of each OWNER and present the findings to the DEPARTMENT and OWNER for approval. The CONTRACTOR will coordinate resolution of any disputed items. The plans and estimate for the utility work shall be subject to approval of both the DEPARTMENT and the OWNER prior to construction. If the OWNER chooses to include the subject utility work in the PROJECT and the research indicates that no property interest exists, the OWNER did not indicate Section 3B above, and the OWNER cannot refute this finding with evidence that would substantiate the property interest in legal proceedings, the OWNER shall provide confirmation in writing that OWNER will reimburse the DEPARTMENT for any adjustment or relocations necessary; and an agreement will be prepared and executed in accordance with the DEPARTMENT'S "Utility Accommodation Policy and Standards Manual". If the OWNER chooses to perform its own relocations and the OWNER holds no property interest as stated above, the OWNER shall confirm in writing that the OWNER will relocate its own facilities at no cost to the DEPARTMENT and the CONTRACTOR.

4. All construction engineering and contract supervision shall be the responsibility of the DEPARTMENT and the CONTRACTOR to ensure that all utility work included in the PROJECT is accomplished in accordance with the PROJECT's plans and specifications. The CONTRACTOR will consult with the OWNER before authorizing any changes or deviations which affect the OWNER's facility.

5. For Utility work included in the PROJECT, the CONTRACTOR shall ensure that the construction and installation of the OWNER'S facilities is performed by a contractor prequalified/registered with both the DEPARTMENT and the OWNER. The CONTRACTOR shall contact the OWNER to obtain the current list of the OWNER's prequalified Contractors.

6. For Utility work included in the PROJECT's contract, the OWNER or the OWNER's Consultant shall have the right to visit and inspect the work at any time and advise the CONTRACTOR and the DEPARTMENT'S Engineer of any observed discrepancies or potential issues. The DEPARTMENT agrees to notify the OWNER when all utility work is completed and ready for final inspection by the OWNER.

7. Upon Maintenance Acceptance or Final Acceptance of the utility work included in the contract and upon certification by the DEPARTMENT'S Engineer and the OWNER, that the work has been completed in accordance with the plans and specifications, the OWNER will accept the adjusted, relocated, and additional facilities and will thereafter operate and maintain said facilities located within the PROJECT right of way subject to the DEPARTMENT'S "Utility Accommodation Policy and Standards Manual, current edition" and any agreements in effect without further cost to the DEPARTMENT or it's CONTRACTOR.

8. For the purpose of utility coordination, relocation and reimbursement matters, the OWNER shall cooperate with the CONTRACTOR in the same manner as if coordinating directly with the DEPARTMENT in accordance with the laws of the State of Georgia, the DEPARTMENT'S "Utility Accommodation Policy and Standards Manual, current edition" and any agreements in effect between the DEPARTMENT and OWNER. The OWNER agrees to cooperate in good faith with the CONTRACTOR and to respond to all requests for information or meetings required to reach a resolution of any disputed items.

The Memorandum of Understanding will be incorporated into the project contract by reference or Exhibit.

APPROVED FOR THE OWNER BY:

Adrienne G. Mason — 4-27-11
(Signature) — (Date)
Adrienne G. Mason
Agent and Attorney-in-fact
(Title)

APPROVED FOR THE DEPARTMENT BY:

Jeff Baker / mss — 4-29-11
(Signature) — (Date)

STATE UTILITIES ENGINEER

Georgia DOT Project: CSMSL-0008-00(690) Chatham
GDOT P.I. #0008690

DESIGN-BUILD
MEMORANDUM OF UNDERSTANDING
between the
Georgia Department of Transportation (hereafter the DEPARTMENT)
and
Level 3 Communications, LLC (hereafter the OWNER)

Whereas the DEPARTMENT proposes to undertake a design-build project hereafter referred to as PROJECT to extend the Jimmy Deloach Parkway in Chatham, Georgia by contract through competitive bidding procedures; and,

Whereas the DEPARTMENT will accomplish the PROJECT through a Design Consultant, Design Consultant Team and/or Contractor hereafter referred to as CONTRACTOR; and,

Whereas, where OWNER has property rights ("Prior Rights") at the location of the PROJECT, OWNER will provide written evidence as to said prior rights within the area and will provide written documentation of prior rights relating to any individual crossing or Utility Facility, at the location of the PROJECT; and

Whereas, OWNER acknowledges that, generally, absent a showing of prior rights, the costs of relocation, protection, removal, or adjustment performed by OWNER shall be borne by OWNER; and

Whereas, pursuant to O.C.G.A. § 32-6-170(b), DEPARTMENT is authorized to pay or participate in the payment of the costs of relocation, protection, or adjustment of OWNER'S facilities where DEPARTMENT has made the determination that (i) such payments are in the best interest of the public and necessary in order to expedite the staging of the design-build project; and (ii) the costs of the removal, relocation, protection, or adjustment of such facilities are included as part of the Contract between the Department and the Department's roadway contractor for the design-build project; and

1. Type of Utility

OWNER has the following utility facilities which may need to be adjusted or relocated as a result of the proposed PROJECT:

Type of facility or facilities of OWNER:
_____Domestic water mains and distribution lines and associated appurtenances
_____Sanitary Sewer facilities and/or Storm Drainage System
_____Electrical Distribution (overhead and underground) wires, poles, etc.
_____Electrical Transmission (overhead and underground) wires, poles, etc.
_____Natural Gas Distribution Facilities (underground)
_____Natural Gas Transmission Facilities (underground)
_____Petroleum Pipeline (underground)
___x__Telecommunications facilities and equipment
_____Cable TV facilities
_____Street Lighting
_____Internet Data Service
_____Other Facilities (Description) _____

2. New Utility Facilities Proposed (Betterment)

OWNER desires the following to be installed as new additional facilities within the PROJECT. Insert here or attach a detailed description of proposed new additional utility installations:

_____

_____

3. Assignment of Responsibilities for Design and Construction

This MEMORANDUM OF UNDERSTANDING and the following shall serve as a *basis* for assignment of responsibilities and costs for the DEPARTMENT to enter into a Standard Utility Agreement (SUA) or Contract Item Agreement (CIA), if necessary, with OWNER once the PROJECT is awarded to the CONTRACTOR. For a PROJECT implementation, GDOT will not have in its possession exact costing plans to be utilized to determine exact locations of the removal, relocation, protection, or adjustment. However, Overhead/Subsurface Utility Engineering (SUE) investigations plans exist providing the best information and signifying the layout of known existing facilities. Please use these plans for developing the final determination of services as indicated below. The CONTRACTOR developed plans will be provided to the OWNER for after the design build project is awarded by GDOT which shall be used by the CONTRACTOR as the final basis for the SUA or CIA.

OWNER hereby intends to:

A. OWNER, at the DEPARTMENT'S cost, will provide the following services for the properties for which it has established prior rights (check to signify):

Design _____
Construction _____

B. OWNER, for any removal, relocation, protection, or adjustments that do not have prior rights will allow their facilities to be placed into the DEPARTMENT'S contract for the following services pursuant to O.C.G.A. § 32-6-170(b). The DEPARTMENT will add the removal, relocation, protection, or adjustment costs to the overall PROJECT's cost. The OWNER will be responsible for all design work cost (check to signify):

Construction __x__

C. OWNER, at OWNER'S cost, will provide the following services (check to signify):

Design _____
Construction _____

The following is hereby mutually agreed to and understood by both parties:

1. The identification of existing facilities including preparation of Overhead/Subsurface Utility Engineering (SUE) investigations plans will be accomplished by the DEPARTMENT prior to award of the PROJECT and thereafter supplemented by the CONTRACTOR.

2. The CONTRACTOR shall coordinate reviews of the utility relocation information and obtain acceptance from the OWNER and DEPARTMENT when required. However; the OWNER shall apply for and obtain any required permits from the DEPARTMENT and perform any final design or proprietary design needed to administer its own relocation work if the work will not be included in the PROJECT (list any work not included in the PROJECT in space provided above). If the preliminary plans indicate that no conflict exists, and the OWNER concurs with this information, the OWNER shall provide a letter of "no conflict" to the CONTRACTOR.

3. The CONTRACTOR will research the property interest of each OWNER and present the findings to the DEPARTMENT and OWNER for approval. The CONTRACTOR will coordinate resolution of any disputed items. The plans and estimate for the utility work shall be subject to approval of both the DEPARTMENT and the OWNER prior to construction. If the OWNER chooses to include the subject utility work in the PROJECT and the research indicates that no property interest exists, the OWNER did not indicate Section 3B above, and the OWNER cannot refute this finding with evidence that would substantiate the property interest in legal proceedings, the OWNER shall provide confirmation in writing that OWNER will reimburse the DEPARTMENT for any adjustment or relocations necessary; and an agreement will be prepared and executed in accordance with the DEPARTMENT'S "Utility Accommodation Policy and Standards Manual". If the OWNER chooses to perform its own relocations and the OWNER holds no property interest as stated above, the OWNER shall confirm in writing that the OWNER will relocate its own facilities at no cost to the DEPARTMENT and the CONTRACTOR.

4. All construction engineering and contract supervision shall be the responsibility of the DEPARTMENT and the CONTRACTOR to ensure that all utility work included in the PROJECT is accomplished in accordance with the PROJECT's plans and specifications. The CONTRACTOR will consult with the OWNER before authorizing any changes or deviations which affect the OWNER's facility.

5. For Utility work included in the PROJECT, the CONTRACTOR shall ensure that the construction and installation of the OWNER'S facilities is performed by a contractor prequalified/registered with both the DEPARTMENT and the OWNER. The CONTRACTOR shall contact the OWNER to obtain the current list of the OWNER's prequalified Contractors.

6. For Utility work included in the PROJECT's contract, the OWNER or the OWNER's Consultant shall have the right to visit and inspect the work at any time and advise the CONTRACTOR and the DEPARTMENT'S Engineer of any observed discrepancies or potential issues. The DEPARTMENT agrees to notify the OWNER when all utility work is completed and ready for final inspection by the OWNER.

7. Upon Maintenance Acceptance or Final Acceptance of the utility work included in the contract and upon certification by the DEPARTMENT'S Engineer and the OWNER, that the work has been completed in accordance with the plans and specifications, the OWNER will accept the adjusted, relocated, and additional facilities and will thereafter operate and maintain said facilities located within the PROJECT right of way subject to the DEPARTMENT'S "Utility Accommodation Policy and Standards Manual, current edition" and any agreements in effect without further cost to the DEPARTMENT or it's CONTRACTOR.

8. For the purpose of utility coordination, relocation and reimbursement matters, the OWNER shall cooperate with the CONTRACTOR in the same manner as if coordinating directly with the DEPARTMENT in accordance with the laws of the State of Georgia, the DEPARTMENT'S "Utility Accommodation Policy and Standards Manual, current edition" and any agreements in effect between the DEPARTMENT and OWNER. The OWNER agrees to cooperate in good faith with the CONTRACTOR and to respond to all requests for information or meetings required to reach a resolution of any disputed items.

The Memorandum of Understanding will be incorporated into the project contract by reference or Exhibit.

APPROVED FOR THE OWNER BY:

Danett Kennedy — 4-1-11

(Signature) (Date)

Danett Kennedy SR Manager

(Title)

APPROVED FOR THE DEPARTMENT BY:

Jeff Baker TLB — 4-14-11

(Signature) (Date)

STATE UTILITIES ENGINEER

Hannon, David

Subject: RE: Level-3 Approved Contractors List

Shiflett Enterprises, Inc.
CEO Robert Shiflett
56 Pine Road
Newnan, GA 30263
770-502-1565 Office
770-502-1576 Fax
shifent@bellsouth.net

TEAM FISHEL
Gary R. Cooper, Division Manager
6523 Marbut Road
Lithonia, GA 30058
Office: (770) 482-7550 x-108
Cell: (404) 219-2746
Fax: (770) 482-4804
www.teamfishel.com

Turnkey Project Management, LLC
Frank J. Hamilton, III, V. P. of Operations
34 W. Stephens Street
Winder, GA 30680
O - 770.868.1074
C - 770.601.9629
F – 770.868.1078
frank.hamilton@turnkeypm.net

Fountain Engineering
Michael Brown
Office: 305 451-6264
Fax: 305 451-2751
Email: calicialandry@fountainengineering.net

1.
Michael Mayes
Level 3, Communications LLC.
Outside Plant Engineer
345 Courtland St.
Atlanta Ga., 30308

404.394.0597 cell
404.253-1931 office
720.678-3493 fax

Date: September 19, 2001
First Use Date 2001 Specifications: November 1, 2002
Revised: June 1, 2010

DEPARTMENT OF TRANSPORTATION
STATE OF GEORGIA

SPECIAL PROVISION

Construction Activity Schedule

To satisfy the requirements of the NPDES Permit for storm water discharge, the successful bidder submit a Construction Activity Schedule that provides the timing of all major construction activities no later than ten calendar days following award of the Contract by the Department. Include in the schedule, the estimated project start date and the Completion Date specified in the Contract.

Send the Construction Activity Schedule to the Office of Construction Bidding Administration. The Construction Activity Schedule may be submitted with the executed contract.

Failure or refusal to submit the Construction Activity Schedule

Failure or refusal to submit the Construction Activity Schedule shall be deemed either:

1. Failure to execute the Contract, if the Contract has not yet been executed; or
2. Material breach of the Contract, if the Contract has been executed.

If the Contractor fails to execute the Contract as stated in Item 1, above, the bid bond shall become the property of the Department, not as a penalty, but in liquidated damages sustained. If the Contractor fails to submit the Construction Activity Schedule after execution of the Contract, the Contractor will be declared in default of the Contract.

The submittal of the Construction Activity Schedule is in addition to the Progress Schedule required by the Contract according to Section 108.03—PROSECUTION AND PROGRESS of the Specifications.

First Use Date 2001 Specifications: November 1, 2002
Revised: August 28, 2008

DEPARTMENT OF TRANSPORTATION
STATE OF GEORGIA

SPECIAL PROVISION

Add the following:

ESCROW BID DOCUMENTATION

Scope and Purpose

The purpose of this specification is to preserve the bid documents of the successful bidder (Contractor) for use by the parties in any claims or litigation between the Department and Contractor arising out of this contract.

The Contractor shall submit a legible copy of bid documentation used to prepare the bid for this contract to the Department. Such documentation shall be placed in escrow with a banking institution or other bonded document storage facility and preserved by that institution/facility as specified in the following sections of this specification.

Bid Documentation

The term "bid documentation" as used in this specification means all writings, working papers, computer printouts, charts, and all other data compilations which contain or reflect information, data, and calculations used by the Contractor to determine the bid in bidding for this project. The term "bid documentation" includes, but is not limited to, Contractor equipment rates, Contractor overhead rates, labor rates, efficiency or productivity factors, arithmetic extensions, and quotations from subcontractors and material suppliers to the extent that such rates and quotations were used by the Contractor in formulating and determining the amount of the bid. The term "bid documentation" also includes any manuals which are standard to the industry used by the Contractor in determining the bid for this project. Such manuals may be included in the bid documentation by reference. Such reference shall include the name and date of the Publication and the Publisher. The term does not include bid documents provided by the Department for use by the Contractor in bidding on this project.

Submittal of Bid Documentation

The Contractor shall submit the bid documentation to the Department in a container suitable for sealing, no later than ten calendar days following award of the Contract by the Department. The Department will not issue a Notice to Proceed until the acceptable documentation has been received. The container shall be clearly marked “Bid Documentation" and shall also show on the face of the container the Contractor's name, the date of submittal, the Project Number, the P.I. Number, the Contract Number, and the County.

Affidavit

In addition to the bid documentation, an affidavit, signed under oath by an individual authorized by the Contractor to execute bidding proposals shall be included. The affidavit shall list each bid document with sufficient specificity so a comparison may be made between the list and the bid documentation to ensure that all of the bid documentation listed in the affidavit has been enclosed. The affidavit shall attest that the affiant has personally examined the bid documentation, that the affidavit lists all of the documents used by the Contractor to determine the bid for this project, and that all such bid documentation has been included.

Verification

Upon receipt of the bid documentation authorized representatives of the Department and the Contractor will verify the accuracy and completeness of the bid documentation compared to the affidavit. Should a discrepancy exist the

Contractor shall immediately furnish the Department with any other needed total documentation. The Department, upon determining that the bid documentation is complete, will, in the presence of the Contractor's representative, immediately place the complete documentation and affidavit in the container and seal it. Both parties will deliver the sealed container to a banking institution or other bonded document storage facility selected by the Department for placement in a safety deposit box, vault or other secure accommodation.

Duration and Use

The bid documentation and affidavit shall remain in escrow during the life of the Contract or until such time as the Contractor notifies the Department of his intention to file a claim or his initiation of litigation against the Department related to the Contract. Notification of the Contractor's intention to file a claim or litigation against the Department shall be sufficient evidence for the Department to obtain the release and custody of the bid documentation. If no such notification is received and the Contractor has signed the final Standard Release Form the Department shall instruct the banking institution or other bonded document storage facility to release the sealed container to the Contractor.

The Contractor agrees that the sealed container placed in escrow contains all of the bid documentation used to determine the bid and that no other bid documentation shall be utilized by the Contractor in litigation over claims brought by the Contractor arising out of this contract.

Refusal or Failure to Provide Bid Documentation

Failure or refusal to provide bid documentation shall be deemed either:

1. Failure to execute the Contract if the Contract has not yet been executed or,
2. Material breach of the Contract if the Contract has been executed.

Should the Contractor fail to execute the Contract as stated in 1 above, the Department will retain the bid bond. Refusal of the Contractor to provide adequate documentation after execution of the Contract will be considered material breach of the Contract and the Contractor will be declared in default of the Contract. The Department may, at its option terminate the contract for default. These remedies are not exclusive and the Department may take such other action as is available to it under the law.

Confidentiality of Bid Documentation

The bid documentation and affidavit in escrow are, and will remain, the property of the Contractor. The Department has no interest in, or right to, the bid documentation and affidavit other than to verify the contents and legibility of the bid documentation unless notification of the intention to file claim is received or litigation ensues between the Department and Contractor. In the event of such notification or litigation, the bid documentation and affidavit shall become the property of the Department.

Cost and Escrow Instructions

The cost of the escrow will be borne by the Department. The Department will provide escrow instructions to the banking institution or other bonded document storage facility consistent with this specification.

Escrow Agreement

A copy of the Escrow Agreement the successful bidder will be required to sign is attached. The successful bidder (contractor) agrees that they will sign the Escrow Agreement. Should the Contractor fail to sign the Escrow Agreement, when presented, the Department will retain the bid bond. If the Contract has been executed, and the Contractor fails to sign the Escrow Agreement, the Contractor may be declared in default of the Contract.

Payment

There will be no separate payment for compilation of the data, container or cost of verification of the bid documentation. All costs shall be included in the overall Contract bid price.

Escrow Agreement
For
Bid Documents

THIS AGREEMENT is made and entered into this _____ day of_____, 20____, by and among the Department of Transportation, an agency of the State of Georgia, hereinafter called the "DEPARTMENT";_____; hereinafter called the "CONTRACTOR"; and _____, hereinafter called the "ESCROW AGENT".

WHEREAS, the DEPARTMENT awarded a project on _____, 20__, based on a bid proposal submitted by the CONTRACTOR, hereinafter called the "PROPOSAL", for the construction of Project Number _____County(ies), Georgia, hereinafter called the "PROJECT", pursuant to which the CONTRACTOR shall cause the work therein to be constructed; and

WHEREAS, the DEPARTMENT and CONTRACTOR are desirous of entering into an Escrow Agreement, to provide for specific contingencies governing the escrow and control of the PROPOSAL bid documentation; hereinafter called "BID DOCUMENTS"; and

WHEREAS, the DEPARTMENT and CONTRACTOR desire the ESCROW AGENT to hold the BID DOCUMENTS of the CONTRACTOR;

NOW THEREFORE, for and in consideration of the mutual covenants contained herein, it is agreed by and between the parties hereto that:

ARTICLE I
ESCROW BID DOCUMENTATION

The parties hereto agree to the establishment of Escrow of the BID DOCUMENTS for the PROPOSAL pursuant to the Specifications, Supplemental Specifications, or Special Provisions pertaining to construction under the contract. It is the understanding of the parties hereto that the DEPARTMENT shall pay the ESCROW AGENT, as determined by separate agreement, for the escrow of the BID DOCUMENTS submitted to the ESCROW AGENT under the terms of this Agreement.

ARTICLE II

ACKNOWLEDGMENT

By its signature below, the ESCROW AGENT hereby acknowledges receipt from the DEPARTMENT and CONTRACTOR of a sealed container bearing the CONTRACTOR'S name, address and PROJECT Number assigned by the DEPARTMENT and containing, as specified by the affidavit of the CONTRACTOR, the PROPOSAL BID DOCUMENTS for the aforementioned PROJECT.

ARTICLE III
DEPOSIT OF BID DOCUMENTS

The PROPOSAL BID DOCUMENTS shall remain on deposit with the ESCROW AGENT until those conditions of release, as specified in ARTICLE IV, RELEASE FROM ESCROW, are met. As long as the BID DOCUMENTS remain in escrow with the ESCROW AGENT, the ESCROW AGENT shall not allow any person access, to gain possession, or to in any way interfere with the sealed BID DOCUMENT container.

ARTICLE IV
RELEASE FROM ESCROW

Upon being presented, by the DEPARTMENT, with a CONTRACTOR signed final Standard Release Form for the contract for the PROJECT, the ESCROW AGENT shall deliver to the CONTRACTOR the sealed container bearing the CONTRACTOR'S name and address and project number on it. The ESCROW AGENT is also authorized to release the BID DOCUMENT sealed container to the DEPARTMENT without the CONTRACTOR'S signed consent subject to the following conditions:

1. The CONTRACTOR has provided written notification to the DEPARTMENT of the CONTRACTOR'S intention to file a claim related to the contract for the PROJECT; or

2. The CONTRACTOR has initiated litigation against the DEPARTMENT relating to the contract for the PROJECT.

Prior to any release from escrow to the DEPARTMENT the ESCROW AGENT shall verify that either condition of release to the DEPARTMENT, as stated above, has been met by providing written notice to the CONTRACTOR of the ESCROW AGENT'S intention to release the PROPOSAL BID DOCUMENTS to the DEPARTMENT. Such written notice from the ESCROW AGENT shall be sent by certified mail no less than ten (10) calendar days prior to release to the DEPARTMENT. Upon any release from escrow of the PROPOSAL BID DOCUMENT container the ESCROW AGENT shall cause the execution of Exhibit A, Escrow Release for

PROPOSAL BID DOCUMENTS, as attached hereto and incorporated herein as if fully contained, by the party receiving the BID DOCUMENT container.

ARTICLE V
INDEMNITY

The CONTRACTOR agrees to indemnify and hold the ESCROW AGENT harmless against any loss, claim, damage, liability or expenses incurred in connection with any action, suit, proceeding, claim or alleged liability arising from this Escrow Agreement, provided, however, that the ESCROW AGENT shall not be so indemnified or held harmless for its negligence or acts of bad faith by it or any of its agents or employees.

ARTICLE VI
NOTICES

All notices and other communication shall be in writing and shall be deemed to have been duly given and delivered if mailed by certified mail, return receipt requested, postage prepaid to the addresses stated herein:

DEPARTMENT:

Georgia Department of Transportation

ATTN: Treasurer

600 West Peachtree Street

Atlanta, Georgia 30308

CONTRACTOR:

ESCROW AGENT:

ARTICLE VII
DUTIES OF ESCROW AGENT

The duties and responsibilities of the ESCROW AGENT shall be limited to those expressly set forth herein and the ESCROW AGENT shall act only in accordance with this ESCROW Agreement.

Notwithstanding specific provisions hereunder, the ESCROW AGENT shall at all times act upon and in accordance with the joint written instructions of the DEPARTMENT and CONTRACTOR.

ARTICLE VIII.
LAWS

This Escrow Agreement shall be deemed to have been executed in Fulton County, Georgia and the laws of the State of Georgia shall apply.

ARTICLE IX
ASSIGNMENT

This Escrow Agreement shall not be assigned without the written consent of all the parties hereto.

ARTICLE X
SURVIVAL OF CONTRACT

Except as may be expressly modified, all terms and conditions of this Escrow Agreement remain in full force and effect. The establishment of this Escrow Agreement is limited solely by the contingency of release of the PROPOSAL BID DOCUMENTS by the CONTRACTOR to the DEPARTMENT, as established by Article IV, Release From Escrow. Nothing contained herein shall alter the rights of the parties hereto.

The covenants herein contained shall, except as otherwise provided, accrue to the benefit of and be binding upon the successors and assigns of the parties hereto.

IN WITNESS WHEREOF, the parties hereunto set their hands and seals the day above first written.

CONTRACTOR:

BY:

_____ (SEAL)

TITLE:

_____

WITNESS

ESCROW AGENT:

BY:

_____ (SEAL)

TITLE:

_____

WITNESS

DEPARTMENT OF TRANSPORTATION

BY:

_____

TITLE: STATE TRANSPORTATION OFFICE ENGINEER

_____

WITNESS

ESCROW CONTAINER SEAL NUMBERS:

Exhibit A

ESCROW RELEASE
OF
BID DOCUMENTS

This is to certify that on this _____day of _____, 20__, the sealed container identified as:

"Bid Documentation"

CONTRACTOR:

PROJECT NUMBER:

P.I. NUMBER:

CONTRACT NUMBER:

DATE OF SUBMITTAL:

(Evidence by Agreement dated _____).

was released from escrow and personally handed to the below named individual acknowledging receipt, representing the CONTRACTOR/DEPARTMENT, by the ESCROW AGENT upon the presentation of the required documentation pursuant to Article IV, Release from Escrow, of the agreement dated_____, 20_, a copy of such documentation is attached hereto.

Acknowledgment of Receipt:

_____

Acknowledgment of Release:

_____

ESCROW AGENT

ESCROW CONTAINER SEAL NUMBERS:

AFFIDAVIT

STATE OF GEORGIA

COUNTY OF FULTON

COMES NOW _____(Name)_____, _____(Title)_____ of _____(Company Name)_____who, after having been duly sworn, on oath, state and depose as follows:

1.

This Affidavit is based upon the personal knowledge of the Affiant.

2.

_____(Company Name)_____submitted a bid on Georgia Department of Transportation Project _____, _____ COUNTY(IES) which bid was the low, responsive bid, and a Contract has been entered into between ____(Company Name)____and the Georgia Department of Transportation, known as Contract No. B_____.

3.

This Affidavit is given in compliance with the special provision entitled "ESCROW BID DOCUMENTATION" forming part of the Contract Documents of Contract No. B-_____.

4.

The Affiant attests that, in his capacity for_____(Company Name)_____, he is personally aware the "Bid Documentation" which was used by the Company in determining, formulating, and submitting the bid on Project No._____, _____COUNTY(IES).

5.

The Affiant further states that he has examined the bid documentation which has been placed in a sealed container marked "Bid Documentation", and that all such Bid Documentation utilized by the Company in determining, formulating, and submitting its bid is contained in the sealed container so marked.

6.

Each bid document contained in the sealed container is separately listed on Exhibit A, which is attached hereto and incorporated herein as fully as if included in this Affidavit at this paragraph 6.

Further Affiant sayeth not.

_____(Company Name)_____

By: _____

_____(Name)_____

Its: _____(Title)_____

Sworn to and subscribed before me this _____ day of _____, 20_____.

_____

NOTARY PUBLIC

My Commission expires:_____

First Use Date 2001 Specifications: November 1, 2002
Revised: August 28, 2008

DEPARTMENT OF TRANSPORTATION
STATE OF GEORGIA

SPECIAL PROVISION

Add the following:

ESCROW BID DOCUMENTATION

Scope and Purpose

The purpose of this specification is to preserve the bid documents of the successful bidder (Contractor) for use by the parties in any claims or litigation between the Department and Contractor arising out of this contract.

The Contractor shall submit a legible copy of bid documentation used to prepare the bid for this contract to the Department. Such documentation shall be placed in escrow with a banking institution or other bonded document storage facility and preserved by that institution/facility as specified in the following sections of this specification.

Bid Documentation

The term "bid documentation" as used in this specification means all writings, working papers, computer printouts, charts, and all other data compilations which contain or reflect information, data, and calculations used by the Contractor to determine the bid in bidding for this project. The term "bid documentation" includes, but is not limited to, Contractor equipment rates, Contractor overhead rates, labor rates, efficiency or productivity factors, arithmetic extensions, and quotations from subcontractors and material suppliers to the extent that such rates and quotations were used by the Contractor in formulating and determining the amount of the bid. The term "bid documentation" also includes any manuals which are standard to the industry used by the Contractor in determining the bid for this project. Such manuals may be included in the bid documentation by reference. Such reference shall include the name and date of the Publication and the Publisher. The term does not include bid documents provided by the Department for use by the Contractor in bidding on this project.

Submittal of Bid Documentation

The Contractor shall submit the bid documentation to the Department in a container suitable for sealing, no later than ten calendar days following award of the Contract by the Department. The Department will not issue a Notice to Proceed until the acceptable documentation has been received. The container shall be clearly marked “Bid Documentation" and shall also show on the face of the container the Contractor's name, the date of submittal, the Project Number, the P.I. Number, the Contract Number, and the County.

Affidavit

In addition to the bid documentation, an affidavit, signed under oath by an individual authorized by the Contractor to execute bidding proposals shall be included. The affidavit shall list each bid document with sufficient specificity so a comparison may be made between the list and the bid documentation to ensure that all of the bid documentation listed in the affidavit has been enclosed. The affidavit shall attest that the affiant has personally examined the bid documentation, that the affidavit lists all of the documents used by the Contractor to determine the bid for this project, and that all such bid documentation has been included.

Verification

Upon receipt of the bid documentation authorized representatives of the Department and the Contractor will verify the accuracy and completeness of the bid documentation compared to the affidavit. Should a discrepancy exist the

Contractor shall immediately furnish the Department with any other needed total documentation. The Department, upon determining that the bid documentation is complete, will, in the presence of the Contractor's representative, immediately place the complete documentation and affidavit in the container and seal it. Both parties will deliver the sealed container to a banking institution or other bonded document storage facility selected by the Department for placement in a safety deposit box, vault or other secure accommodation.

Duration and Use

The bid documentation and affidavit shall remain in escrow during the life of the Contract or until such time as the Contractor notifies the Department of his intention to file a claim or his initiation of litigation against the Department related to the Contract. Notification of the Contractor's intention to file a claim or litigation against the Department shall be sufficient evidence for the Department to obtain the release and custody of the bid documentation. If no such notification is received and the Contractor has signed the final Standard Release Form the Department shall instruct the banking institution or other bonded document storage facility to release the sealed container to the Contractor.

The Contractor agrees that the sealed container placed in escrow contains all of the bid documentation used to determine the bid and that no other bid documentation shall be utilized by the Contractor in litigation over claims brought by the Contractor arising out of this contract.

Refusal or Failure to Provide Bid Documentation

Failure or refusal to provide bid documentation shall be deemed either:

1. Failure to execute the Contract if the Contract has not yet been executed or,
2. Material breach of the Contract if the Contract has been executed.

Should the Contractor fail to execute the Contract as stated in 1 above, the Department will retain the bid bond. Refusal of the Contractor to provide adequate documentation after execution of the Contract will be considered material breach of the Contract and the Contractor will be declared in default of the Contract. The Department may, at its option terminate the contract for default. These remedies are not exclusive and the Department may take such other action as is available to it under the law.

Confidentiality of Bid Documentation

The bid documentation and affidavit in escrow are, and will remain, the property of the Contractor. The Department has no interest in, or right to, the bid documentation and affidavit other than to verify the contents and legibility of the bid documentation unless notification of the intention to file claim is received or litigation ensues between the Department and Contractor. In the event of such notification or litigation, the bid documentation and affidavit shall become the property of the Department.

Cost and Escrow Instructions

The cost of the escrow will be borne by the Department. The Department will provide escrow instructions to the banking institution or other bonded document storage facility consistent with this specification.

Escrow Agreement

A copy of the Escrow Agreement the successful bidder will be required to sign is attached. The successful bidder (contractor) agrees that they will sign the Escrow Agreement. Should the Contractor fail to sign the Escrow Agreement, when presented, the Department will retain the bid bond. If the Contract has been executed, and the Contractor fails to sign the Escrow Agreement, the Contractor may be declared in default of the Contract.

Payment

There will be no separate payment for compilation of the data, container or cost of verification of the bid documentation. All costs shall be included in the overall Contract bid price.

Escrow Agreement
For
Bid Documents

THIS AGREEMENT is made and entered into this _____ day of_____, 20____, by and among the Department of Transportation, an agency of the State of Georgia, hereinafter called the "DEPARTMENT";_____; hereinafter called the "CONTRACTOR"; and _____, hereinafter called the "ESCROW AGENT".

WHEREAS, the DEPARTMENT awarded a project on _____, 20__, based on a bid proposal submitted by the CONTRACTOR, hereinafter called the "PROPOSAL", for the construction of Project Number _____County(ies), Georgia, hereinafter called the "PROJECT", pursuant to which the CONTRACTOR shall cause the work therein to be constructed; and

WHEREAS, the DEPARTMENT and CONTRACTOR are desirous of entering into an Escrow Agreement, to provide for specific contingencies governing the escrow and control of the PROPOSAL bid documentation; hereinafter called "BID DOCUMENTS"; and

WHEREAS, the DEPARTMENT and CONTRACTOR desire the ESCROW AGENT to hold the BID DOCUMENTS of the CONTRACTOR;

NOW THEREFORE, for and in consideration of the mutual covenants contained herein, it is agreed by and between the parties hereto that:

ARTICLE I
ESCROW BID DOCUMENTATION

The parties hereto agree to the establishment of Escrow of the BID DOCUMENTS for the PROPOSAL pursuant to the Specifications, Supplemental Specifications, or Special Provisions pertaining to construction under the contract. It is the understanding of the parties hereto that the DEPARTMENT shall pay the ESCROW AGENT, as determined by separate agreement, for the escrow of the BID DOCUMENTS submitted to the ESCROW AGENT under the terms of this Agreement.

ARTICLE II

ACKNOWLEDGMENT

By its signature below, the ESCROW AGENT hereby acknowledges receipt from the DEPARTMENT and CONTRACTOR of a sealed container bearing the CONTRACTOR'S name, address and PROJECT Number assigned by the DEPARTMENT and containing, as specified by the affidavit of the CONTRACTOR, the PROPOSAL BID DOCUMENTS for the aforementioned PROJECT.

ARTICLE III
DEPOSIT OF BID DOCUMENTS

The PROPOSAL BID DOCUMENTS shall remain on deposit with the ESCROW AGENT until those conditions of release, as specified in ARTICLE IV, RELEASE FROM ESCROW, are met. As long as the BID DOCUMENTS remain in escrow with the ESCROW AGENT, the ESCROW AGENT shall not allow any person access, to gain possession, or to in any way interfere with the sealed BID DOCUMENT container.

ARTICLE IV
RELEASE FROM ESCROW

Upon being presented, by the DEPARTMENT, with a CONTRACTOR signed final Standard Release Form for the contract for the PROJECT, the ESCROW AGENT shall deliver to the CONTRACTOR the sealed container bearing the CONTRACTOR'S name and address and project number on it. The ESCROW AGENT is also authorized to release the BID DOCUMENT sealed container to the DEPARTMENT without the CONTRACTOR'S signed consent subject to the following conditions:

1. The CONTRACTOR has provided written notification to the DEPARTMENT of the CONTRACTOR'S intention to file a claim related to the contract for the PROJECT; or

2. The CONTRACTOR has initiated litigation against the DEPARTMENT relating to the contract for the PROJECT.

Prior to any release from escrow to the DEPARTMENT the ESCROW AGENT shall verify that either condition of release to the DEPARTMENT, as stated above, has been met by providing written notice to the CONTRACTOR of the ESCROW AGENT'S intention to release the PROPOSAL BID DOCUMENTS to the DEPARTMENT. Such written notice from the ESCROW AGENT shall be sent by certified mail no less than ten (10) calendar days prior to release to the DEPARTMENT. Upon any release from escrow of the PROPOSAL BID DOCUMENT container the ESCROW AGENT shall cause the execution of Exhibit A, Escrow Release for

PROPOSAL BID DOCUMENTS, as attached hereto and incorporated herein as if fully contained, by the party receiving the BID DOCUMENT container.

ARTICLE V
INDEMNITY

The CONTRACTOR agrees to indemnify and hold the ESCROW AGENT harmless against any loss, claim, damage, liability or expenses incurred in connection with any action, suit, proceeding, claim or alleged liability arising from this Escrow Agreement, provided, however, that the ESCROW AGENT shall not be so indemnified or held harmless for its negligence or acts of bad faith by it or any of its agents or employees.

ARTICLE VI
NOTICES

All notices and other communication shall be in writing and shall be deemed to have been duly given and delivered if mailed by certified mail, return receipt requested, postage prepaid to the addresses stated herein:

DEPARTMENT:

Georgia Department of Transportation

ATTN: Treasurer

600 West Peachtree Street

Atlanta, Georgia 30308

CONTRACTOR:

ESCROW AGENT:

ARTICLE VII
DUTIES OF ESCROW AGENT

The duties and responsibilities of the ESCROW AGENT shall be limited to those expressly set forth herein and the ESCROW AGENT shall act only in accordance with this ESCROW Agreement.

Notwithstanding specific provisions hereunder, the ESCROW AGENT shall at all times act upon and in accordance with the joint written instructions of the DEPARTMENT and CONTRACTOR.

ARTICLE VIII.
LAWS

This Escrow Agreement shall be deemed to have been executed in Fulton County, Georgia and the laws of the State of Georgia shall apply.

ARTICLE IX
ASSIGNMENT

This Escrow Agreement shall not be assigned without the written consent of all the parties hereto.

ARTICLE X
SURVIVAL OF CONTRACT

Except as may be expressly modified, all terms and conditions of this Escrow Agreement remain in full force and effect. The establishment of this Escrow Agreement is limited solely by the contingency of release of the PROPOSAL BID DOCUMENTS by the CONTRACTOR to the DEPARTMENT, as established by Article IV, Release From Escrow. Nothing contained herein shall alter the rights of the parties hereto.

The covenants herein contained shall, except as otherwise provided, accrue to the benefit of and be binding upon the successors and assigns of the parties hereto.

IN WITNESS WHEREOF, the parties hereunto set their hands and seals the day above first written.

CONTRACTOR:

BY:

_____ (SEAL)

TITLE:

_____
WITNESS

ESCROW AGENT:

BY:

_____ (SEAL)

TITLE:

_____
WITNESS

DEPARTMENT OF TRANSPORTATION

BY:

_____

TITLE: STATE TRANSPORTATION OFFICE ENGINEER

_____
WITNESS

ESCROW CONTAINER SEAL NUMBERS:

Exhibit A

ESCROW RELEASE
OF
BID DOCUMENTS

This is to certify that on this _____day of _____, 20__, the sealed container identified as:

"Bid Documentation"

CONTRACTOR:

PROJECT NUMBER:

P.I. NUMBER:

CONTRACT NUMBER:

DATE OF SUBMITTAL:

(Evidence by Agreement dated _____).

was released from escrow and personally handed to the below named individual acknowledging receipt, representing the CONTRACTOR/DEPARTMENT, by the ESCROW AGENT upon the presentation of the required documentation pursuant to Article IV, Release from Escrow, of the agreement dated_____, 20_, a copy of such documentation is attached hereto.

Acknowledgment of Receipt:

_____

Acknowledgment of Release:

_____

ESCROW AGENT

ESCROW CONTAINER SEAL NUMBERS:

AFFIDAVIT

STATE OF GEORGIA

COUNTY OF FULTON

COMES NOW _____(Name)_____, _____(Title)_____ of _____(Company Name)_____who, after having been duly sworn, on oath, state and depose as follows:

1.

This Affidavit is based upon the personal knowledge of the Affiant.

2.

_____(Company Name)_____submitted a bid on Georgia Department of Transportation Project _____, _____ COUNTY(IES) which bid was the low, responsive bid, and a Contract has been entered into between ____(Company Name)____and the Georgia Department of Transportation, known as Contract No. B_____.

3.

This Affidavit is given in compliance with the special provision entitled "ESCROW BID DOCUMENTATION" forming part of the Contract Documents of Contract No. B-_____.

4.

The Affiant attests that, in his capacity for_____(Company Name)_____, he is personally aware the "Bid Documentation" which was used by the Company in determining, formulating, and submitting the bid on Project No._____, _____COUNTY(IES).

5.

The Affiant further states that he has examined the bid documentation which has been placed in a sealed container marked "Bid Documentation", and that all such Bid Documentation utilized by the Company in determining, formulating, and submitting its bid is contained in the sealed container so marked.

6.

Each bid document contained in the sealed container is separately listed on Exhibit A, which is attached hereto and incorporated herein as fully as if included in this Affidavit at this paragraph 6.

Further Affiant sayeth not.

_____(Company Name)_____

By: _____

_____(Name)_____

Its: _____(Title)_____

Sworn to and subscribed before me this _____ day of _____, 20_____.

_____

NOTARY PUBLIC

My Commission expires:_____

Date: May 29, 2001
First Use Date 2001 Specifications: November 1, 2002
Revised: July 28, 2009

DEPARTMENT OF TRANSPORTATION
STATE OF GEORGIA

SPECIAL PROVISION

Section 103—Award and Execution of Contract
(50 Day Clause)

Delete paragraph one of Subsection 103.02 and substitute the following:

If a Contract is Awarded, it will be Awarded to the lowest reliable bidder whose Proposal shall have met all the prescribed requirements. The Contract will be Awarded, if at all, within 50 calendar days after the opening of the Proposals, unless a longer period is specified in the Proposal or the successful Bidder agrees in writing a longer period for the Award.

Georgia Department of Transportation
State of Georgia
Special Provision

Project: CSMSL-0009-00(690)
County: Chatham
P.I. NO. 0008690

Section 105 - Control of Work

Delete Section 105.04 and Substitute the following:

105.04 Coordination of Plans, Specifications, Supplemental Specifications, and Special Provisions

The *Standard Specifications*, the Supplemental Specifications, the Plans, Special Provisions, and all supplementary documents are essential parts of the Contract, and a requirement occurring in one is as binding as though occurring in all. They are intended to be complementary and to describe and provide for a complete work.

In cases of discrepancy, the governing descending order will be as follows:

1. Special Provision Section 999- Design - Build

2. Special Provisions

3. Project Plans including Special Plan Details

4. Supplemental Specifications

5. Standard Plans including Standard Construction Details

6. Standard Specifications

Calculated dimensions will govern over scaled dimensions.

The Contractor shall take no advantage of any apparent error or omission in the Plans or Specifications. In the event the Contractor discovers such an error or omission, he shall immediately notify the Engineer. The Engineer will then make such corrections and interpretations as may be deemed necessary for fulfilling the intent of the Plans and Specifications.

A. Specifications of Other Organizations

When work is specified to be done or when materials are to be furnished according to the published specifications of organizations other than the Department, the latest specifications published by those organizations at the time bids are received shall apply unless otherwise specified.

AASHTO Interim Specifications and ASTM Tentative Specifications will be considered effective on date of issue.

B. Item Numbers

The first three digits of any Item Number in the itemized Proposal designates the Specification section under which the Item shall be constructed.

Date: April 19, 2011
Revised: August 2, 2011

DEPARTMENT OF TRANSPORTATION

STATE OF GEORGIA

SPECIAL PROVISION
PROJECT: CSMSL-0008-00(690), Chatham County, PI # 0008690

Section 107 – Legal Regulations and Responsibility to the Public

---

Add the following to Subsection 107.23:

G. Protection of Federally Protected Environmentally Sensitive Species

The following conditions are intended as a minimum to protect this species and its habitat during any activities that are in close proximity to the known location(s) of these species.

1. The Contractor shall advise all project personnel employed to work on this project about the potential presence and appearance of migratory birds and wood storks (*Mycteria americana*) and that there are civil and criminal penalties for harming, harassing, or killing these species which are protected under the Migratory Bird Treaty Act of 1918 and the Endangered Species Act of 1973, respectively. Pictures and habitat information will be provided to the Contractor at the preconstruction conference.

2. All construction activities shall cease upon the sighting of a wood stork within 100 yards of the project area. Construction activities shall not resume until the wood stork has departed from the project area on its own accord and has not been observed within 100 yards of the project area for at least 30 minutes. The wood stork shall not be disturbed or harassed.

3. In the event any incident occurs that causes harm to migratory passerine bird species and/or wood storks, the Contractor shall report the incident immediately to the Project Engineer who in turn will notify the State Environmental Administrator, Georgia Department of Transportation, Office of Environmental Services (404) 631-1101.

   In addition, in the event of possible harm to migratory passerine bird species and/or wood storks, all activities causing said harm shall cease pending consultation by the Department with the U. S. Fish and Wildlife Service and the lead Federal Agency.

4. Following project completion, a report summarizing any incidents with migratory bird species and/or wood storks, shall be submitted by the Contractor to the:
   a. Project Engineer;
   b. U.S. Fish and Wildlife Service, Coastal Environmental Services Office, 4980 Wildlife Drive, NE, Townsend, GA 31331.
   c. Federal Highway Administration, 61 Forsyth Street, S.W., Suite 17T100, Atlanta, GA 30303; Nongame/Endangered Wildlife Program:
   d. Georgia Department of Natural Resources, 115 Rum Creek Dr, Forsyth, GA 31029 and
   e. Georgia Department of Transportation, Office of Environmental Services, 600 West Peachtree Street NW, Atlanta, GA 30308.

5. All costs pertaining to any requirement contained herein shall be included in the overall bid submitted unless such requirement is designated as a separate Pay Item in the Proposal.

Date: May 29, 2001
First Use Date 2001 Specifications: November 1, 2002

DEPARTMENT OF TRANSPORTATION
STATE OF GEORGIA

SPECIAL PROVISION

Section 108—Prosecution and Progress
(Federal Aid Projects)

Delete Subsection 108.06 and substitute the following:

The Engineer has the authority to suspend the Work wholly or in part, for as long as he may deem necessary, because of unsuitable weather, or other conditions considered unfavorable for continuing the Work, or for as long as he may deem necessary by reason of failure of the Contractor to carry out orders given, or to comply with any provisions of the Contract. If the performance of all or any portion of the Work is suspended or delayed by the Engineer, in writing, for an unreasonable period of time (not originally anticipated, customary, or inherent to the construction industry) and the Contractor believes that additional compensation and/or contract time is due as a result of such suspension or delay, the Contractor shall submit to the Engineer, in writing, a request for adjustment within 7 calendar days of receipt of the notice to resume work. The request shall set forth the reasons and support for such adjustment.

Upon receipt, the Engineer will evaluate the Contractor's request. If the Engineer agrees that the cost and/or time required for the performance of the Contract has increased as a result of such suspension and the suspension was caused by conditions beyond the control of, and not the fault of, the Contractor, its suppliers, or subcontractors at any approved tier, and not caused by weather, the Engineer will make an adjustment (excluding profit) and modify the Contract in writing accordingly. The Engineer will notify the Contractor of his/her determination whether or not an adjustment of the Contract is warranted.

No contract adjustment will be allowed unless the Contractor has submitted the request for adjustment within the time prescribed.

No contract adjustment will be allowed under this clause to the extent that performance would have been suspended or delayed by any other cause, or for which an adjustment is provided for or excluded under any other term or condition of this Contract.

DEPARTMENT OF TRANSPORTATION
STATE OF GEORGIA

SPECIAL PROVISION

PROJECT: CSMSL-0008-00(690)
COUNTY: Chatham
P.I. NO: 008690

SECTION 108 – PROSECUTION AND PROGRESS

Add the following to Sub-Section 108.07

108.07. H: Determination of off peak consumption season

Southern Natural Gas Company will be able to isolate, depressurize and relocate their facilities on the 30" Elba Island Regulator Lines from Station 5109+00 (Ramp 3A) to Station 6105+00 (Ramp 3C) between the days of April 15 and May 31 and between October 1st and October 31. The 14" Wrens-Savannah Line from Station 263+00 (Jimmy Deloach Connector) to Station 6042+00 (Jimmy Deloach Connector Southbound) will have to remain in service at all times during the relocation. The contractor shall coordinate all work in the area of the transmission lines with Southern Natural Gas Company.

Southern Natural Gas Company shall have the right to reasonably modify the above dates as Operation or Gas Control schedules dictate or change

DEPARTMENT OF TRANSPORTATION
STATE OF GEORGIA

SPECIAL PROVISION
Project No. 0008690
Chatham County

Section 108 – Prosecution and Progress

Add the following to Subsection 108.08:

C. For this project, an overall completion date has been established. In order to minimize the disruption of normal traffic flow, separate completion times are specified for those portions of the work requiring closing of lanes or detours as specified in Subsection 150.11.

1. Lane Closures
   Failure to maintain or reopen lanes as specified in Section 150.11.A, 150.11.B, 150.11.C, 150.11.D, or 150.11.E will result in the assessment of Liquidated Damages at a rate of $1,000.00 per hour or any part thereof.

2. Utility Conflict Matrix
   Failure to submit to the Department a Utility Conflict Matrix in the Department's prescribed format within 120 days of Notice to Proceed shall result in assessment of liquidated damages in rate of $1,000.00 per calendar day until the matrix has been received.

3. Preliminary Utility Status Report
   Failure to submit to the Department a Preliminary Utility Status Report within 180 days after the Notice to Proceed has been given for the contract shall result in assessment of liquidated damages in rate of $1,000.00 per calendar day until the report has been received.

These rates are cumulative and in addition to Liquidated Damages that may be assessed in accordance with Subsection 108.08 for failure to complete the overall project.

Georgia Department of Transportation
State of Georgia

SPECIAL PROVISION

PROJECT: CSMSL-0008-00(690)

P.I. NO. 0008690

CHATHAM COUNTY

Section 109—Measurement and Payment

Delete Subsection 109.11 and substitute the following:

109.11 Price Adjustments

A. For Road Construction:

1. Asphalt Cement Price Adjustments will be computed on a ***monthly*** basis in accordance with the following:

PA = Price Adjustment.
APM= the "Monthly Asphalt Cement Price (Georgia Base Asphalt Price)" for the month the hot mix asphalt/bituminous tack/bituminous surface treatment is placed.
APL = the "Monthly Asphalt Cement Price (Georgia Base Asphalt Price)" for the month which the project was let.
TMT = Total Monthly Tonnage of asphalt cement computed by the Engineer based on the Hot Mix Asphaltic Concrete of the various types per ton (megagram)//Total Monthly Tonnage of asphalt cement used for bituminous tack coat (asphalt cement tack coat only, emulsified bituminous materials for tack coat are excluded) converted from gallons to tons (megagrams) by the Engineer//Total Monthly Tonnage of asphalt cement used for bituminous surface treatment (total gallons of asphalt emulsion used, as measured from distributors, will be multiplied by a factor of 0.65 to determine the quantity in gallons of asphalt cement used) converted from gallons to tons (megagrams) by the Engineer and certified for payment.

a. If the asphalt cement price for the month is *greater* than the asphalt cement price for the month in which the project was let to contract, the contractor will be paid an amount calculated in accordance with the following formula:

PA = [((APM-APL)/APL) - 0.05] x TMT x APL

b. If the asphalt cement price for the month is *less* than the asphalt cement price for the month in which the project was let to contract, the Department will deduct an amount calculated in accordance with the following formula:

PA = [((APM-APL)/APL) + 0.05] x TMT x APL

1. **"Monthly Asphalt Cement Price":** The Department will determine the "Monthly Asphalt Cement Price" based on the following formulas:

Monthly Asphalt Cement Price = 100% Georgia Base Asphalt Price;

Where;

GBAP = "Georgia Base Asphalt Price", (in dollars/ton) is based on the arithmetic average posted price of PG asphalt cement as specified in Section 820, from the Department's monthly survey obtained from approved asphalt cement suppliers of bituminous materials to the Department projects F.O.B. the suppliers terminal. However, the highest price and the lowest price are excluded from the calculation of price, GBAP.

2. **"Asphalt Cement Quantity Calculation":** The calculation of asphalt cement quantity for each mix type will be based on the asphalt cement content (***AC %***) of the approved Job Mix Formula (JMF) as specified in Subsection 400.1.03.C. The following calculation formula will be used to determine asphalt cement quantity:

   Asphalt Cement Quantity = Hot Mix Asphaltic Concrete monthly total in tons (megagrams) per mix type certified for the payment x ***AC (%)***

   The Total Monthly Tonnage (TMT) of asphalt cement computed by the Engineer will be calculated as follows:

   TMT = Sum of all asphalt cement quantities, including polymer modified asphalt binder and non-modified asphalt cement, based on the Hot Mix Asphaltic Concrete of the various mix types per ton (megagram)// Sum of all asphalt cement quantities used as bituminous tack coat converted from gallons to tons (megagrams)// Sum of all asphalt cement quantities used for bituminous surface treatment (total gallons of asphalt emulsion used, as measured from distributors, will be multiplied by a factor of 0.65 to determine the quantity in gallons of asphalt cement used) converted from gallons to tons (megagrams) by the Engineer certified for payment.

   Asphalt Cement Price for the Month (APM) will be adjusted monthly. Price adjustments (PA) will be made monthly and all calculations for Price Adjustments shall be performed by the Engineer as specified in SOP-39 "Determination of Asphalt Cement Index and Asphalt Cement Price Adjustment".

B. **Price Adjustment Trigger:** No price adjustment will be made on any project with less than 366 Calendar Days from the Contract Letting Date to the specified completion date. If the original Contract contains 366 Calendar Days or more, the Price Adjustment shall be made on quantities placed from the Contract Letting Date to the specified completion date. An asphalt cement price adjustment shall not be made until the APM is greater than 5% above or below the APL.

C. **"Other Restrictions":**

1. No asphalt cement price adjustment will be made for cut-back, and emulsified asphalt when used for bituminous tack coat with Hot Mix Asphaltic Concrete Construction.

2. There is a cap of 125% above the APL for any price adjustment.

3. Unless specifically provided for by Supplemental Agreement or Contract Amendment, no positive Price Adjustments for Asphalt Cement that result in a payment to the Contractor will be made after the original Contract Time has expired. Irrespective of any other provisions in the Contract, for purposes of this specification, "Contract Time" does not include any time extensions or Supplemental Agreements which affect the completion of the Contract. Negative Price Adjustments for Asphalt Cement for any work placed after the original Contract Time expires resulting in a return of funds to the Department will be made and shall be computed based on the Monthly Asphalt Cement Price at the time the Contract Time has expired or the Monthly Asphalt Cement Price at the time the Contract was let, whichever is less.

D. **Final Adjustment:** If there are differences between the final audited quantities and the sum of the quantities used to determine the asphalt cement adjustment, the Engineer will make a pro-rated increase or decrease in the price adjustment.

Payment for Asphalt Cement Price Adjustment will be made under:

Item No. 109	Price Adjustment- Asphalt Cement	$ (+/-)

DEPARTMENT OF TRANSPORTATION
STATE OF GEORGIA

SPECIAL PROVISION

PROJECT: CSMSL-0008-00(690)
CHATHAM COUNTY
P.I. NO: 0008690

SECTION 150 – TRAFFIC CONTROL

ADD the following:

150.11 SPECIAL CONDITIONS:

A. SR 307/Bourne Ave

1. The Contractor shall maintain two (2) lanes of traffic in each direction at all times.
2. The Contractor shall notify the Georgia Port Authority 7 days in advance of any change of traffic pattern.

B. Pierce Ave between SR 21/Augusta Rd and Jimmy Deloach Parkway

1. The Contractor shall maintain one (1) lane of traffic in each direction at all times, including the turn lanes at the intersection of SR 21/Augusta Road and Pierce Avenue.
2. The Contractor shall notify the Georgia Port Authority 7 days in advance of any change in traffic pattern.

C. SR 21/Augusta Rd

1. The Contractor shall not install lane closures, pace traffic or move equipment or materials at any time.
2. Shoulder closures are allowed.

D. SR 30/Bonnybridge Road and Crossgate Road

1. The contractor shall not install lane closures, pace traffic or move equipment or materials between the hours of 6:00 am to 9:00 am and between the hours of 4:00 pm to 7:00 pm, Monday thru Friday.
2. The Contractor shall notify the Georgia Port Authority 7 days in advance of lane closures.

E. Grange Road

1. The contractor shall maintain one (1) lane of traffic in each direction at all times.

DEPARTMENT OF TRANSPORTATION
STATE OF GEORGIA

SPECIAL PROVISION

PROJECT NO. CSMSL-0008-00(690)
Chatham County
P.I. No. 0008690

SECTION 208 – EMBANKMENTS

Retain Section 208 and add the following:

208.1 General Description

This work includes providing and placing lightweight embankment with galvanized fasteners, impermeable geomembrane and load distribution slabs to the lines and grades shown on the Plans. This work also includes providing manufacturer's certifications and test results of the lightweight embankment and impermeable geomembrane to be used.

208.2 Materials

F. Lightweight Embankment

Construct embankments noted on the Plans as lightweight embankment using expanded polystyrene (EPS) blocks, EPS 22, ASTM D 6817, with the following properties:

A. Maximum unit weight of 1.50 pounds per cubic foot
B. Minimum unit weight of 1.35 pounds per cubic foot
C. Minimum compressive resistance of 7.3 pounds per square inch
D. Minimum elastic modulus of 730 pounds per square inch
E. Minimum flexural strength of 40 pounds per square inch
F. Minimum compressive resistance of 16.7 pounds per square inch at 5% deformation
G. Minimum compressive resistance of 19.6 pounds per square inch at 10% deformation

Use EPS blocks that have been seasoned a minimum of 72 hours prior to shipping to the project site. Ensure that the seasoning is done in a building or other structure that protects the blocks from moisture and ultraviolet radiation, and that adequate space has been provided between the EPS blocks for ventilation. Use EPS blocks that do not deviate from a flat plane more than 0.25 inches in 10 feet on any side.

Provide galvanized, barbed metal fasteners supplied by the EPS block manufacturer.

Provide an impermeable high density polyethylene (HDPE) geomembrane with the following minimum average roll values:

A. Minimum thickness- 60 mils
B. Minimum tensile strength at yield- 125 lb per inch (ASTM D 6693)
C. Minimum tensile strength at break- 225 lb per inch (ASTM D 6693)
D. Break elongation- 700% (ASTM D 6693)
E. Yield elongation- 12% (ASTM D 6693)
F. Minimum tear resistance- 40 lb (ASTM D 1004)
G. Minimum puncture resistance- 100 lb (ASTM D 4833)
H. Minimum carbon black content- 2% (ASTM D 1603)
I. Stress crack resistance- 300 hr. (ASTM D 5397)

208.3.05 Construction

F. Lightweight Embankment

At least 30 days prior to placing lightweight embankment, submit the following information to the Engineer for review and approval:

1. Certified test results performed on the EPS blocks by an independent laboratory acceptable to the Engineer, indicating that the EPS blocks meet the properties specified herein.
2. The proposed sequence of construction and manufacturer's installation recommendations.
3. A shipping, storage and material handling procedure that ensures that the EPS blocks are not damaged in any manner.
4. Certified test results performed on the impermeable HDPE geomembrane by an independent laboratory acceptable to the Engineer, indicating that the impermeable geomembrane, including any seams, meet the properties specified herein.

Do not begin placement of the lightweight embankment until the Engineer has approved the submittal.

Follow the manufacturer or suppliers' recommendations for the handling, placing, construction sequencing and protection of the lightweight embankment and impermeable geomembrane. Prior to placing EPS blocks, complete all excavation and construct benches as indicated on the Plans. Remove any sharp-edged materials and level the foundation surface to within 1 inch in 10 feet. Place all blocks in a given layer with the longitudinal axis of all blocks parallel to each other. Ensure that the vertical joints between the adjacent ends of blocks in a given row are offset to the greatest extent practicable to joints in adjacent rows. Place each subsequent layer of blocks with the longitudinal axis perpendicular to the longitudinal axis of the blocks below that layer. Place blocks such that they are supported over their entire bearing area. Adjust underlying blocks or foundation surface if necessary to prevent rocking or unevenness of blocks.

Place EPS blocks so that all joints are no greater than approximately 0.25 inches. Install the type and number of fasteners in accordance with the manufacturer's recommendations in between each layer of blocks. Cut EPS blocks using only wire saws or hot wire cutters. Prevent blocks from being dislodged by wind by using temporary weights. Do not allow open flames, petroleum products or smoking materials to come in contact with blocks.

Do not allow any construction equipment or vehicles on top of the EPS blocks prior to covering. Replace any damaged blocks with undamaged blocks at no additional cost to the Department. Place impermeable geomembrane over the top section of the EPS blocks extending 2 feet past the outer most EPS blocks in accordance with Plan details. Field or factory seam the geomembrane in accordance with the manufacture's recommendations such that the seams provide a minimum of 85% of the minimum geomembrane tensile strength. Prior to placing the geomembrane, remove any sharp-edged materials that may puncture the geomembrane. Replace any punctured or torn geomembrane at no additional cost to the Department. Cover all EPS blocks with impermeable geomembrane, the load distribution slab and/or earth fill within 45 days of placing blocks to limit exposure to ultraviolet radiation.

Remove any damaged or unused blocks from the project site and do not place in the embankment outside of the lightweight embankment Plan limits.

208.4 Measurement

Lightweight embankment will be measured per cubic yard of material in place accepted by the Engineer. Lightweight embankment placed outside the limits shown on the Plans will not be measured for payment. The load distribution slab will be measured per cubic yard of Class A concrete including reinforcement steel. No separate measurement will be made for galvanized fasteners, impermeable geomembrane, providing manufacturer's certifications or test results, benching of existing fill or other materials, labor, supplies or equipment to complete the work.

208.5 Payment

Lightweight embankment will be paid for per cubic yard of material in place accepted by the Engineer. The load distribution slab will be paid for per cubic yard of Class A concrete including reinforcement steel under Section 500. No separate payment will be made for galvanized fasteners, impermeable geomembrane, providing manufacturer's certifications or test results, benching of existing fill or other materials, labor, supplies or equipment to complete the work. Include the cost of this work in the pay item for Lightweight Embankment.

Payment will be made under:

Item No. 208-0300 – LIGHTWEIGHT EMBANKMENT…… PER CUBIC YARD

Georgia Department of Transportation

State of Georgia

Special Provision

PROJECT NO.: CSMSL-0008-00(690), CHATHAM

P.I. NO.: 0008690

Section 500—Concrete Structures

Delete Subsection 500.1 and substitute the following:

This work consists of manufacturing and using High Performance Portland cement concrete to construct precast-prestressed concrete bridge members as shown in the plans and using normal weight Portland cement concrete to construct structures as shown in the Plans.

Add the following to Subsection 500.1.02.A:

Section 831—Admixtures

Add the following to Subsection 500.1.02.B:

AASHTO T 277

Add the following to Subsection 500.1.03.A:

High Performance Concrete Mix Designs

The Fabricator is responsible for all concrete mix designs. Ensure that concrete mixes contain enough cement to produce workability within the water-cement ratio specified in Table 1A—High Performance Concrete Mix Table, below.

Submit a mix design for approval to the Office of Materials and Research. Include the sources and actual quantity of each ingredient and laboratory results that demonstrate the ability of the design to attain both the required compressive strength and chloride permeability at 56 days.

Include laboratory compressive strength test results of at least eight test cylinders prepared and cured according to AASHTO T 126. Ensure these test cylinders are made from two or more separate batches with an equal number of cylinders made from each batch.

Also include laboratory chloride permeability test results of at least two test specimens prepared and tested according to AASHTO T 277. Ensure these test specimens are made from two or more separate batches with an equal number of specimens made from each batch.

Table 1A—High Performance Concrete Mix Table

English									
Class of Concrete	**Coarse Aggregate Size No.**	**(1) Minimum Cement Factor (lbs/yd^3)**	**Maximum Water/ Cement ratio (lbs/lbs)**	**(2) Slump Acceptance Limits (in) Lower-Upper**		**Entrained Air Acceptance Limits (%) Lower-Upper**		**(3) Minimum Compressive Strength at 56 days (psi)**	**Maximum Chloride Permeability at 56 days (Coulombs)**
"AAA HPC"	67	650	.330	2	7	3.5	6.5	Beams – As shown on the Plans Piling – 5000	Beams – 3,000 Piling – 2,000
Metric									
Class of Concrete	**Coarse Aggregate Size No.**	**(1) Minimum Cement Factor (kg/m^3)**	**Maximum Water/ Cement ratio (kg/kg)**	**(2) Slump acceptance Limits (mm) Lower-Upper**		**Entrained Air Acceptance Limits (%) Lower-Upper**		**(3) Minimum Compressive Strength at 56 days (MPa)**	**Maximum Chloride Permeability At 56 days (Coulombs)**
"AAA HPC"	67	386	.330	50	180	3.5	6.5	Beams – As shown on the Plans Piling – 35	Beams – 3,000 Piling – 2,000

1. Determine the slump acceptance after the addition of high-range water reducer.
2. Determine the minimum compressive strength at 56 days using 4 in. diameter x 8 in. high (100 mm x 200 mm) cylinders.

Add the following to Subsection 500.2 Table 3:

Fly Ash	831.2.03.A.1
Silica Fume	831.2.03.A.4

Add the following note to Subsection 500.2 Table 3:

4. Use Type I or III Portland cement in High Performance concrete. Do not use air-entraining cement.

Add the following to Subsection 500.3.04.D.4:

f. For High Performance concrete, fly ash may be used as an additive at an addition rate not to exceed 15% of the cement by weight.

Add the following to Subsection 500.3.04.D:

6. Silica Fume

   Silica Fume may be used as an additive at an addition rate not to exceed 10% of the cement by weight.

Date: June 30, 2011
(Design-Build)

Department of Transportation
State of Georgia
Special Provision
PROJECT NO.: CSMSL-0008-00(690)
P.I. NO.: 0008690
Section 500—Concrete Structures

Add the following to 500.1.03.A:

The Contractor is responsible for all concrete mix designs. Submit a mix design for approval to the Office of Materials and Research. Include the sources, actual quantity of each ingredient, design slump, design air and laboratory results that demonstrate the ability of the design to attain the required compressive strength at 28 days.

Prepare and test at least 8 cylinders according to ASTM C192 and AASHTO T22 to ensure that the demonstrated laboratory compressive strength at 28 days exceeds the minimum acceptance strength (X). Make the specimens from two or more separate batches with an equal number of cylinders made from each batch. The minimum acceptance strength is:

$$X = f'c + 500 \text{ psi } (X = f'c + 3.4 \text{ MPa})$$

Where, f'c is the required minimum compressive strength at 28 days for Class D concrete as shown in Table 1–Concrete Mix Table.

Add the following to Table 1—Concrete Mix Table:

Table 1—Concrete Mix Table

English								
Class of Concrete	(2) Coarse Aggregate Size No.	(1 & 6) Minimum Cement Factor lbs/yd^3	Max Water/ Cement Ratio lbs/lbs	(5) Slump Acceptance Limits (in) Lower - Upper		(3 & 7) Entrained Air Acceptance Limits (%) Lower - Upper		Minimum Compressive Strength at 28 days (psi)
Class D	57,67	650	0.445	2	4	3.5	7.0	4000
Metric								
Class of Concrete	(2) Coarse Aggregate Size No.	(1 & 6) Minimum Cement Factor kg/m^3	Max Water/ Cement Ratio kg/kg	(5) Slump Acceptance Limits (mm) Lower - Upper		(3 & 7) Entrained Air Acceptance Limits (%) Lower - Upper		Minimum Compressive Strength at 28 days (MPa)
Class D	57,67	386	0.445	50	100	3.5	7.0	28

Delete Subsection 500.3.04.F.1.b and add the following:

b. Class AA—Bridge substructure concrete or precast concrete as called for on the Plans

Add the following to Subsection 500.3.04.F.1:

f. Class D—Bridge superstructure concrete or as called for on the Plans

MATERIALS AND RESEARCH

DEPARTMENT OF TRANSPORTATION
STATE OF GEORGIA

SPECIAL PROVISION

PROJECT: CSMSL-0008-00(690)

COUNTY: Chatham Co.

PI NO: 0008690

Section 664 - Electric Distribution Systems

Add the following:

664.1 General Description

This Work consists of furnishing labor, tools, equipment, and other items necessary for the installation, relocation, and adjustment of overhead and underground electric distribution systems in accordance with the Project plans, Work Summary Location Reports, and Specifications. Correct all deficiencies in the Work indicated by testing, inspecting, and as directed by the Engineer.

664.1.01 Definitions

General Provisions 101 through 150

Whenever the terms “Company” or “Georgia Power Company” are used in this Special Provision and its related documents, they mean Georgia Power Company, Inc., its subsidiaries, successors and/or assigns. Whenever the term “Plan” is used in this Special Provision and related documents, this includes the Electric Distribution Relocation Plans. The term “Southern Company” is synonymous with Georgia Power Company.

The term “Distribution Engineer” means the Company’s authorized individual having the authority to give instructions pertaining to the Work. The Distribution Engineer has authority to approve or reject the Work and otherwise represent the Company. The “Distribution Engineer” is not authorized to revoke, alter, enlarge, relax, or release any requirements of the Contract, Plans, and Specifications nor will they act as an agent for the Contractor. Ensure Distribution Engineer has access to all of the Work for inspection and testing. Ensure Distribution Engineer attends Closing Conference and Final Inspection.

664.1.02 Related References

General Provisions 101 through 150

A. Standard Specifications

Section 201-Clearing and Grubbing
Section 205-Roadway Excavation
Section 207-Excavation and Backfill for Minor Structures
Section 208-Embankments
Section 209-Subgrade Construction
Section 310-Graded Aggregate Construction
Section 400-Hot Mix Asphaltic Concrete Construction
Section 441-Miscelaneous Concrete
Section 500-Concrete Structures
Section 852-Miscellaneous Steel Materials
Section 861-Piling and Round Timber

Section 863-Preservative Treatment of Timber Products

B. Related Documents

1. Southern Company Overhead Distribution Standards, current edition
2. Southern Company Underground Distribution Standards, current edition
3. National Electric Safety Code, ANSI – C2 (NESC)
   Available from the Institute of Electrical and Electronics Engineers
   http://www.ieee.org/portal/site/iportals/

For copies of Southern Company's distribution standards, please contact:

Georgia Power Company
Mr. Mark Tilden
Bin 10140
241 Ralph McGill Boulevard, NE
Atlanta, Georgia 30308-3374
404-506-4203

If there is a conflict or discrepancy between the Specifications and the Southern Company Standards or the National Electric Safety Code, perform the Work in accordance with the Southern Company Standards and National Electric Safety Code, current editions. If the Southern Company Standards and National Electric Safety Codes are revised after notice to contractors date, perform the Work specified in the Plans, Work Location Summary Reports, and Specifications using the revised standards and codes. If revisions to the Southern Company Standards and National Electric Safety Codes are dated on or after the letting date shown on the bid proposal, notify the Engineer in writing of such revisions.

664.1.03 Submittals

General Provisions 101 through 150

Refer to the Southern Company Overhead Distribution Standards and Southern Company Underground Distribution Standards, current published edition, for electric utility submittal requirements.

A. As-Built Documentation

At the completion of the Work, provide as built drawings of the in-place and accepted distribution system. Provide two sets of full size plans and electronic files in the form of a Bentley MicroStation file using the version and format the Distribution Plans were created. Provide one set of plans and electronic file to the Engineer and one set of plans and electronic file to the Distribution Engineer. Deliver as-built plans no later than 30 days after completion of the Work.

664.2 Materials

A. Overhead and Underground Electric Distribution System

Any new materials required for the construction of proposed electric facilities shown on the Plans and listed in the Work Location Summary Reports are to be provided to the Contractor by Georgia Power Company. When required by the Plans and Work Location Summary Reports, transfer all existing materials to the required locations as specified. Replace in-kind any existing material damaged during transfer.

Any other materials needed to complete the electric distribution system installation shall be transferred from the existing locations specified in the Plans. Incidental materials required to complete the Work will be supplied by the Contractor. Ensure all materials used are in conformance with the requirements and standards set forth in the Southern Company Overhead Distribution Standards and Southern Company Underground Distribution Standards, current edition. Items required for the Work but not shown in the Plans or the Work Location Summary Reports will require the review and approval by the Engineer and Distribution Engineer prior to incorporating such material into the Work. The additional items required for the Work will be addressed as specified in Section 104.03 Alteration of Plans or Character of Work.

Because Georgia Power Company is supplying materials necessary for the Work, do not request a Materials Allowance as provided for in Section 109.07 Partial Payments.

664.2.01 Delivery, Storage, and Handling

General Provisions 101 through 150

Coordinate with the Georgia Power Company representative listed below to ensure all necessary materials are available for installation as required on the Plans, including the roadway staging plans. Follow any delivery, storage and handling procedures set forth in the Southern Company Overhead Distribution Standards and Southern Company Underground Distribution Standards, current edition. Coordinate with Georgia Power Company to take delivery of required material, load required material, transport all required material to the project, and properly store the material at pre-approved locations within the project limits or at pre-approved locations off the project limits. Return or dispose of all unused and remaining material as detailed in subsection 664.3.05.H.

Document all material received from Georgia Power Company and all material returned to Georgia Power Company. The Engineer and Distribution Engineer will be present when the contractor takes delivery from Georgia Power Company and when the Contractor returns material back to Georgia Power Company. With the Contractor, the Engineer and Distribution Engineer will verify materials to ensure all material delivered are documented, verified, and acknowledged in writing by all parties. The Contractor is responsible for all materials from the time of delivery from Georgia Power Company to the return of remaining materials to Georgia Power Company or disposal.

Georgia Power Company
Mr. Mark Tilden
Bin 10140
241 Ralph McGill Boulevard, NE
Atlanta, Georgia 30308-3374
404-506-4203

664.3 Construction Requirements

664.3.01 Personnel

General Provisions 101 through 150

Ensure the construction and installation of all electric distribution facilities is performed by a subcontractor who is prequalified with Georgia Power Company and is registered with the Department. Contact the Georgia Power Company representative listed below to obtain a list of prequalified electric contractors. Electric contractors not prequalified with Georgia Power Company will not be registered and approved as a subcontractor for the Department. Ensure the distribution contractor selected for the bidding process is prequalified with Georgia Power Company.

Georgia Power Company
Mr. Mark Tilden
Bin 10140
241 Ralph McGill Boulevard, NE
Atlanta, Georgia 30308-3374
404-506-4203

664.3.02 Equipment

General Provisions 101 through 150

Ensure all equipment used is in conformance with the requirements and standards set forth in the Southern Company Overhead Distribution Standards and Southern Company Underground Distribution Standards, current edition. Obtain prior approval from the Engineer before starting Work on specialty items such as boring equipment and others of similar complexity.

664.3.03 Preparation

General Provisions 101 through 150

Follow all preparation procedures set forth in the Southern Company Overhead Distribution Standards and Southern Company Underground Distribution Standards, current edition. Perform necessary preliminary engineering, field engineering, survey, and construction staking and layout for the installation of the specified electric distribution system.

664.3.04 Fabrication

General Provisions 101 through 150

Ensure fabrication procedures and requirements conform to those set forth in Southern Company Overhead Distribution Standards and Southern Company Underground Distribution Standards, current edition. Submit shop drawings to the Engineer and Distribution Engineer for any items requiring fabrication. Obtain approval from the Engineer and Distribution Engineer prior to ordering materials.

664.3.05 Construction

Review the Plans and Work Summary Location Reports to ensure all items required for the Work are included in the price bid for each electric distribution bid item. Provide a detailed list of materials required to complete the Work to the Engineer and Distribution Engineer prior to ordering and taking delivery from Georgia Power Company. In the required detailed list of materials, identify any material required to complete the Work not shown in the Plans or in the Work Summary Location Report.

A. Permission to Enter Private Property

Comply with Section 107—Legal Regulations and Responsibility to the Public.

Through an agreement between the Department and the Company; the Contractor is given the permission to enter upon private properties found outside the project's construction limits. This permission is granted for the sole purpose of activities relating to the installation and/or adjustments of distribution facilities only and is limited to the area of existing easements obtained by the company. Such permission to enter upon private properties is temporary and such rights commence upon project award and automatically expire upon completion and project final acceptance by the Department.

In all cases where it is necessary to enter upon private property; it is the Contractors sole responsibility to minimize any disruptions to personal property in the commencement of such work thereof. Additionally, the following restrictions and requirements apply:

1. All Work is limited to the installation, relocation, or replacement of distribution facilities, including the Work necessary to restore each private property as required in number 6 of this subsection.
2. Notify the Engineer and the private property owner, and resident 72 hours before commencing Work on said private property.
3. Only vehicles and equipment required for the Work are allowed on any private property.
4. Do not store any materials, vehicles, or equipment on any private property longer than the duration required to perform the Work.
5. Do not use any private property as an on-site detour or vehicle path.
6. Immediately following any construction located on private property, restore all areas of the same parcel to a condition substantially the same as existed immediately prior to any such disturbances, including without limitation, any and all necessary repairs, and replacement of grassing, landscaping and pavement which may be removed and excavated by the Contractor. Ensure all necessary repairs are made to restore the original contours and re-establish the ground cover to control erosion.

B. Finding Existing Underground Utilities and Obstructions

Comply with Subsection 107.13 and Subsection 107.21. When unforeseen conflicts or site conditions require Plan changes, perform the Work as altered according to Subsection 104.03 and Subsection 104.04.

Follow all customer notification requirements and obtain approval from the Distribution Engineer prior to disrupting existing services required for the installation of the distribution facilities shown on the Plans and Work Summary Location Reports and for the installation of any required temporary distribution facilities.

C. Installation of Electric Distribution Systems

Follow all relevant procedures set forth in the Southern Company Overhead Distribution Standards and Southern Company Underground Distribution Standards, current published edition. Construct all temporary and proposed electric distribution facilities in accordance with the requirements set forth in the Plans, Work Location Summary Reports, and as instructed by the Distribution Engineer.

D. Excavating Trenches

Excavate trenches to the proper grade, depth, and width as follows:

1. Trench to Grade

   Ensure excavated trench bottoms are firm, free from boulders, and conform to the established grade.

   a. Backfill, according to Section 207, any part of the trench excavated below the established grade. Use Class I or Class II Soils (Section 810), and firmly compact the soil.

   b. Where the established grade of a trench is in rock, undercut the bottom of the trench by at least 6 in (150 mm), then backfill and compact according to Section 207.

      Conduct blasting operations according to Subsection 107.12.

   c. Excavate trenches under pavement to grade as follows:

      i. To remove the pavement, cut it at least 12 in (300 mm) wider than each trench edge to provide solid bearing for the pavement edges when replaced. Remove the pavement according to Section 444, except no separate payment will be made for sawed joints.

      ii. Directional bore under existing sidewalks, curbs, gutters, and pavements according to Section 615.

2. Minimum Trench Depth

   Excavate trenches to provide at least 48 in (1.2 m) cover depth from the Work to the finished pavement surface, sidewalk, grass plot, etc. unless indicated otherwise on the Plans or by the Engineer.

   If any part of a distribution facility is to be placed in or under a new embankment, finish the embankment to at least a 2 ft (600 mm) plane above the top of the proposed facility before excavating the trench.

3. Trench Width

   Excavate trenches wide enough to allow proper installation of the Work.

E. Directional Boring

This Work consists of installing various sizes of bores by directional boring through whatever materials may be encountered.

Furnish, for the Engineer's approval, a plan showing the proposed methods for the installation of the horizontal directional bore. The Engineer will review the proposed installation plan within 10 working days of receipt by the Department. No directional boring Work will be allowed until the Contractor's submitted plan is approved by the Engineer. Include the following detail in the plan, as a minimum:

1. List of projects completed by the company performing the boring operation, environment of installation (urban work, river crossing, freeway), diameter of product installation and length of bores. Include the name, address and phone number of an owner's representative with knowledge of the performance of the Work. Provide at least five previously completed projects of similar scope as the boring Work included in this contract.

2. List of the Contractor's key personnel with a resume of boring experience. The Department will be the sole judge of the qualifications of the foreman and the drill operators.

3. Location of all proposed boring entry and exit pits.

4. Proposed alignment of bore both horizontal and vertical. For the proposed alignment, maintain a minimum clearance of 18 inches (450 mm) or 2 times the diameter of the final product installation, whichever is greater, at any obstruction. Do not perform boring in select backfill areas such as at mechanically stabilized wall locations.
5. Proposed diameter of bore. This diameter is the diameter of the final product installation.
6. Proposed diameter of pilot borehole.
7. Proposed diameter of back reamer. Do not allow the diameter of the back reamer to exceed 1.5 times the diameter of the final product installation.
8. Proposed depth of cover. Ensure the depth of cover will be equal to or greater than 10 times the diameter of the final product installation. Under paved shoulders, maintain a minimum depth of cover of 4 feet (1.22 meters). Under travel lanes or outside of paved shoulders, maintain a minimum depth of cover of 8 feet (2.44 meters).
9. Evaluation of soil conditions to be encountered. A complete soil survey is not required. As a minimum, excavate the entrance and exit pits for the proposed bore and determine the nature of the material likely to be encountered. Base the drilling fluid composition on the evaluation of the materials encountered in the bore pit excavation.
10. Proposed composition of drilling fluid.
11. Proposed drilling fluid pressure and flow rates.
12. Proposed drilling fluid management plan.
13. Proposed pull back rate.
14. Type of tracking system.

Excavate suitable pits or trenches for the boring operation and for placing end joints or termination connectors of conduit when required. Securely sheet and brace pits or trenches where necessary to prevent caving. Where directional boring is required under railroads, highways, streets or other facilities, perform construction in a manner that will not interfere with the operation of the facility, and not weaken the roadbed or structure. Do not disturb or excavate any roadway pavement, subgrade, roadbed, paved shoulder, or unpaved median as part of the boring or pipe placing operation for any reason without written authorization by the Engineer.

In the above areas, unless otherwise authorized in writing by the Engineer, abandon in place any broken or damaged boring rod/stem, boring head (including transmitter/transponder locating heads and cutter heads), couplings (including back reaming, swivel or connector couplings), or any other material that cannot be retrieved as part of the pullback operation. Abandoned material will become the property of the Department. No additional payment for abandoned material will be made.

Continuously monitor the location and alignment of the pilot drill progress to insure compliance with the proposed installation alignment and to verify depth of the bore. Accomplish monitoring by manual plotting based on location and depth readings provided by the locating/tracking system or by computer generated bore logs which map the bore path based on information provided by the locating/tracking system. Obtain readings or plots on every drill rod and provide to the Engineer on a daily basis for as-built plans.

Monitor drilling fluids such as the pumping rate, pressures, viscosity and density during the pilot bore, back reaming, and/or pipe installation stages to ensure adequate removal of soil cuttings and to ensure the stability of the borehole is maintained. Do not allow drilling fluid pressures to exceed that which can be supported by the overburden (soil) pressure to prevent heaving or a hydraulic fracture of the soils. Contain excessive drilling fluids at the entry and exit points until recycled or removed from the site. Dispose of all drilling fluids in a manner acceptable to the appropriate local, state and federal regulations. The Work will be immediately suspended whenever drilling fluids seep to the surface other than in the boring entrance or exit pit. Propose a method to prevent further seepage and remove and dispose of any drilling fluid on the surface prior to resuming the boring operation.

To minimize heaving during pullback, determine the pullback rate to maximize the removal of soil cuttings and minimize compaction of the ground surrounding the borehole. Ensure the pullback rate minimizes over cutting of the borehole during the back reaming operation to ensure excessive voids are not created resulting in post installation settlement. Restore any surfaces damaged by the Work to their preconstruction conditions. All costs associated with the restoration are to be borne by the Contractor.

The distance the excavation extends beyond the end of the bore will depend upon the character of the excavated material. Do not exceed 2 feet (0.61 meters) in any case. If the character of the material being excavated makes it desirable, decrease the

distance on instructions from the Engineer. Once the directional boring has commenced, insofar as practical, continue the operation without interruption. After the boring has been completed, immediately backfill the pits or trenches excavated to facilitate boring operations.

Proceed with the Work from a surface staging area provided for the boring equipment and workers. Obtain approval from the Engineer on the proposed location of the staging area. Bore the holes mechanically. Place excavated material near the top of the working pit and dispose of as required. Water or other fluids in connection with the boring operation will be permitted only to the extent necessary to lubricate cutting. Do not perform jetting. Excavation will not be measured for payment.

In unconsolidated soil formations, a gel-forming colloidal drilling fluid consisting of at least 10% high grade carefully processed bentonite may be used to consolidate excavated material, seal the walls of the hole, and furnish lubrication for subsequent removal of material and immediate back reaming/installation of conduit. Continuously monitor and maintain the flow pressure on the drilling fluid at the minimal pressure required to place the fluid. In normal circumstances, do not exceed a flow pressure of 200 psi (1379 k Pa). At any time during boring operations, do not exceed a flow pressure of 500 psi (3448 k Pa). Remove all drilling fluid spoils from both ends of the bore and properly dispose of material at a properly permitted location.

The maximum allowable variation from line and grade is a maximum of 2 percent. Pressure grout any voids, with an approved mix, that develop during the installation operation and are determined by the Engineer to be detrimental to the Work.

Directional boring operations inherently include the risk of encountering below grade obstructions that begin to alter the bore direction. Should an obstruction be encountered, notify the Engineer immediately. Boring deeper or shallower (if minimum pipe depth can be maintained), moving the boring head to the right or left of the obstruction, or attempt to bore through the obstruction (if other than solid rock) are acceptable corrective measures to restore bore alignment. To restore the bore alignment, perform a minimum of three attempts at each encountered obstruction with different corrective measures. The Engineer may authorize a relocation of the bore if a suitable bore alignment cannot be restored.

F. Removals

Follow all relevant procedures set forth in the Southern Company Overhead Distribution Standards and Southern Company Underground Distribution Standards, current published edition. Remove all temporary and existing electric distribution facilities in accordance with the requirements set forth in the Plans, Work Location Summary Reports, and as instructed by the Distribution Engineer. Cutting of poles specified for removal or abandonment will not be permitted. Remove pole(s) and backfill void in accordance with Section 207. Backfill any voids remaining from the removal of underground facilities in accordance with Section 207. Replace, in-kind (material and depth), any voids remaining in roadway structures.

G. Transfers

Follow all relevant procedures set forth in the Southern Company Overhead Distribution Standards and Southern Company Underground Distribution Standards, current published edition. Transfer all electric distribution facilities in accordance with the requirements set forth in the Plans, Work Location Summary Reports, and as instructed by the Distribution Engineer.

H. Remaining Material

1. Material Originating from Georgia Power Company

   Return all unused material to Georgia Power Company. Provide a detailed summary to the Engineer comparing quantities of material received from Georgia Power Company and material to be returned to Georgia Power Company. The Distribution Engineer will verify and accept or reject all returned material. Credit the Department for any material rejected by Georgia Power Company due to, but not limited to, damage, material loss, or material theft.

2. Material Originating from the Project Site – Existing or Surplus Material

   Properly dispose of all surplus material. With exception to transformers, surplus and properly dispose of any material originating from the project and is not required, or no longer required, for the completion of the Work. Return all transformers to Georgia Power Company.

664.3.06 Quality Acceptance

A. Testing

Follow all relevant procedures set forth in the Southern Company Overhead Distribution Standards and Southern Company Underground Distribution Standards, current edition. Ensure Distribution Engineer is present at all inspection and testing

664.3.07 Contractor Warranty and Maintenance

General Provisions 101 through 150

664.4 Measurement

Overhead and underground electric distribution systems, and other items of Work in this Specification, in place, operational, and accepted, are measured for payment as follows:

A. Overhead Electric Distribution

Overhead Electric Distribution is measured in linear feet for each size (kV) facility installed. The facility is measured along the centerline of the facility from pole structure to pole structure through all fittings, switches, and transformers and shall include the installation of the pole structures and any materials required by the Southern Company Overhead Distribution Standards and Southern Company Underground Distribution Standards, current edition. Measurement will begin and end at existing pole structures where the newly installed Work ties back to the existing facility or specified ending structure. There will be no compensation for replacement of damaged or lost materials. There will be no separate measurement and payment for the transfer of existing materials to new location. Include the costs of transferring materials in the costs for the installation of Overhead and Underground Electric Distribution System, temporary or permanent. If shown on the Plans, installation of distribution service lines will be measured as specified in this Section.

Obtain measurements with electronic survey equipment and provide Engineer with printout of installed facilities indicating State Plane Coordinates and station numbers of each pole structure and indicate distances between pole structures starting from the beginning of the Work (existing facility pole structure).

B. Overhead Electric Distribution (Temporary)

Temporary Overhead Electric Distribution is measured in linear feet for each size (kV) facility installed. The facility is measured along the centerline of the facility from pole structure to pole structure though all fittings, switches, and transformers and shall include the installation of the pole structures and any materials required by the Southern Company Overhead Distribution Standards and Southern Company Underground Distribution Standards, current edition. Measurement will begin and end at existing pole structures where the newly installed Work connects to the existing facility or specified ending structure. There will be no compensation for replacement of damaged or lost materials. There will be no separate measurement and payment for the transfer of existing materials to new location. Include the costs of transferring materials in the costs for the installation of Overhead and Underground Electric Distribution System, temporary or permanent.

Obtain measurements with electronic survey equipment and provide Engineer with printout of installed facilities indicating State Plane Coordinates and station numbers of each pole structure and indicate distances between pole structures starting from the beginning of the Work (existing facility pole structure).

C. Underground Electric Distribution

Underground Electric Distribution is measured in linear feet for each size (kV) facility installed. The facility is measured along the center following the existing ground line from structure to structure through junction boxes, transformers, and vaults and shall include the installation of the pole structures and any materials required by the Southern Company Overhead Distribution Standards and Southern Company Underground Distribution Standards, current edition. Measurement will begin and end at existing pole structures, vault structures, splice point, or termination cabinet where the newly installed Work connects to the existing facility. All measurements will begin and terminate at the intersection of the structure and grade. Measurement for buried facilities that transition up pole structures to tie to the overhead facilities will not be made. There will be no compensation for replacement of damaged or lost materials. There will be no separate measurement and payment for the transfer of existing materials to new location. Include the costs of transferring materials in the costs for the installation

of Overhead and Underground Electric Distribution System, temporary or permanent. Measurement of unsuccessful boring attempts will not be made. Successful directional bores will not be measured for payment.

Obtain measurements with electronic survey equipment and provide Engineer with printout of installed facilities indicating State Plane Coordinates and station numbers of each underground structure and pole structure and indicate distances between structures starting from the beginning of the Work (existing facility structure).

D. Installation of Poles

Installation of Steel, Concrete, and Wood Poles will not be measured separately for payment. Steel, Concrete, and Wood Poles are included in the measurement of the overhead or underground electric distribution, permanent or temporary.

E. Installation of Electric Wire

Installation of Electric Wire will not be measured separately for payment. Wire is included in the measurement of the overhead or underground electric distribution, permanent or temporary.

F. Removal of Overhead Electric Distribution

Removal of the Overhead Electric Distribution is measured in linear feet for each size (kV) facility removed. The facility is measured along the centerline of the facility from pole structure to pole structure through the equipment mounted on the poles including, but not limited to, wire, transformers, switches, capacitor banks, street lights, and reclosures. Measurement will begin and end at existing pole structures where the distribution facility specified for removal connects to the existing facility to remain. There will be no compensation for replacement of damaged or lost materials. There will be no separate measurement and payment for the transfer of existing materials to new location. Include the costs of transferring materials in the costs for the installation of Overhead and Underground Electric Distribution System, temporary or permanent. There will be no separate measurement and payment for backfilling of voids remaining from removal or replacement of roadway section. If shown on the Plans, removal of distribution service lines will be measured as specified in this Section.

Obtain measurements with electronic survey equipment and provide Engineer with printout of installed facilities indicating State Plane Coordinates and station numbers of each pole structure and indicate distances between pole structures starting from the beginning of the Work (existing facility pole structure).

G. Removal of Overhead Electric Distribution (Temporary)

Removal of the Overhead Electric Distribution (Temporary) is measured in linear feet for each size (kV) facility removed. The facility is measured along the centerline of the facility from pole structure to pole structure through the equipment mounted on the poles including, but not limited to, wire, transformers, switches, capacitor banks, street lights, and reclosures. Measurement will begin and end at existing pole structures where the distribution facility specified for removal connects to the existing facility to remain. There will be no compensation for replacement of damaged or lost materials. There will be no separate measurement and payment for the transfer of existing materials to new location. Include the costs of transferring materials in the costs for the installation of Overhead and Underground Electric Distribution System, temporary or permanent. There will be no separate measurement and payment for backfilling of voids remaining from removal or replacement of roadway section.

Obtain measurements with electronic survey equipment and provide Engineer with printout of installed facilities indicating State Plane Coordinates and station numbers of each pole structure and indicate distances between pole structures starting from the beginning of the Work (existing facility pole structure).

H. Removal of Underground Electric Distribution

Removal of Underground Electric Distribution is measured in linear feet for each size (kV) facility removed. The lines are measured along the center following the existing ground line from structure to structure through junction boxes, transformers, and vaults and shall include the removal, if required by the plans, of any materials that are integral to the temporary facility. This includes, but is not limited to, junction boxes, transformers, switching cubicle, and vaults. Measurement will begin and end at existing pole structures or vault structures where the newly installed facility connects to the existing facility. There will be no compensation for replacement of damaged or lost materials. There will be no separate measurement and payment for

the transfer of existing materials to new location. Include the costs of transferring materials in the costs for the installation of Overhead and Underground Electric Distribution System, temporary or permanent. There will be no separate measurement and payment for backfilling of voids remaining from removal or replacement of roadway section.

Obtain measurements with electronic survey equipment and provide Engineer with printout of installed facilities indicating State Plane Coordinates and station numbers of each underground structure and pole structure and indicate distances between structures starting from the beginning of the Work (existing facility structure). There will be no measurement and payment for backfilling of voids left by removed underground equipment.

I. Removal of Poles

Removal of Steel, Concrete, and Wood Poles will not be measured separately for payment. Removal is included in the measurement of the removal of overhead or underground electric distribution, permanent or temporary.

J. Material Credit

Material Credit is a dollar amount credited to the Department for unused or remaining materials rejected by Georgia Power Company as being damaged or destroyed or materials lost or stolen. The amount will be tabulated based on an itemized list from Georgia Power Company and based on unused material remaining from the Work.

664.4.01 Limits

General Provisions 101 through 150

664.5 Payment

The Contract Unit Price for each Item shall include all costs incidental to the construction of the Item according to the Plans, Work Summary Location Report, and as specified in this Section. All such surplus items will become the property of Georgia Power Company unless otherwise specified. Payment for any Item listed below is full compensation for the Item or Items in place, operational, and accepted.

A. Overhead Electric Distribution

Overhead Electric Distribution will be paid for at the contract unit price per linear foot for each size (kV) facility installed. Payment is full compensation for handling, delivery, and storage of material and installation of material in accordance with the Plans and Work Summary Location Reports. Payment is full compensation for necessary handling and delivery of surplus material to Georgia Power Company. Payment is full compensation for all the necessary equipment and labor to install the Overhead Electric Distribution, including all items necessary and items specified in the Work Summary Location Report and Plans. Payment is full compensation for the entire linear feet required to span the portion of the project specified and to tie back to existing facilities. This includes items such as wire, transformers, poles (wood, steel, or concrete), framing assemblies, utility assemblies, conductors, hardware, guy assemblies, street lights, switches, capacitor banks, reclosures and any other item(s) necessary to provide for an in place and accepted operational Overhead Electric Distribution of the size specified in the Plans and Work Summary Location Report. If shown on the Plans, installation of distribution service lines will be paid for as specified in this Section.

B. Overhead Electric Distribution (Temporary)

Temporary Overhead Electric Distribution will be paid for at the contract unit price per linear foot for each size (kV) facility installed. Payment is full compensation for handling, delivery, and storage of materials and installation of materials in accordance with the Plans and Work Summary Location Reports. Payment is full compensation for any work required to accommodate project staging, detours, or structures not shown on the Plans or Work Summary Location Reports. Payment is full compensation for necessary handling and delivery of surplus material to Georgia Power Company. Payment is full compensation for all the necessary equipment and labor to install the Temporary Electric Distribution, including all items necessary and items specified in the Work Summary Location Report and Plans. Payment is full compensation for the entire linear feet required to span the portion of the project specified and to tie back to existing facilities. This includes items such as wire, transformers, poles (wood, steel, or concrete), framing assemblies, utility assemblies, conductors, hardware, guy

assemblies, street lights, switches, capacitor banks, reclosures and any other item(s) necessary to provide for an in place and accepted operational Overhead Electric Distribution of the size specified in the Plans and Work Summary Location Report.

C. Underground Electric Distribution

Underground Electric Distribution will be paid for at the contract unit price per linear foot for each size (kV) facility installed. Payment is full compensation for handling, delivery, and storage of material and installation of material in accordance with the Plans and Work Summary Location Reports. Payment is full compensation for necessary handling and delivery of surplus material to Georgia Power Company. Payment is full compensation for all the necessary equipment and labor to install the Underground Electric Distribution, including all items necessary and items specified in the Work Summary Location Report and Plans. Payment is full compensation for the entire linear feet required to traverse, below grade, the portion of the project specified and to tie back to existing facilities. This includes items such as directional boring, wire, conduit, transformers, vaults, switching cubicle, hardware, and any other item(s) necessary to provide for an in place and accepted operational Underground Electric Distribution of the size specified in the Plans and Work Summary Location Report. Payment of unsuccessful boring attempts will not be made. Successful directional bores will not be paid for separately.

D. Installation of Poles

No separate payment will be made for the installation of Steel, Concrete, or Wood Poles. Costs for the installation of poles are included in the price for overhead or underground electric distribution, permanent or temporary.

E. Installation of Electric Wire

No separate payment will be made for the installation of electric wire. Costs for the installation of electric wire are included in the price for overhead or underground electric distribution, temporary or permanent.

F. Removal of Overhead Electric Distribution

Removal of Overhead Electric Distribution will be paid for at the contract unit price per linear foot for each size (kV) facility removed. Payment is full compensation for removal, handling, delivery, storage, and surplus of materials. Payment is full compensation for necessary handling and delivery of surplus material to Georgia Power Company. Payment is full compensation for all the necessary equipment and labor to remove the Overhead Electric Distribution. Payment is full compensation for the entire linear feet removed back to existing or new facilities as shown on the plans. This includes items such as wire, transformers, poles (wood, steel, or concrete), framing assemblies, utility assemblies, conductors, hardware, guy assemblies, street lights, and any other item(s) necessary for complete removal. If shown on the Plans, removal of distribution service lines will be paid for as specified in this Section.

All material removed and not re-used becomes the property of Georgia Power Company. Payment for Removal of Overhead Electric Distribution includes the removal, handling, delivery, and off loading of all material at a Georgia Power Company Operating Headquarters specified by the Distribution Engineer.

G. Removal of Overhead Electric Distribution (Temporary)

Removal of Overhead Electric Distribution (Temporary) will be paid for at the contract unit price per linear foot for each size (kV) facility removed. Payment is full compensation for removal, handling, delivery, storage, and surplus of materials. Payment is full compensation for all the necessary equipment and labor to remove the Temporary Electric Distribution. Payment is full compensation for the entire linear feet removed back to existing or new facilities as shown on the Plans. This includes items such as wire, transformers, poles (wood, steel, or concrete), framing assemblies, utility assemblies, conductors, hardware, guy assemblies, street lights, and any other item(s) necessary for complete removal.

All material removed and not re-used becomes the property of Georgia Power Company. Payment for Removal of Overhead Electric Distribution (Temporary) includes the removal, handling, delivery, and off loading of all material at a Georgia Power Operating Headquarters specified by the Distribution Engineer.

H. Removal of Underground Electric Distribution

Removal of Underground Electric Distribution will be paid for at the contract unit price per linear foot for each size (kV) facility removed. Payment is full compensation for removal, handling, delivery, storage, and surplus of materials. Payment is full compensation for all the necessary equipment and labor to remove the Underground Electric Distribution. Payment is full compensation for the entire linear feet removed back to existing or new facilities as shown on the Plans. This includes removal of items such as wire, conduit, transformers, vaults, hardware, and any other item(s) necessary for complete removal.

All material removed and not re-used becomes the property of Georgia Power Company. Payment for Removal of Overhead Electric Distribution includes the removal, handling, delivery, and off loading of all material at a Georgia Power Operating Headquarters specified by the Distribution Engineer.

I. Removal of Poles

No separate payment will be made for the removal of Steel, Concrete, or Wood Poles. Costs for the removal of poles are included in the price for removal of overhead or underground electric distribution, permanent or temporary.

J. Material Credit

Return all unused or remaining material back to Georgia Power Company. There will be a Material Credit to the Department from the Contractor for any material damaged or destroyed, lost, stolen, or otherwise rejected by Georgia Power Company.

Material Credit will be paid to the Department on a lump sum dollar amount basis. The amount includes the cost of materials due back to Georgia Power Company, but was rejected due to damage, was destroyed, or was lost, or stolen. The lump sum dollar amount will tabulated based on an itemized list from Georgia Power Company and based on unused material remaining from the Work.

Payment will be made under:

Item No. 664	Overhead Electric Distribution - _____ kV	Per linear foot (meter)
Item No. 664	Overhead Electric Distribution (Service) - _____kV	Per linear foot (meter)
Item No. 664	Overhead Electric Distribution (Temporary) - _____ kV	Per linear foot (meter)
Item No. 664	Underground Electric Distribution - _____ kV	Per linear foot (meter)
Item No. 664	Removal of Overhead Electric Distribution - _____ kV	Per linear foot (meter)
Item No. 664	Removal of Overhead Electric Distribution (Service) - _____kV	Per linear foot (meter)
Item No. 664	Removal of Overhead Electric Distribution (Temporary) - _____ kV	Per linear foot (meter)
Item No. 664	Removal of Underground Electric Distribution - _____ kV	Per linear foot (meter)
Item No. 002	Credit Item -	Per lump sum

664.5.01 Adjustments

General Provisions 101 through 150

Office of Utilities

DEPARTMENT OF TRANSPORTATION
STATE OF GEORGIA

SPECIAL PROVISION

PROJECT: CSMSL-0008-00(690), CHATHAM COUNTY

P.I. No. 0008690

Section 665—Gas Distribution System

Add the following:

665.1 General Description

This Work consists of furnishing materials, labor, tools, equipment, and other items necessary for the complete installation abandonment, removal, relocation, and adjustment of gas distribution systems in accordance to the plans and Specifications.

665.1.01 Definitions

General Provisions 101 through 150

Whenever the terms "Company" or "AGLR" are used in this Special Provision and its related documents, it shall be understood to mean AGL Resources, Inc., its subsidiaries, successors and/or assigns.

The term "Project Coordinator" shall mean the Company's authorized individual having the authority to give instructions pertaining to the work, to approve or reject the work, and otherwise represent the Company. The "Project Coordinator" shall not however be authorized to revoke, alter, enlarge, relax, or release any requirements of the Contract, Plans, and Specifications nor will they act as an agent for the Contractor.

Blast/Hammer Rock: Any formation that requires blasting or means other than a backhoe or ditching machine.

665.1.02 Related References

General Provisions 101 through 150.

A. Standard Specifications

Section 104—Scope of Work

Section 107—Legal Regulations and Responsibility to the Public

Section 108—Prosecution and Progress

Section 205—Roadway Excavation

Section 207—Excavation and Backfill for Minor Structures

Section 210—Grading Complete

Section 400—Hot Mix Asphaltic Concrete Construction

Section 444—Sawed Joints in Existing Pavements

Section 500—Concrete Structures

Section 611—Relaying, Reconstructing or Adjusting to Grade of Miscellaneous Roadway Structures

Section 615—Jacking or Boring Pipe

Section 810—Roadway Materials

B. Related Documents

AGL Resources (AGLR) Construction & Maintenance Manual, current published edition. Contact the Contract Negotiator listed in Section 665.3.01 of this Special Provision to obtain this documentation.

AGL Resources (AGLR) Operation Procedure Manual, current published edition. Contact the Contract Negotiator listed in Section 665.3.01 of this Special Provision to obtain this documentation.

665.1.03 Submittals

General Provisions 101 through 150.

Refer to the AGL Resources (AGLR) Construction & Maintenance Manual, current published edition; for gas utility submittal requirements.

A. As-Built Documentation

Submit to the Project Coordinator and the Engineer as built documentation of all work provided in accordance with this specification prior to Final Acceptance of the Project. Include in the as-built documents the following documents as a minimum as they are applicable. Supply any installation diagrams at the time of installation. Deliver as-builts no later than 30 days after completion of installation.

1. As Built Drawings

   Provide the Department and AGLR with drawings detailing the final installation route of all gas facilities.

   Except for standard bound materials, bind all 8.5”x11” (A4) documentation, including 11” x 17” (A3)drawings folded to 8.5”x11” (A4), in logical groupings in loose-leaf binders of either the 3-ring or plastic slide-ring type. Permanently and appropriately label each such bound grouping of documentation.

   Furnish at least five (5) copies of all bound documentation to both the Engineer and the Project Coordinator.

665.2 Materials

A. Gas Main and Service Line Pipes, Fittings, and Appurtenances

Ensure all materials provided are in conformance with the requirements and standards set forth in the AGL Resources (AGLR) Construction & Maintenance Manual, current published edition.

665.2.01 Materials Certification

For certain products, assemblies, and materials, in lieu of normal sampling and testing procedures by the Contractor, the Company, and the Department, the Engineer and Project Coordinator may accept from the Contractor the manufacturer’s certification with respect to the product involved, under the conditions set forth in the following paragraphs:

1. Ensure certification states/specifies that the named product conforms to the AGL Resources (AGLR) Construction & Maintenance Manual, current published edition and that representative samples thereof have been sampled and tested as specified.
2. The certification shall either:
   a. Is accompanied with a certified copy of the test results, or
   b. Certify such test results are on file with the manufacturer and will be furnished to the Engineer and Project Coordinator upon demand.
3. Ensure certification states/specifies the name and address of the manufacturer and the testing agency and the date of tests; and sets forth the means of identification which will permit field determination of the product delivered to the project as being the product covered by the certification.

4. Submit certification in duplicate with one copy to be sent with the shipment of the covered product to the Department's Project Engineer, and with one copy sent to the Department's State Materials and Research Engineer at 15 Kennedy Drive, Forest Park, Georgia. Ensure certification specifies the project number and contract ID number.

   No Certificate will be required for Portland Cement when furnished from a manufacturer approved by the Department.
5. The Department or the Company will not be responsible for any costs of certification or for any costs of the sampling and testing of products in connection therewith.
6. The Department and the Company reserves the right to require samples and to test products for compliance with pertinent requirements irrespective of prior certification of the products by the manufacturer. Any materials that fail to meet specification requirements will be rejected.

665.2.02 Delivery, Storage, and Handling

General Provisions 101 through 150.

Follow all delivery, storage and handling procedures set forth in the AGL Resources (AGLR) Construction & Maintenance Manual, current published edition.

665.3 Construction Requirements

665.3.01 Personnel

General Provisions 101 through 150.

Ensure the construction and installation of all gas utilities is performed by a contractor prequalified/registered by AGL Resources. Contact AGL Resources at the following to obtain the current list of AGLR prequalified Contractors:

Contract Negotiator / Purchasing
AGL Resources
Ten Peachtree Place
Atlanta, GA 30309
Phone: 404-584-3000

665.3.02 Equipment

General Provisions 101 through 150.

Ensure all equipment used is in conformance with the requirements and standards set forth in the AGL Resources (AGLR) Construction & Maintenance Manual, current published edition.

665.3.03 Preparation

General Provisions 101 through 150.

Follow all preparation procedures set forth in the AGL Resources (AGLR) Construction & Maintenance Manual, current published edition.

665.3.04 Fabrication

General Provisions 101 through 150.

Ensure fabrication procedures and requirements conform to those set forth in AGL Resources (AGLR) Construction & Maintenance Manual, current published edition.

665.3.05 Construction

A. Permission to Enter Private Property

Comply with Section 107—Legal Regulations and Responsibility to the Public

Through an agreement between the Department and the Company; the Contractor is given the permission to enter upon private properties found outside the project's construction limits. This permission is granted for the sole purpose of installing gas service lines only and is limited to the area of existing easements obtained by the company. Such

permission to enter upon private properties is temporary and such rights shall commence upon project award and automatically expire upon completion and project final acceptance by the Department.

In all cases where it is necessary to enter upon private property; it is the Contractors sole responsibility to minimize any disruptions to personal property in the commencement of such work thereof. Additionally the following restrictions and requirements shall apply:

1. All work is limited to the installation, relocation, or replacement of gas service lines, including the work necessary to restore each private property as required in number 6 of this subsection.
2. Notify the Engineer and the private property owner, and resident 72 hours before commencing work on said private property.
3. No vehicles or equipment shall be allowed on any private property except for that which is normally required for the installation of said gas service lines.
4. Do not store any materials, vehicles, or equipment on any private property longer than the duration required to perform the said gas service line installation.
5. Do not use any private property as an on-site detour or vehicle path.
6. Immediately following any construction located on private property the contractor at its sole expense shall restore all areas of the same parcel to a condition substantially the same as existed immediately prior to any such disturbances, including without limitation, any and all necessary repairs, and replacement of grassing, landscaping and pavement which may be removed and excavated by the Contractor. Additionally, the Contractor shall be responsible for all necessary repairs to restore the original contours and re-establish the ground cover to control erosion.

B. Finding Existing Underground Utilities and Obstructions

Comply with Subsection 107.13 and Subsection 107.21.

When unforeseen conflicts require Plan changes, perform the work as altered according to Subsection 104.03 and Subsection 104.04.

Follow all customer notification requirements and obtain approval from the Project Coordinator prior to disrupting existing any gas services required for the installation of the gas facilities shown on the project plans.

C. Excavating Trenches

Excavate trenches to the proper grade, depth, and width as follows:

1. Trench to Grade

   Ensure that excavated trench bottoms are firm, free from boulders, and conform to the established grade.

   a. Backfill, according to Subsection 665.3.05.G, any part of the trench excavated below the established grade. Use Class I or Class II Soils (Section 810), and firmly compact the soil.

   b. Where the established grade of a trench is in rock, undercut the bottom of the trench by at least 6 in (150 mm), then backfill and compact according to Subsection 665.3.05.G.

      Conduct blasting operations strictly according to Subsection 107.12.

   c. Excavate trenches under pavement to grade as follows:

      1) To remove the pavement, cut it at least 24 in (600 mm) wider than each trench edge to provide solid bearing for the pavement edges when replaced. Remove the pavement according to Section 444, except no separate payment will be made for sawed joints.

      2) Directional Bore under existing sidewalks, curbs, gutters, and pavements according to Section 555.

      3) Where possible, jack pipe under an existing pavement according to Section 615, except no separate payment will be made for jacking and boring pipe.

2. Minimum Trench Depth

   Excavate trenches to provide at least 48 in (1.2 m) cover depth from the pipe to the finished pavement surface, sidewalk, grass plot, etc. unless indicated otherwise on the Plans or by the Engineer.

   If any part of a gas main is to be placed in or under a new embankment, finish the embankment to at least a 2 ft (600 mm) plane above the pipe barrel before excavating the trench.

3. Trench Width

   Excavate trenches wide enough to allow proper installation of pipe, fittings, and other materials.

D. Directional Boring

1. Install gas mains and services by means of directional boring at locations shown on the plans or where approved by the Engineer.
2. Ensure that the diameter of the excavation conforms to the outside diameter of the pipe as closely as possible.
3. Remove and replace pipe damaged in boring operations at no additional expense to the Department.
4. Use an approved mix to pressure grout voids that develop during the installation operation and that the Engineer determines are detrimental to the Work.
5. In unconsolidated soil formations, use a gel-forming collodial drilling fluid with at least 10 percent of high grade carefully processed bentonite to consolidate excavated material, seal the walls of the hole, and lubricate subsequent removal of material and immediate pipe installation.
6. Follow all relevant procedures set forth in the AGL Resources (AGLR) Construction & Maintenance Manual, current published edition.
7. Ensure the total installation includes a locatable conduit system, with identification markers on each DOT right-of-way fence line where applicable.
8. Continuously monitor the location and alignment of the pilot drill progress to ensure compliance with the proposed installation alignment and to verify depth of the bore. Ensure Monitoring is accomplished by computer generated bore logs which map the bore path based on information provided by the locating/tracking system. Ensure readings or plots are obtained on every drill rod, and are provided to the Inspector on a daily basis. Upon completion of the bore the Contractor will furnish the Engineer an As-built drawing along with a report of the Monitoring of the drilling fluids during the pilot hole and back reamed hole.
9. Ensure excess drilling fluids are contained at the entry and exit points until recycled or removed from the site as directed by the Engineer at no additional cost to the Department.. Ensure that all drilling fluids are disposed of in a manner acceptable to the appropriate local, state and federal regulations. The Contractor's work will be immediately suspended by the Engineer whenever drilling fluids seep to the surface other than in the boring entrance or exit pit, or when a paved surface is displaced. The Contractor shall then propose a method to prevent further seepage and/or displacement, and shall remove and dispose of any drilling fluid, slurry and soil from the paved surface prior to resuming the boring operation.
10. Ensure surfaces damaged by the work are restored to their preconstruction conditions at no additional cost to the Department, and with no increase in contract time.

E. Connecting to Existing Gas Mains

Connect to existing gas mains at locations shown on the Plans or where approved by the Engineer or Project Coordinator.

Follow all relevant procedures set forth in the AGL Resources (AGLR) Construction & Maintenance Manual, current published edition.

F. Laying Gas Mains and Appurtenances

Follow all relevant procedures set forth in the AGL Resources (AGLR) Construction & Maintenance Manual, current published edition.

G. Installing Gas Mains

Install gas mains at locations shown on the Plans or where approved by the Engineer or Project Coordinator.

Follow all relevant procedures set forth in the AGL Resources (AGLR) Construction & Maintenance Manual, current published edition.

4. Backfilling

   Furnish equipment, labor, and when necessary material required for backfilling the pipe line trenches according to Section 207.

d. When testing for leaks in open trenches, do not backfill until testing is complete and leaks are eliminated.

e. When retaining pavement adjacent to trenches, replace removed pavement with the same or better material when approved.

f. After backfilling, maintain a smooth riding surface until the repaving is complete. No separate payment will be made for replaced pavement unless a bid Item for this work is contained in the Proposal.

H. Laying Service Lines and Appurtenances

Install service lines at locations shown on the Plans or where approved by the Engineer or Project Coordinator. Install new pipe from the gas main to the final location of the meter or to points approved by the Engineer to connect with existing or future service lines on abutting property.

Follow all relevant procedures set forth in the AGL Resources (AGLR) Construction & Maintenance Manual, current published edition.

I. Lowering Existing Gas Lines

Lower existing gas mains and services at locations shown on the plans or where approved by the Engineer or Project Coordinator.

Follow all relevant procedures set forth in the AGL Resources (AGLR) Construction & Maintenance Manual, current published edition.

J. Service Line Tie-Over

Tie existing service line to new service line as shown on the plans or where approved by the Engineer or Project Coordinator. Install new pipe from the gas main to the final location of the Service Line Tie-Over or to points approved by the Engineer or Project Coordinator to connect with existing service lines on abutting property.

Follow all relevant procedures set forth in the AGL Resources (AGLR) Construction & Maintenance Manual, current published edition.

665.3.06 Quality Acceptance

A. Testing Gas Mains and Service Connections

Follow all relevant procedures set forth in the AGL Resources (AGLR) Construction & Maintenance Manual, current published edition.

665.3.07 Contractor Warranty and Maintenance

General Provisions 101 through 150.

665.4 Measurement

Gas mains, service lines, and other items of work in this Specification, complete, in place, and accepted, are measured for payment as follows:

A. Gas Mains

Gas mains are measured in linear feet (meter) for each size installed. The mains are measured along the center, parallel to the slope of the pipe, from end of each installation through all valves and fittings, and shall include the installation of valves, anodes, test wires, and test stations as dictated by the AGL Resources (AGLR) Construction & Maintenance Manual, current published edition.

B. Fittings

Pipe fittings are considered incidental to the gas line in which they are used and are not measured for separate payment.

C. Tie-ins and Valves Installations

All tie-ins and valve installations associated with tie-ins and regulator stations are not measured for separate payment and shall be included in the per foot price of installed gas main.

D. Service Line Tie-Over

Service line Tie-Overs are measured by the number of each size, material, and type installed. The types specified will either be short side service tie-over for those that do not require the crossing of a street or roadway; and long side service tie-over when the installation will span a roadway.

E. Service Lines

Service lines are measured by the number of each size, material, and type installed. The types specified will either be short side service for those that do not require the crossing of a street or roadway; and long side service when the installation will span a roadway.

F. Gas Facilities to be Abandoned or Removed

The abandonment or removal of all deactivated facilities is not measured for separate payment and shall be included in the per foot price of installed gas main. Abandoned or removal of facilities include: main, valves, service, service risers and regulator stations and pits.

G. Blast/Hammer Rock

Blast/Hammer Rock is not measured for payment separately.

H. Gas Main and Service Testing

There is no separate measurement for payment on the testing of gas mains and services, as required by the Company and addressed in the AGLR Construction and Maintenance Manual.

I. Steel Casing

Steel Casings are measured per linear foot (meter) for each size of casing installed. Payment is full compensation for furnishing all materials, excavating, backfilling, removing, and replacing pavement, and providing other incidentals necessary to complete the Item.

J. Excavation for Trenches or Directional Boring

Excavation or Directional Boring is not measured for payment separately, but their costs are included in the amount bid for the Item to which it pertains.

K. Incidentals

Backfilling, pavement removed, pavement replaced, and other incidentals are not measured for separate payment.

665.4.01 Limits

General Provisions 101 through 150.

665.5 Payment

The Contract Unit Price for each Item, complete and accepted, will include all costs incidental to the construction of the Item according to the Plans and as specified in this Section.

The Unit Prices bid will include due allowance for the salvage value of all materials removed from existing or temporary lines, and not installed in the completed work. All such surplus items will become the property of the Contractor unless otherwise specified.

Payment for any Item listed below is full compensation for the Item or Items, complete in place. When placing gas mains or service lines in casings, receive separate payment for the cost of furnishing and installing the casings.

A. Gas Mains

Gas Mains will be paid for at the Contract Unit Price per linear foot (meter) for each size of pipe installed. Payment is full compensation for furnishing all materials including fittings, excavating, backfilling, removing, and replacing pavement, testing and sterilizing, and providing other incidentals necessary to complete the Item. Payment will also include the cost of laying pipe in casing when required.

B. Service Line Tie-Over

Service Line Tie-Overs will be paid for at the Contract Unit Price per each for each type (Long Side, or Short Side), size and material installed. Payment is full compensation for excavating, erosion control, backfilling, removing, and replacing pavement, testing and placing fittings, jointing, and connecting to the main, and providing other incidentals necessary to complete the Item. Payment will also include all work referenced in Section 665.3.05.A.6 of this specification and laying pipe in casing when required.

C. Service Lines

Service Lines will be paid for at the Contract Unit Price per each for each type (Long Side, or Short Side), size and material installed. Payment is full compensation for excavating, erosion control, backfilling, removing, and replacing pavement, testing and placing fittings, jointing, and connecting to the main, and providing other incidentals necessary to complete the Item. Payment will also include all work referenced in Section 665.3.05.A.6 of this specification and laying pipe in casing when required.

D. Excavation for Trenches or Directional Boring

No separate payment will be made for excavation or directional boring.

E. Blast/Hammer Rock

No separate payment will be made for Blast/Hammer Rock, but its costs are included in the project's total amount bid for earthwork.

F. Steel Casing

Steel Casings will be paid for at the Contract Unit Price per linear foot (meter) for each size of casing installed. Payment is full compensation for furnishing all materials, excavating, backfilling, removing, and replacing pavement, and providing other incidentals necessary to complete the Item.

Payment will be made under:

Item No. 665	Plastic Gas main_____ in (mm)	Per linear foot (meter)
Item No. 665	Steel Casing_____ in (mm)	Per linear foot (meter)
Item No. 665	Short Side Service ___in (mm),(material)	Per each
Item No. 665	Long Side Service ___in (mm),(material)	Per each
Item No. 665	Short Side Service Tie-Over ___in (mm),(material)	Per each
Item No. 665	Long Side Service Tie-Over ___in (mm),(material)	Per each

DEPARTMENT OF TRANSPORTATION
STATE OF GEORGIA
SPECIAL PROVISION

Project: CSMSL-0008-00(690)
County: Chatham
P.I. No. 0008690

SECTION 682 – ELECTRICAL WIRE, CABLE, AND CONDUIT

Section 682 - Electrical Wire, Cable, And Conduit

Add the following:

Delete Subsection 682.1 General Description and substitute the following:

682.1 General Description

This work includes furnishing and installing wire, cable, and conduit for roadway and structure lighting systems, complete or as indicated on the Plans. This work also consists of furnishing and installing a Multi-cell or Continuous Flexible Conduit System for Fiber Optic Cable, complete or as indicated on the Plans. The installation of conduit for fiber optic cable shall not require the presence of a qualified electrician on the job site.

Add the following to Subsection 682.2:

All multi-cell and continuous flexible conduit products shall meet the General Specifications as set out in these Special Provisions. Those products shall be installed, applied, inspected, and/or utilized in accordance with the Construction Section of these Special Provisions. Prior to any conduit work and within 60 days after Notice to Proceed, submit catalog sheets, engineering drawings, and maintenance procedures for review by the Engineer for all products and procedures in these Special Provisions to be used on the Project. If the products to be used are not specified within these Special Provisions or not listed separately and/or completely on the details of the Plans, submit catalog sheets, engineering drawings, factory specifications, a set of installation procedures, and a set of operation and maintenance procedures (for multi-cell conduit) for review by the Engineer. No work shall be done using these products until after submittals have been approved by the Engineer.

A summary of the products, their Sections, and each product's specification included in these Special Provisions are listed below:

A. MARKING TAPE .....Section 682.2.03

Visible marking tape, location and warning system.

B. CONDUIT, NONMETAL, TYPE 2 - POWER SERVICE .....Section 682.2.04

All conduit shall be Schedule 40 polyvinyl chloride.

C. MULTI-CELL FACTORY INSTALLED DUCT SYSTEM.....Section 682.2.05

The multi-cell innerducts shall be colored red, white, yellow, and orange, and utilized as noted: red = hybrid fiber optic cable; white = open spare/interconnect/control circuit; yellow = single mode fiber optic cable; and orange = multi-mode fiber optic cable.

D. CONDUIT DUCT BANK.....Section 682.2.06

Conduit duct bank shall be a configuration of high density polyethylene conduits.

E. CONDUIT, NONMETAL, TYPE 3.....Section 682.2.07

F. CONDUIT, FIBERGLASS .....Section 682.2.08

G. PULL TAPE .....Section 682.2.09

H. DUCT PLUGS .....Section 682.2.10

I. CONDUIT DETECTION WIRE .....Section 682.2.11

J. ELECTRICAL COMMUNICATION BOX.....Section 682.2.13

K. ELECTRICAL COMMUNICATION BOX REHABILITATION.....Section 682.2.14

Add the following Subsections: 682.2.02 – 682.2.14

682.2.02 MATERIAL CERTIFICATION

The following chart provides an outline of the submittal requirements for the equipment and components for this pay item. This chart shall be used as a guide and does not relieve the Contractor from submitting additional information to form a complete submittal package.

Submit submittal data for all equipment, materials, test procedures, and routine maintenance procedures required for these items within 60 calendar days after the Notice To Proceed and prior to any installation, unless noted otherwise in the Contract Documents.

Submit to the Engineer for approval, six (6) copies of the manufacturer's descriptive literature (catalog cuts), technical data, operational documentation, service and maintenance documentation, and all other materials required within these Special Provisions.

Provide submittal data that is neat, legible, and orderly. Neatly organize each package of submittal data and separate by hardware item. Use the "Materials Certification Package Index and Transmittal Form", contained in Section 105.02 of the Special Provisions, for each pay item to document and list all material and components that are included in the submittal package. Any submittal data submitted without the index/transmittal form or that is incomplete will be rejected.

Item	Specification Section	Catalog Cuts	Installation Procedure	Installation Equipment	Maintenance Procedures
Marking Tape	682.2.03	X			
Conduit, Nonmetal, Type 2 - Power Service	682.2.04	X			
Multi-Cell Factory Installed Duct System	682.2.05	X	X		X
HDPE Conduit in Duct Banks	682.2.06	X			
Couplings	682.2.06	X	X	X	
Conduit, Nonmetal, Type 3	682.2.07	X			
Couplings	682.2.07	X	X	X	
Conduit, Fiberglass	682.2.08	X			
Pull Tape	682.2.09	X			
Duct Plugs	682.2.10	X			
Conduit Detection Wire	682.2.11	X			
Electrical Communication Box, Type ___	682.2.13	X			
Electrical Communication Box Rehabilitation	682.2.14	X			

Submittal data shall include complete technical and performance specifications on all elements of the conduit system. Below is a sample listing of submittal data requirements by 682.X.X subsection.

For *Subsection 682.2.03 Marking Tape* submit materials submittal data for the marking tape.

For *Subsection 682.2.04 Conduit, Nonmetal, Type 2 - Power Service* submit materials submittal data for the conduit, fittings, pull boxes, and electrical service wire.

For *Subsection 682.2.05 Multi-Cell Factory Installed Conduit System* submit materials data for the conduit system, innerduct, outerduct, coupling body, fittings, accessories, bends and sweeps, installation procedures, and maintenance procedures.

For *Subsection 682.2.06 Conduit Duct Bank* submit materials submittal data for conduit, couplings, and coupling procedures.

For *Subsection 682.2.07 Conduit, Nonmetal, Type 3* submit materials submittal data for conduit, couplings, and coupling procedures.

For *Subsection 682.2.08 Conduit, Fiberglass* submit materials submittal data for conduit, couplings and fittings, and coupling and fittings procedures.

For *Subsection 682.2.09 Pull Tape* submit materials submittal data for pull tape and installation procedure.

For *Subsection 682.2.10 Duct Plugs* submit materials submittal data for duct plugs for empty conduit and duct plugs with cable installed.

For *Subsection 682.2.11 Conduit Detection Wire* submit materials submittal data for conduit detection wire and testing procedure.

For *Subsection 682.2.13 Electrical Communication Box, Type ___* submit materials submittal data for electrical communication box, ring and cover, conduit terminators, cable racks and hardware, sealant, and conduit alignment jigs or spacers.

For *Subsection 682.2.14 Electrical Communication Box, Rehabilitation* submit materials submittal data for cable racks and hardware.

682.2.03 MARKING TAPE SPECIFICATIONS

A. Requirement For Use

When fiber optic cable is installed underground in conduit or directly buried or when empty conduit is installed, install a dielectric marking tape directly over the conduit or cable below finished grade. The tape shall be installed for the full length of the cable or conduit run. When the conduit or cable is in a trench backfilled with full depth concrete, no marking tape shall be installed.

B. Printing

The color of the tape shall be orange with "GEORGIA DOT FIBER OPTIC CABLE-CALL 1-404-624-2661" printed every 6.5 ft (2.0 m).

C. Physical Properties

The tape shall be a dielectric, polyolefin film tape, 0.004 in. (0.1 mm) thick, 3 in. (76 mm) wide. The tape shall be constructed using material and ink colors which will not change when exposed to acids and other destructive substances commonly found in the soil.

The physical test methods along with typical properties and values are specified below:

PROPERTY	METHOD	VALUE
Standard Weight	ASTM-D2103	0.02 lb/ft^2 (0.1 kg/m^2)
Thickness-Overall	ASTM-D2103	0.004 in. (0.1 mm)
3" Tensile Break-MD	ASTM-D882	35 lbf (160 N)
3" Tensile Strength-MD	ASTM-D882	2900 psi (20000 kPa)
3" Tensile Break-TD	ASTM-D882	38 lbf (170 N)
3" Tensile Strength-TD	ASTM-D882	3160 psi (21790 kPa)
Elongation-MD	ASTM-D882	530%
Elongation-TD	ASTM-D822	660%
PPT Resistance-MD	ASTM-D2582	12 lbf (53 N)
PPT Resistance-TD	ASTM-D2582	14 lbf (62 N)
Tear Strength-3" x 8"-MD	ASTM-D2261	24 lbf (110 N)
Tear Strength-3" x 8"-TD	ASTM-D2261	32 lbf (140 N)

PPT – Puncture Propagation Tear
MD/TD – Machine Direction/ Transverse Direction

682.2.04 POWER SERVICE, NONMETAL, TYPE 2 - POWER SERVICE

Install conduit as indicated in the Plans. Conduit and fittings shall be Schedule 40 unplasticized PolyVinyl Chloride (PVC) that meets Federal Specification WC-1904-A. If the conduit is shown in the plans crossing pavement, install the conduit under the pavement via the directional bore method in accordance with Section 615 and Details. If using the directional bore method of installation, install a Schedule 40, UL-listed conduit suitable for being installed via the directional bore method that does not require solvent welds. Install Type 2 pull boxes if in unpaved shoulder or concrete ground mounted electrical junction boxes if in pavement along the conduit route between the electrical service pole and the equipment cabinet requiring power. Install the pull boxes as described in Section 647 and in Details that meet requirements in Section 925 except that the covers should be furnished with the logo "ELECTRICAL". Make any repairs to pavement required as a result of the installation of electrical junction boxes in accordance with Department standards. Within the conduit and pull boxes, install

electrical service wire that meets requirements in Section 922. Install any transformers as may be required because of voltage drops between the electrical service pole and the equipment cabinet requiring power.

682.2.05 MULTI-CELL "FACTORY INSTALLED" CONDUIT SYSTEM

A. DESCRIPTION

The multi-cell conduit system shall be a pre-assembled conduit manufactured from a 4 in. (102 mm) round outerduct containing either 3 or 4 factory installed round innerducts. The innerducts shall be held together in a square (4 conduit system) or triangular (3 conduit system) configuration by a system of spacers, bands, or other mechanism. The coupling system shall be resistant to water infiltration, air loss during cable installation and shall be capable of locking the system tightly together in order to not allow free twisting of the innerducts.

B. OUTERDUCT

All outerduct shall be 4 in. (102 mm) trade size and shall have a nominal 20 ft (6 m) lay length except for the steel conduit which shall have a minimum lay length of 10 ft (3 m). Types to be used shall be designated on the plans or in the proposal. All outerduct shall conform to the following requirements.

1. The outerduct shall have the following identification information:

Line text height shall be at least ½ in. (10 mm). Text labeling shall occur a maximum of every 2 ft (0.6 m). The text shall be indelibly printed in high contrast to the conduit. The text shall be oriented to face up for underground installation; the text shall be oriented to face down for under bridge installation.

2. The duct shall be marked with data which will provide traceability of the manufacturer, plant location, date, shift, and machine of manufacturer.

3. Any additional wording on the conduit, such as "this side up" or "this side down", shall be consistent with the installation orientation.

4. The spigot end of the duct shall have a circumferential insertion depth mark to insure that proper insertion depth is achieved. This mark is not required for spigots with threaded fittings.

C. INNERDUCT

Innerduct shall be manufactured from Poly-vinyl Chloride (PVC) or High Density Polyethylene (HDPE).

D. COUPLING BODY

The multi-cell conduit shall be joined by use of a coupling system which effectively seals the outerducts and innerducts but allows for expansion or contraction in the system.

E. ACCESSORIES AND FITTINGS

The multi-cell conduit system shall be furnished with all necessary fittings and accessories. These shall include, but shall not be limited to, coupling kits, lubrication fittings, repair kits, manhole terminator kits w/plugs, installation accessories, deflection fittings, and epoxy adhesive kits. Each multi-cell system shall offer a complete line of fixed, rigid bends and sweeps. For applications in which the multi-cell conduit system is specified on the Plans and/or by the Engineer to be attached to a bridge or other structure, bridge hanger assemblies, expansion joints, and conduit support devices shall be required. These hanger assemblies, expansion joints, and support devices shall be designed for application to the specific bridge or structure for which they will be used, and their materials and design shall be approved by the Department prior to their use.

F. MATERIALS

Provide the Engineer with Manufacturer's test results for the required testing and certification in accordance with Subsection 106.05 of the Georgia Standard Specifications.

1. OUTERDUCT
   a. Schedule 40, Polyvinyl Chloride (PVC) Conduit - Schedule 40, polyvinyl chloride (PVC) conduit shall conform to the requirements of the National Electrical Manufacturers Association (NEMA) Standards Publication No. TC-6 and 8-2003, Type DB-120, except that the conduit shall be white in color and shall have a minimum 5 in. (127 mm) long integral bell to accommodate the coupling body.

   b. Type "C", Polyvinyl Chloride (PVC) Conduit - Type "C," polyvinyl chloride (PVC) conduit shall conform to the requirements of the National Electrical Manufacturers Association (NEMA) Standards Publication No. TC-6 and 8-2003, Type DB-120, except that the conduit shall be white in color and shall have a minimum 5 in. (127 mm) long integral bell to accommodate the coupling body.

   c. Steel Conduit - Rigid steel conduit shall meet the requirements of Sub-Section 923.2 of The Georgia Standard Specifications. All metal accessories and fitting used with the conduit shall be compatible and shall meet the galvanization requirements of Sub-Section 923. 2.

   d. "Bullet Resistant" Fiberglass Conduit - Bullet resistant fiberglass conduit shall have a minimum wall thickness of 0.250 in. (6.35 mm). The conduit shall prevent the penetration of a 0.45 caliber slug fired from a distance of 20 ft (6 m). The conduit shall conform to the following requirements when tested in accordance with the referenced specification. All accessories and fittings, including outerduct couplings and expansion joints, shall meet all the same "bullet resistant" requirements as the conduit. All conduit and fittings shall be black.

PHYSICAL AND MECHANICAL PROPERTIES	TEST METHODS
Ultimate Tensile Strength - 11,000 PSI (75800 kPa) Min.	ASTM D 2105
Dielectric Strength - 500 Volts/Mil.	ASTM D 149
Water Absorption - 1% Max.	ASTM D 570
Specific Gravity - 1.9 - 2.0	ASTM D 792
Glass Content - 68 +- 2%	API SPEC 15 LR
Barcol Hardness - 58-52	ASTM D 2583

2. INNERDUCT (WITHIN MULTI-CELL)
   Innerducts shall be manufactured from polyvinyl chloride (PVC) or high density polyethylene (HDPE). Innerducts shall be factory treated with an atomized silicone or manufactured in a manner to reduce friction during pulling of fiber optic cable. Innerduct to be used in bends and sweeps shall have a minimum burn through time of 30 minutes when tested in accordance with Generic Requirement GR-356-CORE, Issue 1, October 1995. The dimensions of innerduct shall meet the requirements of the manufacturer's catalog cuts approved by the Department.

   a. PVC INNERDUCT
      PVC innerduct shall be factory treated with an atomized silicone to reduce friction. The innerduct shall conform to the following requirements:

COLOR OF INNERDUCTS	NOMINAL SIZE
3-way (2 gray & 1 white)	1 1/2" (38 mm)
4-way (3 gray & 1 white)	1 1/4" (32 mm)

      Note: The white innerduct shall be located directly under the print line on the outerduct.

      Alternate innerduct colors shall be permitted only when requested in writing and upon receiving written approval from the Engineer.

   b. HDPE INNERDUCT
      HDPE innerduct shall have a permanent dry lubricant extruded within the inner wall and shall incorporate longitudinal ribs within the inner wall. HDPE innerduct shall conform to the following requirements:

COLOR OF INNERDUCTS	NOMINAL SIZE
3-way (yellow, orange, red)	1 1/2" (38 mm)

4-way (red, white, yellow, orange)	1 1/4" (32 mm)

Innerduct colors shall be oriented in a clockwise direction as shown above, looking at the spigot end of the multi-cell conduit system. The white innerduct for 4-way and yellow innerduct for 3-way shall be located directly under the print line on the outerduct.

Alternate innerduct colors shall be permitted only when requested in writing and upon receiving written approval from the Engineer.

3. COUPLING BODY
The coupling body shall be designed with either 3 or 4 bores as required. The coupling body shall be designed so that when the conduit is joined, the outer walls of the innerducts and the inner walls of the outerduct shall be sealed, providing an airtight seal from within the innerduct system and a watertight seal from the outside of the outerduct. The coupling body shall be tested for water tightness and air tightness per Bellcore TA-NWT-000356 and shall conform to the following specifications.

Water infiltration: minimum 11-foot head or more for 7 days
Air Tightness: minimum 100 PSI (690kPa)

4. BENDS AND SWEEPS
Each multi-cell system shall offer a complete line of fixed bends and sweeps. No flexible bends will be permitted. HDPE, PVC, and bullet resistant fiberglass bends and sweeps shall have compatible bell and spigot ends. Steel conduit bends and sweeps shall have compatible threads and reversing couplings for connection to the conduit. PVC innerducts shall not be allowed in bends and sweeps. In no case shall bends and sweeps exceed a 90 degree direction change. Bends and sweeps shall be available as follows:

Fixed Bends: Fixed bends for steel conduit shall be available in no less than 4 ft (1.22 m) radii in 11 1/4 degrees, 22 1/2 degrees, 45 degrees, and 90 degree bends. Fixed bends for PVC and bullet resistant fiberglass multicell conduit shall be available in radii no less than the following:

RADIUS	DEGREE BEND
4 ft. (1.22 m)	11 1/4 degrees
6 ft. (1.83 m)	22 1/2 degrees
9 ft. (2.74 m)	45 and 90 degrees

682.2.06 CONDUIT DUCT BANK

A. MATERIAL

Install Conduit Duct Banks by configuring individual conduits into a continuous duct bank from termination point to termination point as shown in the Standard Details and other Contract Documents. Conduit Duct Bank, Type 1 shall include six 1-¼" (32 mm) conduits and three 2" (51 mm) conduits. Conduit Duct Bank, Type 2 shall include eight 1-¼" (32 mm) conduits and three 2"(51 mm) conduits. Conduit Duct Bank, Type 3 shall include four 2"(51 mm) conduits. Conduit Duct Bank, Type Special shall be as shown in the Plans.

Conduit shall be manufactured from virgin high-density polyethylene. Conduit shall be extruded from colored material for uniform full-thickness coloring. Where striping is required, a minimum of three colored longitudinal stripes of HDPE material shall be co-extruded on the conduit outer wall. The three stripes shall be equally spaced around the circumference and continuous for the entire length of conduit. Printed or embossed striping is not permitted.

All conduit shall be labeled with durable identification giving the name of the manufacturer, conduit size (inner diameter trade size and wall thickness/rating), manufacture/date codes, and sequential foot marking. Labeling shall occur at a maximum of every 2 ft (0.6 m).

Where required in the Contract Documents, conduits shall be located and secured in the conduit duct bank by conduit spacers configured into an assembly that is appropriate for the duct bank type.

1. 1-¼ in. (32 mm) Conduit
1-¼ in. (32 mm) Conduit shall conform to ASTM D-3035 and meet the following requirements:

- Smoothwall SDR 11
- Nominal outer diameter: 1.660 in. (42.16 mm)
- Minimum inner diameter: 1.313 in. (33.35 mm)
- Minimum wall thickness: 0.151 in. (3.84 mm)

2. 2 in. (51 mm) Conduit
   2 in. (51 mm) Conduit shall conform to ASTM D-3035 and meet the following requirements:

   - Smoothwall SDR 11
   - Nominal outer diameter: 2.375 in. (60.32 mm)
   - Minimum inner diameter: 1.885 in. (47.88 mm)
   - Minimum wall thickness: 0.216 in. (5.49 mm)

3. Conduit Spacer
   Conduit spacers shall be steel or molded high impact polystyrene that is resistant to rot and moisture absorption. Spacers shall be manufactured to have an interlocking design such that spacers for different conduits can be assembled for the appropriate duct bank configuration. All spacers on the bottom of an assembly shall be "base" that includes a flat base with a minimum of 6 in^2 (3900 mm^2) of bearing area for each bottom conduit.

B. COUPLING

Make every effort to minimize coupling. Coupling shall only be permitted with the advance permission of the Engineer.

Couplings shall be airtight and watertight. All couplings shall be installed in accordance with the conduit and the coupling manufacturer's recommendations. Only couplings of the type specified below and approved by the conduit manufacturer are permitted.

Couplings shall be accomplished only by hydraulic press-on or electro-fusion coupling methods. Use hydraulic press-on couplings of seamless tool-grade tubular aluminum with sealing barbs and center stop. Use hydraulic compression duct coupling tools and follow all manufacturer's installation procedures, fully inserting both conduit sections to the coupling center stop. Use pre-fabricated electro-fusion couplings that are field-installed using the coupling manufacturer's recommended automatic self-monitoring fusing machine and installation procedures. Do not use any other coupling methods.

C. TERMINATION

Conduit duct banks shall be terminated in electrical communications boxes (ECBs) and pull boxes as shown in the Standard Details of the Contract Documents and in accordance with Section 647. Duct banks terminated in ECBs shall be installed into factory-installed knockout windows only, which shall be fully grouted and sealed around all conduits and to the full thickness of the box wall. Duct banks terminated in pull boxes shall be installed into factory-installed conduit terminators; conduit adhesive sealants recommended by the terminator and conduit manufacturers shall be used.

682.2.07 CONDUIT, NONMETAL, TYPE 3

A. MATERIAL

Conduit shall be manufactured from virgin high-density polyethylene (HDPE). Conduit shall be extruded from colored material for uniform full-thickness coloring. Where striping is required, a minimum of three colored longitudinal stripes of HDPE material shall be co-extruded on the conduit outer wall. The three stripes shall be equally spaced around the circumference and continuous for the entire length of conduit. Printed or embossed striping is not permitted. Unless otherwise noted in the Contract Documents, color code for conduit used for Type 3 installation shall comply with the Conduit Duct Bank Color Code schedule listed on the plan detail sheet. .

All conduit shall be labeled with durable identification giving the name of the manufacturer, conduit size (inner diameter trade size and wall thickness/rating), manufacture/date codes, and sequential foot marking. The conduit shall also be labeled with the following: "Georgia DOT Cable – For Assistance Call 404-624-2661". Labeling shall occur a maximum of every 4 ft. (1.2 m).

1. 1 in. (25 mm) Conduit
   1 in. (25 mm) Conduit shall conform to ASTM D-3035 and shall meet the following requirements:
   - Smoothwall SDR 11
   - Nominal outer diameter: 1.315 in. (33.40 mm)
   - Minimum inner diameter: 1.030 in. (26.16 mm)
   - Minimum wall thickness: 0.120 in. (3.05 mm)

2. 1¼ in. (32 mm) Conduit
   1¼ in. (32 mm) Conduit shall conform to ASTM D-3035 and shall meet the following requirements:
   - Smoothwall SDR 11
   - Nominal outer diameter: 1.660 in. (42.16 mm)
   - Minimum inner diameter: 1.313 in. (33.35 mm)
   - Minimum wall thickness: 0.151 in. (3.84 mm)

3. 1½ in. (38 mm) Conduit
   1½ in. (38 mm) Conduit shall conform to ASTM D-3035 and shall meet the following requirements:
   - Smoothwall SIDR 11
   - Nominal outer diameter: 1.900 in. (48.26 mm)
   - Minimum inner diameter: 1.506 in. (38.25 mm)
   - Minimum wall thickness: 0.173 in. (4.39 mm)

4. 2 in. (51 mm) Conduit
   2 in. (51 mm) Conduit shall conform to ASTM D-3035 and shall meet the following requirements:
   - Smoothwall SDR 11
   - Nominal outer diameter: 2.375 in. (60.32 mm)
   - Minimum inner diameter: 1.885 in. (47.88 mm)
   - Minimum wall thickness: 0.216 in. (5.49 mm)

B. COUPLING

Make every effort to minimize coupling. Coupling shall only be permitted with the advance permission of the Engineer.

Couplings shall be airtight and watertight. All couplings shall be installed in accordance with the conduit and the coupling manufacturer's recommendations. Only couplings of the type specified below and approved by the conduit manufacturer are permitted.

Couplings shall be accomplished only by hydraulic press-on or electro-fusion coupling methods. Use hydraulic press-on couplings of seamless tool-grade tubular aluminum with sealing barbs and center stop. Use hydraulic compression duct coupling tools and follow all manufacturer's installation procedures, fully inserting both conduit sections to the coupling center stop. Use pre-fabricated electro-fusion couplings that are field-installed using the coupling manufacturer's recommended automatic self-monitoring fusing machine and installation procedures. Do not use any other coupling methods.

C. TERMINATION

Install Type 3 conduits in pull boxes in accordance with Section 647 and the Standard Details of the Contract Documents. Unless otherwise shown in the Plans, install Type 3 conduits in different types of underground spaces as follows. Type 3 conduits shall be terminated in electrical communications boxes (ECBs) and Types 6 and 7 pull boxes using factory-installed terminators in the ECB or pull box; conduit adhesive sealants recommended by the terminator and conduit manufacturers shall be used. Type 3 conduits shall be terminated in Types 1, 2, 3, 4S and 5S pull boxes bonded to a PVC sweep through the open bottom. Type 3 conduits shall be terminated in Types 4 and 5 pull boxes directly through cored holes in the side walls in accordance with Section 647.

682.2.08 CONDUIT, FIBERGLASS

A. MATERIAL

Conduit shall be manufactured from fiberglass reinforced epoxy. The conduit shall be "bullet resistant", capable of preventing the penetration of a 0.45 caliber slug fired from a distance of 20 ft. (6 m). The conduit shall conform to the following physical and mechanical properties when tested in accordance with the referenced specification. All accessories and fittings, including outerduct couplings and expansion joints, shall meet all the same "bullet resistant" requirements as the conduit. All conduit and fittings shall be black.

PHYSICAL AND MECHANICAL PROPERTIES	TEST METHODS
Ultimate Tensile Strength - 11,000 PSI (75800 kPa) Min.	ASTM D 2105
Dielectric Strength - 500 Volts/Mil.	ASTM D 149
Water Absorption - 1% Max.	ASTM D 570
Specific Gravity - 1.9 - 2.0	ASTM D 792
Glass Content - 68 +- 2%	API SPEC 15 LR
Barcol Hardness - 58-52	ASTM D 2583

All conduit shall conform to the following requirements:

a. The conduit shall have the following identification information:

Line text height shall be at least ½ in. (10 mm). Text labeling shall occur a maximum of every 2 ft. (0.6 m). The text shall be indelibly printed in high contrast to the conduit. The text shall be oriented to face up for underground installation; the text shall be oriented to face down for under bridge installation.

b. The duct shall be marked with data which will provide traceability of the manufacturer, plant location, date, shift, and machine of manufacturer.

c. Any additional wording on the conduit, such as "this side up" or "this side down", shall be consistent with the installation orientation.

d. The spigot end of the duct shall have a circumferential insertion depth mark to insure that proper insertion depth is achieved. This mark is not required for spigots with threaded fittings.

1. 2 in. (51 mm) Conduit

   2 in. (51 mm) Conduit shall meet the following requirements:

   - Nominal outer diameter: 2.500 in. (tolerance +0.028"/-0.018")
   - [63.50 mm (tolerance +0.71/-0.46)]
   - Minimum inner diameter: 2.000 in. (50.80 mm)
   - Minimum wall thickness: 0.250 in. (6.35 mm)

2. 4 in. (102 mm) Conduit

4 in. (102 mm) Conduit shall meet the following requirements:

- Nominal outer diameter: 4.500 in. (tolerance +0.034”/-0.028”)
- [114.3 mm (tolerance +0.86/-0.71)]
- Minimum inner diameter: 4.000 in. (101.6 mm)
- Minimum wall thickness: 0.250 in. (6.35 mm)

B. COUPLINGS AND FITTINGS

Coupling shall be by epoxy adhesive interference joint with bell and spigot or stop coupling fittings only. Couplings shall be airtight and watertight. All couplings shall be installed in accordance with the conduit and the coupling manufacturer’s recommendations. Only couplings of the same type of fiberglass as specified above are permitted.

Fixed bends and sweeps shall be used; no flexible bends are permitted. Bends and sweeps shall be compatible with the coupling requirements above. Bends and sweeps shall be of consistent radius and inner diameter, with a minimum radius of 10 times the inner diameter. In no case shall bends exceed a 90 degree direction change.

Where the fiberglass conduit is specified in the Plans and/or by the Engineer to be attached to a bridge or other structure, bridge hanger assemblies, expansion joints, deflection fittings, and conduit support devices are required and shall be designed for application to the specific bridge or structure for which they will be used. The Department shall approve all materials and design of bridge-attached conduit systems prior to any field installation. All bridge hanger assembly components that are in contact with the conduit’s outer surface shall be manufactured of the same fiberglass reinforced epoxy material or shall employ low-friction roller bushings.

C. TERMINATION

Fiberglass conduits shall be terminated in ECBs using factory-installed terminators in the ECB or by grouting and setting in a knockout window as shown in the Standard Details of the Contract Documents. Adhesive sealants recommended by the terminator and conduit manufacturers shall be used.

682.2.09 PULL TAPE

A. MATERIAL

Non-detectable pull tape shall be a polyester tape (Fibertek Part No. WP1250, NEPTCO Part No. WP1250P, or approved equal). The tape shall have the following properties:

- 1250 lb (567 kg) tensile strength
- flat, not round, construction
- printed foot markings
- pre-lubricated for reduced pulling tension at start of cable pull
- low susceptibility to absorption of moisture; moisture resistant

Detectable pull tape shall consist of a single 24 AWG copper wire with polyethylene or PVC jacket woven into a polyester tape (Fibertek Part No. WPT1250, NEPTCO Part No. DP1250P, or approved equal). The tape shall have the following properties:

- 1250 lbs. (567 kg) tensile strength
- flat, not round, construction
- printed foot markings
- pre-lubricated for reduced pulling tension at start of cable pull
- low susceptibility to absorption of moisture; moisture resistant
- corrosion resistant embedded conductor

B. INSTALLATION

Install pull tape, by hand pulling, blowing, or via vacuum method, into each empty conduit and innerduct and empty cell within a multi-cell conduit during conduit installation. Install the pull tape after conduit testing has been completed. Install and secure 5 ft (1.5 m) of slacked pull tape in each empty conduit or cell at each vault. Secure the pull tape by tying it to the duct plug for the conduit in which it is installed.

682.2.10 DUCT PLUGS

Install blank duct plugs in each empty conduit that enters an ECB, pull box, hub, or building entrance. The plug shall be sized to fit the conduit in which it is used and shall provide a watertight and airtight seal by use of mechanical expansion. No sealants or caulks shall be used. The duct plug shall have inner rings to which pull tape can be tied. All metallic components shall be stainless steel.

Install a fiber optic innerduct plug in each conduit that enters an ECB, pull box, hub, or building entrance and has a cable installed in it. The plug shall be sized to fit the conduit and cable with which it is used and shall be a split plug with a bushing assembly for sealing around the cable by mechanical compression. All metallic components shall be stainless steel.

Install a multi-conduit duct plug in each conduit that enters an ECB, pullbox, hub, or building entrance and has one or more innerducts installed in it. The plug shall be sized to fit the outer conduit and the innerducts with which it is used and shall have split holes for each innerduct with a bushing assembly for sealing around the innerducts by mechanical compression. Seal unused innerduct holes with the appropriate plug or solid bushing. All metallic components shall be stainless steel.

Install a multi-cable duct plug in each conduit that enters an ECB, pullbox, hub, or building entrance and has two or more cables installed in it. The plug shall be sized to fit the outer conduit and the cables (with appropriately-sized split bushings) with which it is used and shall have split holes for each cable with an overall bushing assembly for sealing around the cable bushings by mechanical compression. Where the conduit is 4-inch I.D. or greater, use a multi-cable duct plug with a minimum of four cable holes. Seal unused cable holes with the appropriate plug or solid bushing. All metallic components shall be stainless steel.

682.2.11 CONDUIT DETECTION WIRE

A. MATERIAL

Conduit detection wire shall be #10 AWG stranded green-insulated THWN or THHN-THWN conductor.

B. INSTALLATION

Install one conduit detection wire in the trench during conduit installation, directly below the conduit or at the same level as the conduit. All conduit installed by use of directional boring shall include the installation of a conduit detection wire. The conduit detection wire shall be pulled with, but not in, the bored conduit. If more than one conduit is being installed in a single bore, only one conduit detection wire shall be required.

When conduit detection wire installation is required in existing conduit, install one conduit detection wire in the existing conduit or in one of the existing innerducts.

The conduit detection wire shall be continuous and unspliced between pull boxes or vaults and shall enter the pull boxes or vaults at the same location as the conduit with which it is installed. Coil and secure 5 ft (1.5 m) of conduit detection wire in each pull box or vault.

C. TESTING

Perform a continuity or tone test after installation to confirm that a continuous run of conduit detection wire was installed between pull boxes or vaults. For conduit detection wire installed in a trench, test the conduit detection wire after backfilling, compaction, and ECB installation is complete. For conduit detection wire installed in a trench with full-depth conduit backfill, test the conduit detection wire before and after backfilling. The purpose of this test is to document that no damage or separation of the conduit detection wire has occurred during the installation of wire, backfilling of the trench, or ECB installation.

Prepare a test plan, supplying equipment, conducting the test and documenting the results. Submit a test plan at least 15 working days prior to the desired testing date. Testing shall not begin until the Engineer has approved the test plan, and all tests shall be conducted in the presence of the Engineer.

682.2.12 CONDUIT TESTING

Test every conduit after the conduit is installed and before cable or pull tape is installed. Perform testing on all conduit types in this Specification, including but not limited to each cell of multi-cell conduit, each conduit in duct banks, and each innerduct. All testing shall be performed using the procedures and mandrel size recommended by the conduit

manufacturer. Testing shall be performed in the presence of the Engineer. Payment for all testing is included in CONSTRUCTION COMPLETE.

682.2.13 ELECTRICAL COMMUNICATION BOX

Design electrical communication box and cover in accordance with ASTM C-857-95. Ensure that the walls, floor, and roof be minimum 6 in. thicknesses. Form electrical communication box from 4500 psi concrete in accordance with Section 830. Manufacture and install the electrical communication box in accordance with Details which include the dimensions associated with each type of electrical communication box. Seal all joints and seams in the electrical communication boxes created from manufacture or final assembly with manufacturer-approved sealant.

Form electrical communication box with one (1) knockout window and three (3) conduit terminators for conduit, nonmetal, type 3, 2 in. on each wall of the electrical communication box as shown in the Details. The knockout window shall remain sealed unless used for conduit duct bank termination. Provide 1 in. to 1.5 in. separation between conduit terminators. Install conduit into terminators as shown in Plans and seal with manufacturer-approved sealant.

Install two (2) cable racks, minimum 54 in. in length, on each wall of the electrical communication box as shown in the Details. Install cable racks directly to the wall or use the shortest standoff bracket possible. Include cable support arms, 7 in. to 9 in. in length, with plastic or ceramic insulators with each rack. Install one (1) cable support arm per rack for each cable installed plus one (1) cable support arm per rack as spare. Manufacture all cable racks, cable support arms, and mounting/fastening hardware of hot-dipped galvanized steel.

Install electrical communication box on a 12 in. layer of compacted coarse aggregate. Terminate conduit duct banks as shown in the Details. Prior to grouting, compact backfill for the entire length of trench to within 10 ft. of the electrical communication box. Bundle conduit, as shown on conduit duct bank installation Details, with cable ties, wire, or duct tape. Secure and align individual conduits of conduit duct bank with conduit alignment jigs, ensuring that the conduits enter the electrical communication box level, straight, and perpendicular to the wall. Construct conduit alignment jigs of plywood or use conduit spacers in accordance with Section 682. Allow grout around individual conduits of conduit duct bank to set prior to final backfilling and paving around the electrical communication box. Do not use concrete for any backfill around the electrical communication box or the conduit approaches to the electrical communication box within 10 ft.

Install electrical communication boxes in the shoulder lane whenever possible, unless shown otherwise in the Plans. In the case of narrow shoulder lanes where the electrical communication box extends beyond the edge of pavement, backfill to the top of the electrical communication box. Never install any portion of the electrical communication box in the travel lane.

Electrical communication box covers shall be imprinted with “GEORGIA DOT COMMUNICATIONS”.

682.2.14 ELECTRICAL COMMUNICATION BOX REHABILITATION

Establish the location of the electrical communication box, recognizing that pavement may have been placed over the cover of the electrical communication box.

Open the cover of the electrical communication box which may include the use of power tools to accomplish and the removal of pavement.

Remove existing fiber optic cable coils temporarily ensuring no kinks or abrasions are made to the fiber optic cable.

Clean the interior of the electrical communication box and remove any debris, trash, mud, silt, and water.

Reseal all joints and seams in the electrical communication box with silicone sealant, type A as specified in Section 833.2.06.

Install two (2) cable racks per wall for inside wall widths greater than or equal to 36 in. Install one (1) rack per wall for inside wall widths less than 36 in. but greater or equal to 24 in. Install no racks for inside wall widths less than 24 in. Cable rack height shall be equal to inside height of the electrical communication box minus 6 in. Install cable racks such that the bottom of the cable rack is no greater than 3 in. from the bottom of the electrical communication box. Install cable

racks such that the distance between successive racks and the electrical communication box corners is equal to the extent permitted by the presence of knockout windows and/or conduit terminators. Install cable racks directly to the wall or use the shortest standoff bracket possible. Include cable support arms, 7 in. to 9 in. in length, with plastic or ceramic insulators with each rack. Install one (1) cable support arm per rack for each cable previously installed or being installed as part of the project plus one (1) cable support arm per rack as spare. Manufacture all cable racks, cable support arms, and mounting/fastening hardware of hot-dipped galvanized steel.

Re-set the electrical communication box and cover assembly such that the cover is at the elevation of the paved shoulder lane. Install class A concrete HES and 2 in. of 12.5 mm superpave or concrete surface to match existing paved shoulder.

Label any unlabeled fiber optic cables in accordance with labeling requirements set forth in Section 935.

If a suitable unused conduit terminator does not exist and a conduit is being terminated into an existing electrical communication box, neatly core conduit entry hole in electrical communication box wall and seal around conduit with silicone sealant or grout as necessary to prevent soil and/or water intrusion into the electrical communication box.

Add the following to Subsection 682.3.05:

A. Multi-Cell Conduit System

Secure from the manufacturer or supplier of the multi-cell system and provide to the Department complete and comprehensive written installation manuals for the complete system. At the start of the multi-cell installation, have the manufacturer or supplier provide technical assistance, as needed. At any time during the construction process, ensure that the manufacturer or supplier provides technical assistance to the Contractor and/or the Department.

For multi-cell conduit system installation under bridges, only fiberglass or steel multi-cell conduit systems shall be used. Install expansion and deflection joints according to the multi-cell conduit system manufacturer's and support hanger manufacturer's recommendations. Steel couplings shall be securely tightened; fiberglass coupling shall be epoxied. Ensure that during the construction process and at the request of the Department, the multi-cell conduit system or support hanger manufacturer provides on-site technical assistance at no additional cost to the Department.

B. Continuous Flexible Conduit

Whenever possible, conduits shall be placed in continuous manufactured lengths without coupling.

Conduit shall be placed in the straightest orientation possible, reducing bends, rises, and waves. Conduits shall be held in place during backfilling when necessary to keep straight. Where field conditions require the trench to change direction and bends are necessary, the bends shall be formed in the with the trench and should be smooth and gentle and shall not have less than a 4 foot radius (as measured to the inside surface of the conduit)

Delete Subsection 682.4 and substitute the following:

No items shall be measured separately

Multi-cell conduit system, innerduct, conduit duct bank, fiberglass conduit, and conduit nonmetal type 3 will not be measured separately for payment. Work shall include, but not limited to cutting asphalt or concrete, trenching, installing, backfilling trench, restoring asphalt or concrete, drilling existing concrete shoulder, installing #4 rebar, replacement of existing transverse joint material, directional boring, and testing of multi-cell conduit system, innerduct, conduit duct bank, conduit nonmetal type 3, fiberglass conduit, marking tape, pull tape, duct plugs, and conduit detection wire shall be included in the overall cost of the multi-cell conduit system, innerduct, conduit duct bank, fiberglass conduit, and conduit nonmetal type 3.

Conduit detection wire installed in existing conduit will not be measured separately for payment.

Conduit, nonmetal, type 2 – power service will be not be measured separately for payment. No separate measurement will be made for type 2 pull boxes, electrical junction boxes, electrical wire, directional bores, transformers, pavement repair, or any other required materials.

Electrical communication box, type ____ will not be measured separately for payment. No separate measurement will be made for, cable racks, cable support arms, compacted backfill material, compacted coarse aggregate, pavement removal, or pavement installation.

Electrical communication box rehabilitation will not be measured separately for payment by the electrical communication box that was rehabilitated as previously defined. No separate measurement will be made for cable racks, cable support arms, pavement removal, or pavement installation.

Delete Subsection 682.5 and substitute the following:

Payment for all items shall be made under CONSTRUCTION COMPLETE.

Georgia Department of Transportation

State of Georgia

Special Provision

PROJECT NO.: CSMSL-0008-00(690) CHATHAM

P.I. NO.: 0008690

Section 865—Manufacture of Prestressed Concrete Bridge Members

Delete Subsection 865.1 and substitute the following:

This section includes the following requirements for precast-prestressed concrete bridge members and piling using High Performance Portland cement concrete as shown in the Plans:

- Manufacturing
- Inspecting
- Testing
- Marking
- Painting
- Rubbing as specified
- Plant handling
- Storing
- Shipping

The term "precast-prestressed concrete" is referred to as "prestressed concrete" in the rest of this Section.

Add the following to Subsection 865.2:

Material	Section
Concrete, Class AAA HPC	500

Add the following to the end of Subsection 865.2.01.B.7.a.6:

Optional Method of Curing for Release Strengths with HPC: Temperature match curing ("Sure Cure" or equivalent methods) is allowed for specimens used to determine when stress may be transferred to the concrete for High Performance Concrete Units.

March 29, 2007
Revised: August 19, 2011
(Design Build)

DEPARTMENT OF TRANSPORTATION
STATE OF GEORGIA

SPECIAL PROVISION

PROJECT: CSMSL-0008-00(690)
P.I. No.: 0008690
CHATHAM COUNTY

Section 935 - Fiber Optic System

Delete Section 935 and substitute the following:

Section 935 – Fiber Optic System

935.1 General Description

This work includes the installation of fiber optic cable and equipment including but not limited to cable, interconnect, patch cords, FDC interconnect cables/pig tails, any cable related hardware, connectors, splices, closures, temporary systems, testing, training, or any other fiber optic product as specified on the Plans, or noted in any other Section of these Specifications.

Provide all equipment and materials of like kind and function to be of the exact same manufacture, model, revision, firmware, etc.

Provide all equipment, materials, and work in accordance with all manufacturers' recommendations.

935.1.01 Definitions

Not applicable

935.1.02 Related References

A. Georgia Standard Specifications

Section 150 – Traffic Control

Section 639 – Strain Poles for Overhead Sign and Signal Assemblies

Section 647– Traffic Signal Installation

Section 682 – Electrical Wire, Cable, and Conduit

B. Referenced Documents

Optical Fiber Standards

- EIA/TIA-492AAAA-A, "Detail Specification for 62.5 μm Core Diameter/125 μm Cladding Diameter Class IA Graded Index Multimode Optical Fibers", Current Edition
- EIA/TIA 492CAAB, “Detail Specification for Class IVa Dispersion-Unshifted Single-mode Optical Fibers with Low Water Peak”, Current Edition
- ITU-T G.652D, “Transmission Media Characteristics, Recommendations G.650-G.659”, for single-mode fibers
- Telcordia GR-20-CORE, “Generic Requirements for Optical Fiber and Cable, Current Edition

Fiber Optic Cable and Component Standards

- Telcordia GR-20-CORE, “Generic Requirements for Optical Fiber and Cable, Current Edition
- EIA/TIA-598-B.3, “Optical Fiber Cabling Components Standard”, Current Edition
- EIA/TIA-598-B, “Optical Fiber Cable Color Coding Standard”, Current Edition
- RUS 7 CFR 1755.900, “United States Department of Agriculture Rural Utilities Service (RUS) Standard 7 CFR 1755.900”, Current Edition
- Telcordia GR-326 Issue 3, “Generic Requirements for Single-mode Optical Fiber Connectors”, Current Edition
- EIA/TIA-604-XX, “Fiber Optic Connector Intermateability Standards (FOCIS)”, where XX specifies the fiber optic connector type (i.e., ST, SC, LC, etc.), Current Edition
- National Electrical Code Section 770

Fiber Optic Installation Standards and Practices

- Building Industry Consulting Service International (BICSI) Telecommunications Distribution Methods Manual (TDMM), Current Edition
- BICSI Customer-owned Outside Plant Methods Manual , Current Edition
- Society of Cable Telecommunications Engineers (SCTE), “Recommended Practices for Optical Fiber Construction and Testing”, Current Edition
- OSHA Regulations (Standards-29 CFR) 1910, “Occupational Safety and Health Administration Standards
- ANSI/IEEE C2 National Electrical Safety Code
- ANSI/NFPA-70 National Electrical Code

Fiber Optic Measurement and Testing Standards

- EIA Standard FOP-II, Test Condition 1
- Telcordia GR-196-CORE (Issue 2), “Generic Requirements for Optical Time Domain Reflectometer (OTDR) – Type Equipment”, Current Edition
- Applicable Flame Tests: UL 1581 and UL 1666 (Non-Plenum Applications)
- Applicable Flame Test UL 910 (NFPA 262-2002) (Plenum Applications)
- EIA/TIA-526-X, “Standard Test Procedures for Fiber Optic Systems”, Current Edition

  EIA/TIA-526-7 (OFSTP-7), “Optical Power Loss Measurements for Installed Single-mode Fiber Cable Plant”

EIA/TIA-526-14-A (OFSTP-14A), "Optical Power Loss Measurements for Installed Multimode Fiber Cable Plant"

935.1.03 Submittals

Prior to any work, obtain approval from the Engineer for the products and procedures to be used on the Project.

The following chart provides the Contractor with an outline of the submittal requirements for the equipment and components for this pay item. This chart is to be used as a guide and does not relieve the Contractor from submitting additional information to form a complete submittal package.

Section 935 Submittal Requirements											
Material	Specification Reference	Catalog Cuts	Mfg. Spec.	Factory Test	Materials Cert.	Lab. Test Reports	Install. Proced.	Test Schedule	Test Plan	Test Reports	Submittal Due Date (Cal. Days after NTP)
F.O. Cable (OSP&IP)	935.2.A,B,&C	X	X	X	X	X	X	X	X	X	60 Days
Patch Cords & FDC Interconnect Cables/Pig Tails	935.2.D	X	X	X		X			X		60 Days
Drop Cable	935.2.E	X	X	X		X			X		60 Days
F.O. Connectors	935.2.F	X	X	X		X					60 Days
Splice Closure	935.2.G&H	X	X	X		X	X		X		60 Days
Mech. Lab Splice	935.2.I	X	X								60 Days
FDC	935.2.J	X	X	X		X	X		X		60 Days
Transceivers	935.2.K	X	X	X		X	X		X		60 Days
Splice Procedures	935.1.03C						X				60 Days
Traning Plan	935.3.08						X	X	X	X	60 Days

Submit submittal data for all equipment, materials, test procedures, and routine maintenance procedures required for these items within 60 calendar days after the Notice To Proceed and prior to any installation, unless noted otherwise in the Contract Documents.

Submit to the Engineer for approval, six (6) copies of the manufacturer's descriptive literature (catalog cuts), technical data, operational documentation, service and maintenance documentation and all other materials required within these specifications.

Provide submittal data that is neat, legible, and orderly. Neatly organize each package of submittal data and separate by hardware item. Use the "Materials Certification Package Index and Transmittal Form", contained in Section 105.02 of the Special Provisions, for each pay item to document and list all material and components that are included in the submittal package. Any submittal data submitted without the Index/Transmittal form or that is incomplete will be rejected.

A. Cable Certification

Prior to installing any fiber optic cable on the Project, obtain approval for the cable type, cable manufacturer, fiber content, design and installation procedure from the Engineer. Request approval by submitting catalog cuts and factory specifications for the fiber optic cable.

B. Aerial and Underground Splice Closures:

Provide certification from an independent testing laboratory that certifies that the splice closures conform to the specifications and test procedures.

C. Splicing Procedures

Submit for Department approval the procedure to be used for the splicing of all cables on this project. Within the submittal documents include the proposed process, cleave tool and the specific fusion splicer to be used.

D. Fiber Distribution Center (FDC)

With the submittal data for the pre-terminated FDC (subsection 935.2.J), provide two complete samples of each size and type required in the project. Provide a minimum of 20 feet (6 m) of drop cable with each pre-terminated FDC; any type and manufacture of drop cable is permitted in the sample as long as the cable contains at least as many fibers as the pre-terminated FDC size. For each sample, provide factory test documentation as required in 935.3.06.E.

E. Training

Prior to training, submit resume and references of instructor(s) to Engineer for approval. The instructor shall be qualified in his/her respective field as determined by the Engineer. Submit an outline of the training course and a training plan within 120 days of the Contract Notice to Proceed for approval by the Engineer. Explain in the Training Plan in detail the contents of the course and the time schedule of when the training shall be given. Coordinate actual training with installation schedules as approved by the Engineer.

F. Fiber Optic Test Documentation

Provide the date, time and location of any tests required by this specification (see 935.3.06) to the Engineer at least 72 hours before performing the test. Provide two copies of documentation of the test results to the Engineer within 5 working days of completion of the test for review and approval, or else retest the represented fiber optic cable and provide the documentation within 5 working days of the retest. Bind the test documentation and include the following:

1. OTDR Set-Up: Cable & Fiber Identification

- Cable ID
- Cable Location - begin and end point
- End-to-end cable length in kilometers calculated from cable markings
- Fiber ID, including tube and fiber color
- Operator Name
- Date & Time

2. OTDR Test Parameters: Information to be recorded on each trace

- Wavelength
- Pulse width
- Refractory index
- Range
- Scale

3. Test Results

a. OTDR Test

- Total Fiber Trace distance in kilometers
- Splice Loss attenuation in dB per km
- Events > 0.01 dB

- Trace analysis detailing all events exceeding 0.01 dB

The Contractor shall provide OTDR traces meeting Telcordia GR-196-CORE (Issue 2) data format requirements. With advance approval by the Engineer, the Contractor use an alternative format, provided the Contractor provides the Department with a licensed copy of the software at no additional cost to the or Department.

Provide all traces on a diskette to the Engineer.

At a minimum, the data shall include: cable ID, fiber number, buffer tube, FDC port, fiber distance, test wave length, attenuation in dB per km. The data requirements for each project will be provided through the Engineer.

b. Power Meter End – To – End Attenuation Test

This test is to be performed on each fiber link using test procedures described in document EIA/TIA 526 sections 7 & 14A.

- Length, number and type of splices and connectors
- Link attenuation
- The data shall be provided to the Engineer in Excel or compatible spreadsheet form and on a floppy diskette

G. As-Built Documentation

Submit as built documentation of all work provided in accordance with this specification prior to Contract final acceptance. Include in the as-built documents the following documents as a minimum as they are applicable. Supply manuals and wiring diagrams at the time of installation. Deliver as-builts no later than 30 days after completion of installation or as otherwise specified in the Plans or Specifications. Provide complete and accepted as-builts, which shall be reviewed and approved by the Department prior to any final acceptance or payment.

1. Operator's Manual

Furnish a manual containing detailed operating instructions for each different type of equipment.

2. Maintenance Procedures Manuals

Furnish a manufacturer's manual containing detailed preventative and corrective maintenance procedures for each different type or model of equipment.

3. System Connection Diagrams

Furnish diagrams showing fiber optic and electric system interconnection cables and terminations. Include a diagram showing the location of all equipment in the new equipment racks or frames in hubs.

4. As Built Drawings

Provide the Department with drawings that detail the final installation route of all cable. Show all routes and locations of the final cable installation in-place and complete. For aerial cable installations show poles, pole attachment heights, spans, co-locations, splice closures, maintenance/storage coils, and vertical risers. For underground cable installations show conduit size, quantity and routes, pull boxes and ECBs, closures, and cabinet terminations. Provide as-build drawings showing the final location of new CCTV and VDS support poles, new utility poles, new equipment cabinets, detection systems, CMS, and ramp meter support poles. Provide the cable distance marking documentation required in 935.3.05.G.2.

Except for standard bound materials, bind all 8.5"x11" documentation, including 11" x 17" drawings folded to 8.5"x11", in logical groupings in loose-leaf binders of either the 3-ring or plastic slide-ring type. Permanently and appropriately label each such bound grouping of documentation.

Furnish at least five (5) copies of all bound documentation.

935.2 Materials

All fiber optic parts, materials, components and equipment furnished and installed on this contract shall be consistent and compliant with the latest version or edition of the standards and industry practices specified in Section 935.1.02.B. If a conflict of difference exists between the requirements contained in the specified standards and practices and the requirements contained in these Specifications, then the Contractor shall use the most stringent material requirement for this contract. The Contractor shall notify the Engineer of any such conflicts or differences prior to procurement of materials and components.

A. Fiber Optic Cable

Ensure that all fiber optic related products conform to this specification. Install, apply, inspect, and use those products in accordance with the manufacturer's standard operating and installation procedures and this Specification.

Use only fiber optic cable that meets the following requirements:

Ensure that the optical fiber used in both outside and inside plant cable conforms to the requirements specified herein as well as the industry standards and practices listed in Section 935.1.02.

All fiber optic cable on this project shall be from a currently ISO9001 certified manufacturer who is regularly engaged in the production of this material using the processes noted within this Specification. All outside plant fiber optic cable used on each individual project shall be from only one manufacturer and manufacturer production batch.

Use only cable that is new (manufacturerd no more than eight months prior to the project Notice to Proceed) and of current design and manufacture.

Ensure that multimode optical fiber used in cables meets EIA/TIA-492AAAA-A, "Detail Specification for 62.5 μm Core Diameter/125 μm Cladding Diameter Class IA Multimode, Graded Index Optical Waveguide Fibers," Current Edition and conforms to the requirements for multimode optical fiber in the Optical Fiber Specification Table in this Specification.

Ensure that single mode optical fiber used in cables meets EIA/TIA 492CAAB, "Detail Specification for Class IVa Dispersion-Unshifted Single-mode Optical Fibers with Low Water Peak", Current Edition, and ITU-T G.652D, "Transmission Media Characteristics, Recommendations G.650-G.659", for single-mode fibers

For hybrid cables, make the single mode fibers the first fibers in the count as specified in EIA/TIA-598-B, "Color Coding of Fiber Optic Cables."

Ensure that all optical fibers in the cable are usable fibers.

The fiber optic cable type, configuration, and installation method will be detailed on the Plans, Drawings, Details, Specifications and in the pay items. The cable and cable installation shall conform to all requirements within the Plans and Specifications.

B. Outside Plant (OSP) Cable

This section sets forth the general standards for fabrication and design of outside plant fiber optic cable.

1. OSP Cable Construction

a. General Requirements: OSP cable shall be an accepted product of the United States Department of Agriculture Rural Utilities Service (RUS) as meeting the requirements of 7 CFR 1755.900.

Only use optical fibers that are placed inside a loose buffer tube.

b. Buffer Tubes: Ensure each buffer tube contains 12 fibers for all fiber optic cables unless specified otherwise. The fibers cannot adhere to the inside of the buffer tube.

Use only buffer tubes filled with a non-hygroscopic, non-nutritive to fungus, electrically non-conductive, homogenous gel. The gel shall be free from dirt and foreign matter and readily removable with conventional non-toxic solvents.

Apply binders with sufficient tension to secure the buffer tubes to the central member without crushing the buffer tubes. Use only binders that are non-hygroscopic, non-wicking (or rendered so by the flooding compound), and dielectric with low shrinkage.

c. Cable Core: Protect the cable core with a water blocking material. The water blocking material shall be non-nutritive to fungus, electrically non-conductive and homogenous.

d. Strength Members: Use a central anti-buckling member consisting of a glass reinforced plastic rod to prevent buckling of the cable.

Use high tensile strength aramid, fiberglass, or a combination of aramid and fiberglass yarns to provide tensile strength. Fillers or rods may be included in the cable core to lend symmetry to the cable cross-section where needed.

e. Color : Distinguish each fiber and buffer from others by means of color coding according to the following:

1. Blue	5. Slate	9. Yellow
2. Orange	6. White	10. Violet
3. Green	7. Red	11. Rose
4. Brown	8. Black	12. Aqua

Ensure these colors meet EIA/TIA-598-B, "Color Coding of Fiber Optic Cable."

For cables containing more than 12 buffer tubes, use the color code shown above for tubes 1 through 12, and use stripes or tracers in conjunction with the standard color code for tubes 13 through 24.

The colors shall be stable during temperature cycling and not subject to fading or smearing onto each other or into the gel filling material. Ensure colors do not cause fibers to stick together.

f. Cable Jacket: Include in the cable at least one ripcord under the sheath for easy sheath removal.

Helically strand the high tensile strength yarns evenly around the cable core.

Sheath all dielectric cables with medium density polyethylene. The minimum nominal jacket thickness shall be 0.06 in (1.5 mm). Apply jacketing material directly over the tensile strength members and water-blocking compound. The polyethylene shall contain carbon black to provide ultraviolet light protection and cannot promote the growth of fungus.

Ensure that the jacket or sheath to be free of holes, splits, and blisters.

Ensure that the cable jacket contains no metal elements and is of a consistent thickness.

g. Marking: Mark cable jackets using the following template, unless otherwise shown in the Plans:

Manufacturer’s Name - Optical Cable - Year - Telephone Handset Symbol – GA DOT - Description

Where the Description conforms to the following depending on cable type:

- Multimode Cable: XXF MM
- Single-Mode Cable: XXF SM
- Hybrid Cable: XXF SM / XXF MM

XX denotes the fiber count

Mark the cable length every meter, every 2 ft if marking the cable in English units. Ensure the actual length of the cable to be within -0/+1% of the length markings.

Use cable marking that is contrasting in color to the cable jacket. The height of the marking shall be approximately 0.10 in (2.5 mm).

2. Additional Requirements for Loose Tube Cable

Use only cable that is all dielectric, loose tube design. Ensure buffer tubes are stranded around a central member using the reverse oscillation, or "SZ", stranding process.

3. Cable Performance

All OSP cable shall meet or exceed the requirements of the Fiber Optic Test Procedure (FOTP) criteria referenced in 7 CFR 1755.900. Upon the request of the Department, provide certification from an independent testing laboratory that certifies that the cable conforms to the specifications and test procedures.

a. Pulling Tension: Ensure that the cable can withstand a maximum pulling tension of 600 lbf (2.7 kN) during installation (short term) and 200 lbf (890 N) long term installed.

b. Temperature Range: Provide only OSP cable with shipping, storage, and operating temperature range of -40 °F to +160 ° F (-40 °C to +71 °C). The installation temperature range of the cable shall be -20 °F to +160 °F (-30 °C to +71 °C).

C. Inside Plant (IP) Cable

This section sets forth the general standards for fabrication and design of inside plant fiber optic cable.

1. IP Cable Construction

a. Strength Members: For the strength member, use a high modulus U.S. manufactured aramid yarn. The aramid yarns shall be helically stranded around the buffered fibers. Ensure that non-toxic, non-irritant talc is applied to the yarn to allow the yarns to be easily separated from the fibers and the jacket. For all IP cables used in plenum structures, use only IP cable that meets NEC UL-910 requirements for plenum rated cables.

b. Cable Jacket: Ensure the jacket to be continuous, free from pinholes, splits, blisters, or other imperfections. The jacket shall be smooth, as is consistent with the best commercial practice. The jacket should provide the cable with a tough, flexible, protective coating, able to withstand the stresses expected in installation and service.

Use orange cable jackets for multi-mode and yellow cable jackets for single mode.

Design the cable jacket for easy removal without damage to the optical fibers by incorporating a ripcord under each cable jacket. Ensure that a non-toxic, non-irritant talc is applied to the aramid/fiberglass yarns to allow the yarns to be easily separated from the fibers and the jacket.

Ensure that the nominal thickness of the cable outer jacket is sufficient to provide adequate cable protection while meeting the mechanical, flammability, and environmental test requirements of this document over the life of the cable.

c. Color: Use color coded individual fibers for identification. The color coding shall be in accordance with EIA/TIA-598-B “Optical Fiber Cable Color Coding” as stated in 935.2.B.1.e. Use coloring material that is stable over the temperature range of the cable, is not susceptible to migration, and does not affect the transmission characteristics of the optical fibers. Use color coded buffered fibers that will not adhere to one another. When grouping fibers into individual units, number each unit on the sub-unit jacket for identification. Repeat the number approximately every 6.0 in (150 mm).

d. Marking: Mark the outer cable jacket at least every 3 ft (1 m) with the manufacturer's name or UL file number, date of manufacture, fiber type, flame rating, UL symbol, and sequential length marking (e.g. "62.5/125 MICRON Type OFNR - UL"). Use print color that contrasts to the color of the jacket and is permanent and legible for the life of the cable.

2. Construction by Cable Type

a. Interconnect Cables: Use interconnect cable to connect the distribution panels of a fiber optic cable plant with the actual electronic devices. The cross connect system requires either one or two fiber cable or cordage dependent upon the electronic connector requirement. Construct interconnect cable by surrounding the 900 μm tight buffered fibers with layered U.S. manufactured aramid yarns and a jacket of PVC or Copolymer depending on NEC requirements. Use the aramid yarns as tensile strength members. The cordage shall be allowed in one fiber simplex, two fiber duplex (round) or two fiber ZIP cordage.

b. FDC Interconnect Cable: Use this cable to splice a factory connectorized multifiber pigtail cable on to an OSP cable end, routing that cable within an FDC and its splice cabinet, and connecting to the termination panels of the FDC. Construct FDC interconnect cable of 900 μm tight buffered fiber (single mode or multi-mode optical fiber) surrounded with U.S. manufactured aramid fibers, and jacketed with flame retardant jacket material. Ensure that the optical fiber is proof tested to 100 kpsi (690 MPa) and that it meets all the optical fiber requirements of this Specification. Ensure that the factory-installed connectorization meets all requirements of this Specification. Match the fiber count and buffer tube configuration of the FDC interconnect cable to be exactly equivalent to the OSP cable being terminated in the FDC, unless additional fibers (using other buffer tube colors) are required for an FDC that is larger than the OP cable. Use an orange exterior jacket for the FDC interconnect cable for multi-mode and a yellow exterior jacket for single-mode. Label FDC interconnect cables exactly as for the OP cable when the FDC interconnect cable must be routed to the exterior of the FDC and its splice cabinet.

c. For cables with less than 8 fibers: Use fibers that are stranded around a U.S. manufactured aramid yarn central member and surrounded by layered U.S. manufactured aramid yarns. Use aramid yarns to serve as the tensile strength member of the cable. Apply a ripcord between the aramid yarns and the outer jacket to facilitate jacket removal. The outer jacket shall be extruded over the aramid yarns for physical and environmental protection.

d. For cables with 8 up to 24 fibers: Use cables that have individual fibers stranded around a glass reinforced plastic (GRP) central member and surrounded by layered U.S. manufactured aramid yarns. The GRP central member provides anti-buckling to ensure consistent attenuation performance across the operating temperature range of the cable. Apply a ripcord between the aramid yarns and the outer jacket to facilitate jacket removal. The outer jacket shall be extruded over the aramid yarns for physical and environmental protection

e. For cables with 24 to 72 fibers: Group together the buffered fibers in six-fiber sub-units. In each sub-unit, strand the individual fibers around a U.S. manufactured aramid yarn central member and surround the sub-unit by layered aramid yarns. Incorporate a ripcord in the sub-unit design to facilitate access to the individual fibers. The sub-unit jacket shall be extruded over the aramid yarns for additional physical and environmental protection. Strand the sub-units around a GRP central member. The GRP central member provides anti-buckling to assure consistent attenuation performance across the operating temperature range of the cable. Insert a ripcord beneath the outer jacket to facilitate jacket removal. The outer jacket shall be extruded around the units for physical and environmental protection.

f. For cables with more than 72 fibers: Group together the buffered fibers in twelve fiber sub-units. In each sub-unit, strand the individual fibers around a dielectric central member and surround the sub-unit by layered aramid yarns. Incorporate a ripcord in the sub-unit design to facilitate access to the individual fibers. The sub-unit jacket shall be extruded over the aramid yarns for additional physical and environmental protection. The sub-units may be stranded around a dielectric central member. Insert a ripcord beneath the outer jacket to facilitate jacket removal. The outer jacket shall be extruded around the units for physical and environmental protection.

3. Temperature Range

Ensure that the storage temperature range for the cable on the original shipping reel to be -40° F to +160° F (-40 °C to +71 ° C). The operating temperature range for riser cables shall be 0 °F to +160 °F (-18 °C to +71 °C). The operating temperature range for plenum cables shall be 32° F to +160° F (0 °C to 71 °C).

4. Crush Resistance Requirements

Ensure that the cable can withstand a minimum compressive load of 0.061 plf (0.89 N/m) applied uniformly over the length of the compressive plate. Use only cable that has been tested in accordance with FOTP-41, “Compressive Loading Resistance of Fiber Optic Cables.” While under the compressive load, the fibers shall not experience an attenuation change of greater than 0.4 dB at 1550 nm for single-mode or greater than 0.6 dB at 1300 nm for multimode. After the compressive load is removed, the fibers shall not experience an attenuation change greater than 0.2 dB at 1550 nm for single-mode or greater than 0.4 dB at 1300 nm for multimode.

5. Impact Resistance Requirements

Use only cable that can withstand a minimum of 20 impact cycles. Use only cable that has been tested in accordance with FOTP-25, “Repeated Impact Testing of Fiber Optic Cables and Cable Assemblies.” The fibers shall not experience an attenuation change greater than 0.2 dB at 1550 nm for single-mode or greater than 0.4 dB at 1300 nm for multimode.

6. Flammability

Use only cables that are UL-listed in accordance with NEC, Article 770. Riser cables (OFNR) shall pass UL-1666. Plenum cables (OFNP) shall pass UL-910.

D. Patch Cords and FDC Interconnect Cables/ Pig Tails

1. Patch Cords

Use patch cords consisting of a length of fiber optic cable terminated on both ends. For all IP cables used in plenum structures, use only IP cable that meets NEC UL-910 requirements for plenum rated cables.

a. Construction: Ensure that all factory preconnectorized assemblies adhere to the applicable cable, cordage, and fiber specifications stated in these Specifications.

All inside plant (IP) patch cords shall meet NEC jacketing requirements.

Use orange outer jackets for multimode and yellow jackets for single mode.

Use connector boots of two (2) colors for all duplex patch cords, zip cord or round. Use white or off white for one leg of the duplex cord (non-printed zip leg) and red for the opposite leg (printed zip leg) of the duplex cord.

For all assemblies for outside plant (OSP) where loose tube is used, include a fan-out kit installed at each connectorized end.

Ensure that all connectors conform to Subsection 935.3.04.A.

No splices of any type are allowed within a patch cord assembly.

b. Testing: Fully test each assembly and place those test results on a test tag for each mated pair of connectors. Attach the tag to one end of each pair within the assembly.

Individually package each assembly within a plastic bag and clearly mark on the outside of that bag the submitted manufacturer's part number.

2. Factory Connectorized FDC Interconnect Cables/Pig Tails

Use FDC interconnect cables/pig tails that consist of a length of fiber optic cable of one single fiber terminated on one end. Use only FDC interconnect cables/pig tails with factory installed connectors in accordance with Subsection 935.2.F. Provide FDC interconnect cables/pig tails with 900 micron tubing or 3 mm fan out tubing as required for the application. Use FDC interconnect cables/pig tails with 900 micron tubing only when fully enclosed within an FDC. Ensure that the other end of the cable is properly prepared for splicing to another cable. The FDC interconnect cable/pig tail shall conform to the same construction and testing requirements as patch cords.

E. Drop Cable Assembly – Outside Plant

Drop cable assembly is defined as a connectorized fiber optic cable (drop cable) and appropriate fan out (if required) used for connectivity between a primary fiber trunk or feeder cable and field devices such as signal controllers, closed circuit television cameras, video detection system cameras, changeable message signs, etc.

1. General Requirements

Provide a loose tube design drop cable in the drop cable assembly meeting the requirements for outside plant cable as specified in Subsection 935.2.B. Provide the drop cable assembly type (multimode, single-mode or hybrid) and fiber count specified in the Plans.

2. Assembly Construction

Provide a drop cable assembly as specified in the Plans and meeting the following requirements. Use only drop cables that are factory pre-terminated, that use splice-on factory-connectorized pigtails/FDC interconnect cables, or are included in pre-terminated FDCs. For factory pre-terminated drop cable assemblies, label each individual fiber with its drop cable fiber number (“1,” “2,” etc.) on a self-laminating clear overwrapping label on the fan-out tubing within 2 in. (50 mm) of the terminating fiber connector.

a. Pre-terminated Drop Cable Assembly: Install pre-terminated drop cable assemblies with loose tube design fiber optic cable, factory-installed fiber optic connectors in accordance with Subsection 935.2.F on each drop cable fiber, and factory-assembled fan outs with 3 mm fan out tubing. Use metallic crimps between the drop cable strength members and the fan out tubing strength members, and use heat-shrink tubing seals.

b. Field-spliced Drop Cable Assembly: Install field-spliced drop cable assemblies with loose tube design fiber optic cable, fusion spliced factory-connectorized pigtails/FDC interconnect cables, in accordance with Subsection 935.2.D and Subsection 935.2.F on each drop cable fiber.

c. Fan Out - Loose Tube Cable Design: Install field-installed fan outs with 3 mm fan out tubing in accordance with Subsection 935.3.05.J. Additionally, secure the fan out tubing to the main cable sheath in a hard epoxy plug transition that extends a minimum of 2.0 in (50 mm) onto the cable and 2.0 in (50 mm) onto the 3 mm tubing.

F. Fiber Optic Connectors

Furnish and install ST compatible connectors unless otherwise specified, except furnish and install LC compatible connections to optical interfaces on network and field switches. Use ceramic ferrule ultra polish connectors (UPC) for single-mode and multi-mode applications for all connector types. Install connectors as per manufacturer application and recommendations, including proper termination to the outer-tubing (900 micron tubing, 3 mm fan out tubing, etc.) required for the application.

Use UPC connectors rated for an operating temperature of -40 °F to +167 °F (-40 °C to +75 °C).

Use only factory-installed UPC connectors for all applications except where shown in the Plans for specifically permitted applications in accordance with 935.2.E.2. Use factory-installed UPC connectors installed with a thermal-set heat-cured epoxy and machine polished mating face. Do not use field-installed fiber optic connectors.

Where barrel couplers are used in passive termination applications such as FDCs, use only ST compatible ceramic-insert couplers. Use only manufacturer recommended single-mode couplers for single-mode connector applications. Provide dust caps for both sides of couplers at all times until permanent connector installation.

Provide connectors listed below that do not exceed the maximum loss listed for each connector.

Connector Type	Installation	Max. Loss	Typical Loss	Optical Return Loss
Multimode	Factory	0.50 dB	N/A	N/A
Single-mode	Factory	0.50 dB	0.25 dB	>55 dB

G. Splice Closure - Underground

1. Use

Install closures designed for use under the most severe conditions such as moisture, vibration, impact, cable stress and flex temperature extremes. Splice closures shall pass the factory test procedures and minimum specifications listed below:

2. Physical Requirements

Use a cylindrical closure or rectangular dome type closure with cable entry at one end only and a sealed one-piece high-density polyethylene dome body.

Splice closures shall be suitable for ECB or pull box applications as shown in the Plans..

Ensure that the closure prevents the intrusion of water without the use of encapsulate.

Ensure that the closure’s cable entry end has a flexible thermoplastic rubber end seal with pre-template cable ports.

The closure size shown in the Plans specifies the number of splices to be accommodated by the closure. With the closure, provide all materials to accommodate the number of splices specified by the closure size, including splice tray, storage, and organizing materials.

Provide a closure that is capable of accommodating splice organizer trays that accept mechanical, fusion, or multi-fiber array splices. Use a splice closure that has provisions for storing fiber splices in an orderly manner, mountings for splice organizer assemblies, and space for excess or non-spliced fiber. Use splice organizers that are re-enterable and resealable.

Use only UL rated splice cases. Where high fiber count (144 to 432) splice cases are required, use cases that have an external pressurization port for optional pressurization.

Verify that closure re-entry and subsequent reassemble does not require specialized tools or equipment. Further, these operations cannot require the use of additional parts.

Provide a splice closure with provisions for controlling the fiber bend radius to a minimum of 1.5 in (38 mm).

All closures up to the 48-fiber size as shown in the Plans shall have maximum dimensions of 6.5 in. (165 mm) diameter and 23 in. (580 mm) length and shall provide entry of at least four cables of at least 0.75 in. (19 mm) diameter. These closures shall allow for the storage and express of at least 12 unopened buffer tubes when configured for any number of splices up to 48.

All closures above the 48-fiber size and up to the 144-fiber size as shown in the Plans shall have maximum dimensions of 8.5 in. (216 mm) diameter and 30 in. (760 mm) length and shall provide entry of at least four cables of at least 1.0 in. (25 mm) diameter and at least two additional cables of at least 0.75 in. (19 mm) diameter. These closures shall allow for the storage and express of at least 24 unopened buffer tubes when configured for any number of splices up to 144.

3. Quality Assurance Requirements

Install only underground splice closures that pass the following factory testing:

a. Compression Test: Provide a closure that does not deform more than 10% in its largest cross-sectional dimension when subjected to a uniformly distributed load of 300 lbf (1.3 kN) at a temperature of 0 °F and 100 °F (-18 °C and 38 °C). Perform the test after stabilizing at the required temperature for a minimum of two hours. Place an assembled closure between two flat paralleled surfaces, with the longest closure dimension parallel to the surfaces. Place the weight on the upper surface for a minimum of 15 minutes. Take the measurement with weight in place.

b. Impact Test: Provide an assembled closure capable of withstanding an impact of 21 ft-lb (28 N•m) at temperatures of 10 °F and 100 °F (-12 °C and 38 °C). Perform the test after stabilizing the closure at the required temperature for a minimum of 2 hours. The test fixture shall consist of 20 lb (10 kg) cylindrical steel impacting head with a 2 in (50 mm) spherical radius at the point where it contacts the closure. Drop it from a height of 12 in (0.30 mm). Ensure that the closure does not exhibit any cracks or fractures to the housing that would preclude it from passing the water immersion test. There shall be no permanent deformation to the original diameter or characteristic vertical dimension by more than 5%.

c. Cable Gripping and Sealing Testing: The cable gripping and sealing hardware shall not cause an increase in fiber attenuation in excess of 0.05 dB/fiber at 1550 nm when attached to the cables and the closure assembly. Test by measuring six fibers, one from each buffer tube or channel, or randomly selected in the case of a single fiber bundle. Take measurements from the test fibers, before and after assembly to determine the effects of the cable gripping and sealing hardware on the optical transmission of the fibers.

d. Vibration Test: Provide splice organizers that securely hold the fiber splices and store the excess fiber. Use fiber splice organizers and splice retaining hardware tested per EIA Standard FOP-II, Test Condition I. The individual fibers shall not show an increase in attenuation in excess of 0.1 dB/fiber.

e. Water Immersion Test: Provide a closure capable of preventing a 10 ft (3 m) water head from intruding into the splice compartment for a period of 7 days. Ensure that testing of the splice closure has been accomplished by the placing of the closure into a pressure vessel and filling the vessel with tap water to cover the closure. Apply continuous pressure to the vessel to maintain a hydrostatic head equivalent to 10 ft (3 m) on the closure and cable. Continue this process for 7 days. Remove the closure and open to check for the presence of water. Any intrusion of water in the compartment containing the splices constitutes a failure.

H. Splice Closure - Aerial

1. Use

Design the closure for use in aerial applications and to conform to the requirements below:

2. Physical Requirements

Use a cylindrical closure or rectangular dome type closure with cable entry at one end only and a sealed one-piece high-density polyethylene dome body.

Design the closure for free breathing splice protection without the use of encapsulate.

Provide a closure with fully assembled weather tight closure design.

Ensure that the closure's cable entry end has a flexible thermoplastic rubber end seal with pre-template cable ports.

The closure shall have corrosion resistant aluminum or stainless steel hardware. Design the aerial closure in such a way as to allow complete splice access after closure placement, without removal of the closure or electrical bonds from the cable. The closure shall be suitable for straight, butt or branch splices. Include provisions for strain relief, both around the cable jacket and to internal cable strength members. The aerial closure design shall eliminate the need for drip collars and sealing collars. Package the closure with all necessary hardware for aerial mounting.

The closure size shown in the Plans specifies the number of splices to be accommodated by the closure. With the closure, provide all materials to accommodate the number of splices specified by the closure size, including splice tray, storage, and organizing materials.

All closures up to the 48-fiber size as shown in the Plans shall have maximum dimensions of 6.5 in. (165 mm) diameter and 23 in. (580 mm) length and shall provide entry of at least four cables of at least 0.75 in. (19 mm) diameter. These closures shall allow for the storage and express of at least eight unopened buffer tubes when configured for any number of splices up to 48.

All closures above the 48-fiber size and up to the 144-fiber size as shown in the Plans shall have maximum dimensions of 8.5 in. (216 mm) diameter and 30 in. (760 mm) length and shall provide entry of at least four cables of at least 1.0 in. (25 mm) diameter and at least two additional cables of at least 0.75 in. (19 mm) diameter. These closures shall allow for the storage and express of at least 12 unopened buffer tubes when configured for any number of splices up to 144.

3. Optical Fiber Organizer

The fiber organizer is a system that holds splice or organizer trays in such a way as to protect and support cable splices within an environmentally protected area. Provide organizer trays capable of storing all common splices; fusion and mechanical, in all configurations; butt, inline and branch (with up to four branch cables). All trays shall be completely re-enterable. Provide only trays able to accept both multi-mode or single mode fibers. The organizer itself shall accept a minimum of four trays, and offer bonding and grounding hardware. The organizer shall offer a simple one piece cable strapping system.

I. Mechanical Lab Splice

Insertion Loss:

Multi-Mode < 0.30 dB

Single Mode < 0.30 dB

Operating Temperature:

-23 °F to 77 °F (-31 °C to 25 °C)

J. Fiber Distribution Center (FDC)

Use rack-mount, wall-mount, or pre-terminated FDCs as specified in the Plans. Use rack-mount, wall-mount, or pre-terminated FDCs in all field cabinets, including all types of ITS and traffic signal cabinets, unless specifically excepted in the Plans.

Use rack-mount and wall-mount FDCs and FDC splice cabinets with enclosures and mounting components of metallic construction. Use FDC interconnect cable for all OP cable terminations in rack-mount and wall-mount FDCs unless otherwise specified in the Plans.

Use rack-mount FDCs that fit standard 19 inch EIA equipment racks or cabinets.

Use rack-mount FDCs of specified sizes 6-fiber through 24-fiber that have front-opening swing-out drawers for access to the fiber splicing trays and the fiber termination couplers. When closed, the swing-out drawer shall provide a dust-tight seal that completely encloses the fiber splicing trays, fiber termination couplers, and the connecting ends of fiber patch cords connected to the couplers.

Use rack-mount FDCs of specified sizes 36-fiber through 96-fiber that have fixed-mounted front-facing fiber termination couplers accessible behind a removable transparent plastic dust cover.

Use rack-mount FDCs of specified sizes 6-fiber through 48-fiber that include fiber splicing trays integral to the FDC enclosure, accessible through the rear of the FDC or through the swing-out drawer. Use rack-mount FDCs of specified sizes 6-fiber through 24-fiber with a maximum horizontal depth of 14 in (0.35 m) and 30-fiber through 48-fiber with a maximum horizontal depth of 24 in (0.61 m) and of the following maximum vertical heights:

- 6-fiber and 12-fiber: 1.75 in (44.5 mm)
- 24-fiber: 3.50 in (88.9 mm)
- 36-fiber and 48-fiber: 7.00 in (178 mm)

Use rack-mount FDCs of specified sizes 60-fiber through 144-fiber that include a separate FDC splice cabinet installed adjacent to the FDC. Alternately, rack-mount FDCs with splice cabinets integral to the overall FDC enclosure but contained in a separated compartment either above or below the FDC termination couplers. Use rack-mount FDCs of specified sizes 60-fiber through 144-fiber with a maximum horizontal depth of 24 in (0.61 m) and of the following maximum vertical height, combined FDC and FDC splice cabinet of 17.50 in (445 mm).

Provide rack-mount and wall-mount FDCs with the appropriate quantity of couplers, panels, splice trays, organizers, factory-connectorized pigtails/FDC interconnect cables, and ancillary materials to terminate the number of fibers as specified by the FDC size, regardless of the cable size to be terminated as shown in the plans. Use only FDC interconnect cables for FDCs 30-fiber and larger. Where factory pre-terminated drop cable assemblies are permitted and to be used, do not provide splice trays.

Use Type A pre-terminated FDCs that are factory manufactured assemblies of fiber optic drop cable with factory-installed fiber connectors and integral ruggedized fiber connector enclosures. Use Type A pre-terminated FDCs of the sizes specified in the Plans. Use fiber optic drop cable in accordance with 935.2.B and 935.2.E. Use fiber optic connectors in accordance with 935.2.F. The size of the pre-terminated FDC is defined by the number of fibers in the drop cable, all of which shall be connectorized. Use ruggedized fiber connector enclosures of thermally stable rigid plastic housings fully potted with a thermally stable epoxy filling that encapsulates the drop cable fan out, fibers and connector bodies. Use permanent labels on the enclosure with contrasting color to identify each connector body by its associated fiber number. Provide a unique serial number permanently attached on each pre-terminated FDC. Provide a non-metallic cable strain-relief boot where the drop cable enters the fiber connector enclosure and that secures the cable and to the enclosure; the strain-relief boot shall fully encircle the cable for a minimum of 2 inches (51 mm) from the enclosure's outer surface. Use fiber connector enclosures that are no more than 2 inches (51 mm) wide and deep (the maximum dimension of the enclosure plus fiber connector body). Use 4 fiber and 6 fiber enclosures that are no more than 11 inches(280 mm) long and 12 fiber enclosures that are no more than 14 inches (356 mm) long. All fiber connectors shall be arranged on one of the long (vertical) faces of the enclosure. Provide an 0.125 in. (3.175 mm) thick aluminum mounting plate that secures to the fiber connector enclosure. The mounting plate shall have at least four mounting holes near the plate's corners that permit horizontal or vertical mounting flush to a panel, and are spaced appropriately for vertical mounting to an EIA equipment rack rail using two of the mounting holes.

For FDCs of all types, provide couplers with dust caps in accordance 935.2.F. Use only ST compatible couplers unless otherwise specified.

K. Transceivers

1. External Transceiver

Provide external transceivers that meet the following requirements:

- Daisy chained, linear multi-drop configuration.
- Asynchronous, full duplex RS 232 communication.
- Meet NEMA TS-1-1989 (R1994, R2000, R2005) environmental standards for power interruption, temperature and humidity, power service transients, non-destruct transients, vibration and shock. Conformance with equivalent environmental standards by other entities may be submitted for consideration.
- External, female ST connectors with T1, R1, T2, R2 ports for fiber connection.
- External female DB-25, DB-9, or terminal block RS 232 connector.
- External indicator LEDs for power, transmit & receive (each channel).
- Multimode transceiver operates at 1300 nm (minimum 14 dB power budget).
- Single mode transceiver operates at 1310 nm (minimum 21 dB power budget).
- Receiver dynamic range that is a minimum of 2 dB greater than the manufacturer's specified power budget. The transceiver shall fully maintain all operational performance characteristics throughout the full receiver dynamic range, including a 0 dB path loss.
- Anti-streaming communications.
- Single mode transmitter units incorporate laser diode optical emitters.
- Internal, nickel-cadmium trickle charge battery for a minimum of six (6) hour backup operation. The battery shall be designed to have minimized degradation to reliability during extended periods of trickle charge operation. Use corrosion resistant battery contacts.
- Metal housing with maximum dimensions of 8" x 5" x 2" (200 mm x 130 mm x 50 mm). The metal housing shall have flanged mounting brackets to allow for permanent mounting with screws.

Do not use internal card-type units in field devices, such as traffic signal controllers, CCTV system controllers, and changeable message sign controllers.

Provide external transceivers in the control center or communications hub that meet the additional following requirements:

- Permanently rack mounted within a card cage with a self-contained rack power supply
- Card cage shall be provided per project requirements.

2. External Star Transceiver

Provide an RS232 data optical star transceiver meeting all requirements of the external transceiver in Subsection 935.2.K.1 with the following modifications:

The star transceiver shall be designed for multi-drop configuration with three optical data ports and one electrical equipment data connection port, to be applied in a drop-and-repeat optical three-way to "T" installation.

Verify that the star transceiver is fully compatible and operable with the linear drop-and-repeat transceiver specified in Subsection 935.2.K.1.

Do not include internal battery for backup operation.

L. Fiber Optic Snowshoes

Use fiber optic snowshoes that are factory-manufactured fiber optic cable storage brackets designed for aerial installation on messenger wire cable support spans. Provide fiber optic snowshoes constructed with aluminum or plastic bodies that maintain a minimum of an 8 inch (203 mm) cable bending radius and have integral cable lashing strap slots or holes for secure cable attachment to the storage bracket. Ensure that plastic snowshoe components are 100% carbon filled for resistance to UV exposure. Provide a minimum of two stainless steel or hot-dipped galvanized span wire mounting clamps for attachment.

935.2.02 Delivery, Storage, and Handling

Package the cable for shipment on reels. Each package shall contain only one continuous length of cable. Construct the packaging so as to prevent damage to the cable during shipping and handling.

Seal both ends of the cable to prevent the ingress of moisture.

Include with each reel a weatherproof reel tag attached identifying the reel and cable that can be used by the manufacturer to trace the manufacturing history of the cable and the fiber.

Include with each cable a cable data sheet containing the following information:

- Manufacturer name
- Cable part number
- Factory order number
- Cable length
- Factory measured attenuation of each fiber
- Bandwidth specification (where applicable)
- Index of refraction

When the length of an order requires a reel greater than 3 ft (0.9 m) in diameter, apply a protective coating around the cable before shipment. Cover the cable with a thermal wrap. Securely fasten the outer end of the cable to the reel head so as to prevent the cable from becoming loose in transit. Project the inner end of the cable a minimum of 6.5 ft (2.0 m) into a slot in the side of the reel or into a housing on the inner slot of the drum, in such a manner to make it available for testing.

Plainly mark each reel to indicate the direction in which it is to be rolled to prevent loosening of the cable on the reel.

935.3 Construction Requirements

All fiber optic parts, materials, components and equipment installed on this contract shall be consistent and compliant with the latest version or edition of the standards and industry practices specified in Section 935.1.02.B. If a conflict of difference exists between the requirements contained in the specified standards and practices and the requirements contained in these Specifications, then the Contractor shall use the most stringent material requirement for this contract. The Contractor shall notify the Engineer of any such conflicts or differences prior to procurement of materials and components.

935.3.01 Personnel

A. Section deleted

935.3.02 Equipment

Furnish a portable fiber optic light source and power meter test set for testing the fiber optic cable. Provide a test set matched, calibrated and referenced to work as a synchronized test system. Include 850 and 1300 nm light sources by LED and 1300 and 1550 nm light source by laser. Provide a power meter capable of measuring the optical loss from all of the above sources.

Provide a power meter capable of a resolution of at least 0.1 dB and a power range of at least +10 to –60 dB. Provide connectors and adapters for ST and duplex SC connectors. The light sources and power meter shall be capable of 120 VAC line power or rechargeable battery power. Provide a portable battery-operated printer for direct reports of test measurements, and provide PC software for uploading and storing test measurements on a computer. Provide protective padded carrying cases for all test set components, including test cables and adapters. Include complete instruction and training in the use of the test set in the training required in Subsection 935.3.08. This equipment shall remain the property of the Contractor.

935.3.03 Preparation

Not applicable

935.3.04 Fabrication

A. Fiber Optic Connectors

Furnish and install connectors with ceramic ferrules, with the fibers permanently secured within the ferrule with epoxy, heat set or air dried, as specified by the connector manufacturer.

Install connectors according to the manufacturers recommended practice.

935.3.05 Construction

A. OSP and IP Cable Installation

Submit for approval a detailed construction and installation procedure (SOP) covering all aspects of the construction and installation process for each and all specific cable to be used on this project. Secure from the cable manufacturer the construction and installation procedures to be used on the project. The SOP shall be submitted for review by the Engineer. Maintain traffic control that adheres to Section 150 of the Georgia Standard Specifications.

B. Cable Installation Procedures and Standards

1. Safety Precautions

Follow all appropriate OSHA and industry standards related to safety when working in manholes or underground vaults and when handling optical fibers.

2. Cable Handling

Install all fiber optic cable according to the manufacturer’s recommended procedures and these specifications.

3. Pulling Tension

Do not exceed the maximum recommended pulling tension during installation as specified by the cable manufacturer.

4. Allowable Bend Radius

Do not violate the minimum recommended bend radius during installation as specified by the cable manufacturer. Unless the manufacturer’s recommendations are more stringent, use the following guidelines for minimum bend radius:

20 X Cable Diameter	Short Term - During Installation
10 X Cable Diameter	Long Term - Installed

5. Cable Installation Guidelines

Before the installation begins, carefully inspect the cable reels for imperfections such as nails that might cause damage to the cable as it is unreeled.

Take all necessary precautions to protect reeled cable from vandals or other sources of possible damage while unattended. Any damage to the cable sections may require replacement of the entire section.

Whenever unreeled cable is placed on the pavement or surface above a manhole, provide means of preventing vehicular or pedestrian traffic through the area in accordance with Section 150 of the Specifications.

Use the "figure-eight" cable lay configuration to prevent kinking or twisting when the cable is unreeled or backfed. Do not coil fiber optic cable in a continuous direction except for lengths of 100 ft (30 m) or less. The preferred size for the "figure-eight" is 15 ft (5 m) in length, with each loop 5 ft to 8 ft (1.5 m to 2.4 m) in diameter. When "figure-eighting" cable, exercise care to relieve pressure on the cable at the crossover of the eight. This may be done by placing cardboard shims at the crossover or by forming a second "figure-eight".

Keep the cable continuous throughout the pull. Cable breaks are allowed only at designated splice points.

Where messenger cable is required, as shown in the Plans, lash aerial fiber optic cable to a steel strand wire messenger cable of the size specified in the plans that conforms to Georgia Standard Specification 915.02.

6. Cable End Sealing

Where a cable ends without termination in a fiber optic closure, seal the end of the cable by re-using a cable end cap that is shipped with a cable reel. Use a cap that is size-matched to the cable to be sealed. Clean the end of the cable. Partly fill the cap with a waterproof silicone adhesive sealant and press the cap fully onto the cable end, rotating the cap to fully encapsulate the cable end with the sealant in the cap. Apply a full sealant bead between the end of the cap and the cable jacket.

C. Cable Storage

At designated intervals throughout the cable plant, pull and store excess cable for slack for future terminations or splicing.

1. Cable Storage Requirements - Underground (OSP) & IP

Unless otherwise noted on the plans, the following are the requirements for cable storage for underground and IP applications:

- Pull Box – (Types 4, 4S, 5, 5S, 6, and 7) Apply the following storage requirements for the indicated cable/closure situations.
    - Drop cable with no closure – 10 ft. (3 m)
    - One or more trunk cables with no closure – 110 ft. (34 m) of each cable
    - Two or more trunk cables with one closure – store 55 ft. (17 m) of each trunk cable so that the closure can be removed from the pull box approximately 55 ft. (17 m). If a drop cable is spliced to the trunk cable at this point, store 55 ft. (17 m) of each drop cable.
    - One trunk cable with one closure – 110 ft. (34 m) Install closure in the center of the 110 ft. (34 m) cable loop, so that the closure can be removed from the ECB approximately 55 ft. (17 m). If a drop cable is spliced to the trunk cable at this point, store 55 ft. (17 m) of each drop cable.
    - One trunk cable with one closure and trunk cable ends – 95 ft (30 m). Install closure on the trunk cable at 55 ft (17 m) from the pull box. If a drop cable is spliced to the trunk cable at this point, store 55 ft (17 m) of each drop cable.
    - Trunk cable ends with no closure – 95 ft. (30 m)

  Hub Building *(interior)* – Do not store slack cable inside the hub building.

  Hub Building (exterior adjacent ECBs) – 180 ft (55 m)

- Traffic Control Center & Transportation Management Center (OSP splice vault) – 65 ft (20 m)
- Traffic Control Center & Transportation Management Center (IP at equipment room) – cable entrance to distribution panel bay plus 20 ft (6 m)

- Electrical Communication Box (ECB) - (Types 3, 4, 5, and 6) Apply the following storage requirements for the indicated cable/closure situations. More than one situation may occur in a single electrical communication box, in which case apply each appropriate requirement.
    - Trunk cable with no closure – 110 ft (34 m)
    - Trunk cable with one closure – 110 ft (34 m). Measure the storage amount from the top of the ECB manhole opening. Install closure in the center of the 110 ft (34 m) cable loop, so that the closure can be removed from the ECB approximately 55 ft (17 m). If a drop cable(s) is spliced to the trunk cable at this point, store 55 ft (17 m) of each drop cable.
    - Trunk cable with one closure and trunk cable ends – 95 ft (30 m). Install closure at 55 ft (17 m) from the ECB on the trunk cable. If a drop cable(s) is spliced to the trunk cable at this point, store 55 ft (17 m) of each drop cable.
    - Trunk cable ends with no closure – 95 ft (30 m)

2. Minimum Cable Storage Requirements - Aerial Applications

Unless otherwise noted on the plans, the following are the minimum requirements for cable storage for aerial applications:

Install a minimum 150 ft (45 m) storage loop approximately one half the distance between every equipment drop or as shown in the Plans. Where equipment drops are greater than 1000 ft (300 m) apart, install a minimum 150 ft (45 m) storage loop for every 1000 ft (300 m)of uninterrupted cable length.

At aerial splice closures, install 75 ft. (23 m) of drop cable storage and 150 ft. (45 m) of trunk cable storage, unless otherwise noted in the Plans, to allow the fully assembled closure, including the trunk cable and drop cable, to be lowered to ground level for maintenance purposes.

3. Cable Storage

Properly store all cable to minimize susceptibility to damage. Maintain proper bend radius, both short and long term, during cable storage.

a. Communication and Pull Boxes: Store the excess or slack cable in the pull box or communication box in accordance with the Plans details.

b. Hub/TMC/TCC: Properly store the cable in cable troughs and plenum applications which meet NEC requirements.

c. Aerial Installations: Store the excess or slack cable at storage loops in a “bow tie” configuration on the messenger strand using two fiber optic snowshoes (aerial fiber cable storage brackets) that maintain the proper bend radius in the fiber cable. Install one fiber optic snowshoe for drop cable and trunk cable storage at aerial splice closures to maintain the proper bend radius in the fiber optic cable.

D. Cable Splicing

Splice together each individual reel of fiber optic cable that makes up the continuous length of installed cable called for on this Project. Splice cable only at splice points designated on the plans. Make no splices within a patch cord assembly or drop cable.

E. Mid Span/Drop Access

At points where mid span/drop access is required, keep all fibers intact except those that are being accessed for the equipment drop. Use a suitable tool for removing fibers from the buffer tube to prevent damage to the fibers that will remain intact.

F. Connector Termination Procedures

Only use procedures for the termination of the connectors that meet the process set out in that connector manufacturer's standard operating procedure (SOP) for the field installation.

G. Cable Marking

1. Materials

Use 2-1/2" (63.5 mm) wide, 4" (100 mm) long, wrap-around type cable markers suitable for underground and aerial use. Use UV stabilized marker material and printing inks to provide an aerial durability of at least five years.

Print text in bold black type on orange or yellow PVC markers, as specified in Section 935.3.05.G.2. Use base material that is minimum 0.015" (0.38 mm) thickness PVC. Pre-print the following text, or alternate text shown in the Plans, legibly on markers used for all cables:

Cable ID: XXXXXXX
GA DOT
Optical Cable

Where XXXXXXX is the appropriate cable ID as defined in the Plans. Print the text specified above twice on every cable marker with the text of the second image reversed and abutting the first image. The end result shall be text which "reads right" when either short edge of the cable marker is held horizontally upright.

2. Installation

Clean the installed cable of all dirt and grease before applying any marker. Follow the marker manufacturer's recommended procedure for applying cable markers. Mark all cables in or at every communications hub, electrical communications box, pull box, handhole, equipment cabinet, aerial or underground splice closure, pole attachment, aerial storage bracket, and pole conduit riser entrance. At every trunk cable termination, reel end-to-reel end splice, electrical communications box, pull box, handhole, equipment cabinet, aerial splice closure, and aerial storage bracket, record the cable distance markings from the printline for the cable entry and exit, along with the exact location by Station Number or location name. Record the cable distance markings in a tabular format approved by the Engineer or on a documentation form provided by the Department.

Place cable markers in the following locations:

- within 18 in (460 mm) of every cable entry to a pull box, handhole, ECB and hub building
- within 6 in (150 mm) of every cable entry or termination in an equipment cabinet
- within 18 in (460 mm) of every splice closure at cable entry points
- within 6 in (150 mm) of every FDC or splice cabinet in a hub building in which a cable terminates or enters
- every 20 ft (6 m) for the length of a cable in maintenance coils in electrical communications boxes or pull boxes
- within 12 in (0.30 m) of every pole attachment, aerial storage bracket, and pole conduit riser entrance

Use orange markers at all locations, except as noted below:

- Where a trunk cable enters and leaves a closure (mid-span cable entry or end-to-end splice), use orange markers for one leg of the trunk cable and yellow for the other leg, placing corresponding color labels at the closure end of a leg and at the conduit entrance (underground installation) or span attachment (aerial installation).
- Where two drop cables terminate in a closure, use orange markers for one drop cable and yellow markers for the other drop cable, throughout the entire drop cable's length to its other termination.

H. Fusion Splicing

1. Use

Unless otherwise noted, fusion splice all fiber optic splices.

2. Procedure

Fusion splicing consists of aligning the cores of two clean, cleaved fibers or a group of such fibers and fusing the ends together with an electric arc. Position the fiber ends under a microscope or a high-resolution video monitor and then align them using precision movement micro-positioners. High-voltage electrodes contained in the splicer conduct an arc across the fiber ends as the fibers are moved together, thus fusing the fibers together. Verify maximum core alignment prior to splicing and estimate splice loss after the fusion process by the use of light injection and detection devices or profile alignment algorithms.

Install all splice enclosures according to the manufacturer's recommended guidelines.

3. Splice Protection

Adequately protect all fusion splices in splice trays or organizers in an enclosure. When splicing inside a building, use a splice center where rack or wall space is available.

Provide the splice with strain relief and protection of the stripped fiber splice in a manner recommended by the splice tray or organizer manufacturer. Use splice types compatible with the tray design.

Protect fusion splices with a heat shrink tubing that protects the splice and extends over the fiber coating. No bare fiber may be exposed.

I. Mechanical Splicing

1. Use

Do not use mechanical splices for any purpose other than a temporary connection to fiber optic test equipment.

2. Procedure

Make all mechanical splices of the strain relief/locking type requiring no adhesive or polishing of the fiber ends. Ensure the fibers are self-aligning upon the closing of the mechanical splice. The splices shall have the capability of splicing multi-mode or single mode fiber, and with any combination of buffer coating (250 μm and 900 μm). The splice shall be of one piece construction. Ensure that there is no stress on the fiber in the alignment area.

Install all splice closures according to the manufacturer's recommended guidelines.

3. Lab Splice

Use a mechanical fiber optic lab splice when a temporary joining of two fibers is required, such as in the testing of non-terminated fiber. These splices may be used on single mode or multi-mode optical fiber. Ensure the lab splice is re-usable for up to 50 matings. The lab splice shall accommodate optical fibers with cladding diameters between 120 and 145 μm.

J. Splice Closures

Install splice closures according to all manufacturers' recommendations. Install splice closures where shown in the Plans and in the approximate center of fiber cable storage coils..All splice closures mounted in ECBs or pull boxes shall be securely mounted to cable rack hooks or mounting brackets.

K. Fiber Optic Cable Fan Out

1. Inside Plant

Provide all inside plant cable with a fan out in accordance with the manufacturer's recommended guidelines. In protected environments such as a splice case, protect the fiber with a minimum 900 μm jacket. In all other instances, protect the fiber with 3 mm fan out tubing. Install only connectors meeting the requirements for connectors set forth in Subsections 935.3.04.A and 935.2.F.

2. Outside Plant

Up-jacket individual 250 or 900 micron fibers to 3 mm using fan out tubing. Include in the fan out tubing aramid yarn strength members and an outer protective jacket. The individual leg length shall be 3 ft +/- 2 in (0.9 m +/- 50 mm).

L. Temporary Fiber Optic Cable

Furnish and install one continuous temporary fiber optic cable system as shown in the Plans. Terminate the cable and patch cords as required in the Plans, splice the cable along cable route at the points indicated in the Plans.

M. External Transceivers

Shelf mount external transceivers in a manner that does not restrict the replacement of other components in the cabinet housing. In Type 170 traffic cabinets mount the transceiver on an aluminum shelf permanently attached to the EIA 19" cabinet rack in the rear of the cabinet.

N. Fiber Distribution Center (FDC)

Do not install mechanical splices or field installed connectors. Equip unused panel slots with blank panels. Provide inter-cabinet and inter-bay bend radius and jumper management on each side of the FDC. Install all hardware according to the manufacturer's recommended procedures and Department standards. Determine specific hardware sizing from the project documents.

For rack-mount and wall-mount FDCs, array connectors in a vertical pattern with number one being at the top left position.

Prior to manufacture of pre-terminated FDCs, verify the final installed location of all portions of each drop cable route from the splice closure to the equipment cabinet (including but not limited to the cabinet location, all conduit and pullboxes, and the splice closure location) to determine the required length of drop cable, including all splice closure and storage coils, to be factory manufactured with each FDC. In Type A Equipment Cabinets, mount pre-terminated FDCs on the side panel in a vertical position, as shown in the equipment cabinet details. Mount the pre-terminated FDCs with the connectors horizontal or facing downward, and route the drop cable up or down as necessary. Route and secure the drop cable beside or behind the cabinet side panel such that it is fully strain-relieved, does not violate the manufacturer's recommended bending radius, and does not interfere with the operation of or access to any cabinet equipment or electrical components.

935.3.06 Quality Acceptance

A. Underground Splice Closures

Ensure that an independent testing laboratory has performed all tests described in Subsection 935.2.G. Provide certification from an independent testing laboratory as required in Subsection 935.3.1.

B. Fiber Optic Cable

1. Installation Test

Test the fiber optic cabling installed on this project according to the fiber's assigned use as shown in the plans and as defined below:

- Terminated Fibers: terminated fibers are defined as fibers that are terminated on both ends, providing an end-to-end link from the hub to a device or between devices

- Spare Fibers: spare fibers are defined as fibers not being connected with this project to a device and that may be terminated at one end and stored at the other end, or stored at both ends. Spare fibers may or may not be spliced through two or more different trunk cables.

Upon completion of the cable installation, splicing, and termination, and a minimum of fourteen days before equipment hookup, test all terminated fibers and spare fibers for continuity, events above 0.10 dB, and total attenuation of the cable. In the event that fiber optic cable installed on this project is connected to existing fiber optic cable, perform installation testing on both terminated fibers and spare fibers of the new cable and existing fibers to which the new fibers are spliced or connected. Submit both printed and electronic (diskette) OTDR traces as specified in Subsection 935.1.03. Submit copies of the cable distance marking documentation as required in 935.3.05.G.2.

2. Test Requirements

a. OTDR Test: For all single mode and multi-mode fiber links, test and document the installation using OTDR testing.

A certified technician shall conduct the installation test using an optical time domain reflectometer (OTDR) and optical source/power meter. The technician is directed to conduct the test using the standard operating procedure as defined by the manufacturer of the test equipment. The OTDR to be used shall be capable of performing standard OTDR functions, including the ability to display individual loss/gain in dB per km, as well as display all 2-point dB loss cursors to allow isolating and viewing any and all points along a given fiber distance.

Use a factory patch cord of a length equal to the "dead zone" of the OTDR to connect the OTDR and the cable. Optionally, the Technician can use a factory "fiber box" of 325 ft (100 m) minimum with no splices within the box.

Conduct the tests at 1300 nm for multimode cable and at 1310/1550 nm for single mode cable.

b. Attenuation Test: For all single mode and multi-mode fiber links, test and document attenuation by a standard power-meter test.

For every fiber installed or connected to under this Contract, perform end-to-end attenuation test. For the test, use a calibrated optical source and power meter using the standard three-stage procedure. Determine acceptable link attenuation by the cumulative value of standard losses based on length, number and type of splices and connectors.

3. Fiber Optic Cable Acceptance

Use the following criteria for acceptance of the cable:

Provide test results demonstrating that the dB/km loss does not exceed +3% of the factory test or 1% of the cable's published production loss. Consider the error rate for the test equipment in the test.

No event can exceed 0.10 dB. If any event is detected above 0.10 dB, replace or repair that event point.

The total dB loss of the cable, less events, cannot exceed the manufacturer's production specifications as follows:

Cable Type	Max. Attenuation dB/km	Test Wavelength
Singlemode	0.30	1550 nm
	0.40	1310 nm
Multimode	1.0	1300 nm

If the total loss exceeds these specifications, replace or repair that cable run and assume all expenses, both labor and materials. Elevated attenuation due to exceeding the pulling tension during installation will require the replacement of the cable run at no expense to the Department for either labor or materials.

NOTE: The Department may allow the "bi-directional/averaging" process of OTDR testing, particularly when splice losses are being unfavorably affected by "mode field diameter misalignment," "core off-set" or "core misalignment."

C. Fusion Splicing

Ensure that the maximum splice loss for any fusion splice does not exceed 0.10 dB.

D. Mechanical Splicing

Ensure that the maximum splice loss for mechanical splices does not exceed 0.70 dB.

E. Fiber Distribution Center (FDC)

Test all completed and assembled pre-terminated FDCs at the point of manufacture and provide two copies of the manufacturer test documentation. Test each connecterized fiber in the pre-terminated FDC to demonstrate compliance with all requirements for cables and connectors as detailed in other subsections of these specifications. Include in the test documentation the location station number where the FDC is to be installed, the serial number of the pre-terminated FDC, the

drop cable footage markings at each end of the drop cable, and the total drop cable distance. Place one copy of the manufacturer test documentation in the equipment cabinet drawer where the pre-terminated FDC is installed, and submit the other copy to the Engineer.

935.3.07 Contractor Warranty and Maintenance

Provide a Manufacturer support (usual and customary warranties) period for all fiber optic cable materials furnished and installed as part of the fiber cable system. Include in warranty and support all contractor or manufacturer activities related to maintenance, removal and replacement of cabling, closures and other fiber optic system materials during the period of support. Begin the Manufacturer warranty support period upon successful completion of the Fiber Optic Quality Acceptance testing as outlined in Subsection of 935.3.06. All Manufacturer warranties shall be continuous throughout the period and state that they are subject to transfer to the Department.

935.3.08 Training

Provide both installation and maintenance training on fiber optic cable to selected Department personnel. Personnel trained by the manufacturer of the fiber optic cable furnished on this project and authorized by said manufacturer shall perform the training. Furnish a training notebook in a labeled 3-ring binder to each trainee.

Provide a location to hold the courses that is an acceptable indoor and comfortable location near the project area. If requesting that the training be conducted away from the project area, pay all costs associated with travel and accommodation of all students.

Provide installation and maintenance training for up to eight (8) people. Include in this training both classroom training and hands-on training. All training shall be conducted in half-day sessions. Two half-day sessions may be held on the same day. The training will consist of classroom instruction and field training applications. The contractor shall provide and schedule training at least 5 working days prior to fiber cable being installed on the project The total of the installation and maintenance training shall consist of at least forty (40) clock hours of training for each participant. Cover all aspects of inside plant and outside plant fiber optic cable installation, maintenance, and trouble-shooting including the use of all recommended test equipment. Ensure that all equipment, materials, and procedures used in the training comply with the requirements of Section 935.

As a minimum, include in the fiber optic training the following:

THEORY

- Light
  - Light transmission through fiber cable with discussion on effect of cable composition.
  - Theory definitions
- Electromagnetic spectrum
  - Composition of light
  - transmission of differing spectrums of light
- Refraction/reflection (Effects of light within fiber cable and relationship of light against core and cladding materials)
- Attenuation (Effects of fiber cable on transmission speeds of light)
- Signal wavelength selection (single-mode, multi-mode)
  - Selection of cable based on application
  - advantages of each cable
- Signal transmission form

- Analog, digital
- Bandwidth

SAFETY

- Working with optical fibers
  - Handling precautions
  - Working with lasers
  - Chemicals used in preparation, maintenance, splicing

ADVANTAGES/DISADVANTAGES

- Comparison of fiber optic cable to copper cable

COMPARISONS

- Fiber optic cable sizes and characteristics (capacities, weights, single-mode, multi-mode)

FIBER

- Types of propagation
- Multi-mode - characteristics and applications MM fiber spools
- Single-mode - characteristics and applications SM fiber spools
- Fiber cross sections, 250 μm and 900 μm fiber
- Fiber characteristics and specifications
- Fiber manufacturing

CABLE

- Loose tube designs, sample cable
- Tight buffer designs, cable samples
- Selection of cable to environment
- Cable for strip/prep for fan-out kit installation

CONNECTORS/COUPLINGS

- Connector designs, connectors/couplings samples
- Connectors in fiber systems
  - Installation of 900 μm fan-outs on loose tube cable, buffer tube fan-out
  - Installation of 3.0 mm fan-outs on central core cable, 3.00 mm fan-out tubing
  - Installation of Spider fan-out on loose tube cable, spider fan-out.
  - Field installation of MM/SM connectors (attendees terminate ends of cables with connectors)

SPLICING

- Fiber preparation and cleaving

- Factors effecting splice loss
- Splice trays
- Splices
  - Fusion and mechanical
  - Mechanical splice installation, mechanical splice demo
  - Fusion splicing class demonstration

DISTRIBUTION HARDWARE

- Distribution equipment (FDC)
- Wall and rack mount distribution equipment
- Field connecting, pigtails
- Field installation of connectors, demonstrate loose tube cable

INSTALLATION/MAINTENANCE

- Installation of outside plant cable (OSP) and closures
- Installation of inside plant cable (ISP)

TESTING AND TROUBLESHOOTING

- Power meter and light source usage, demonstration and test
- Visual fault locator usage, demonstration and test
- OTDR usage, demonstration and explanation of trace results with samples of multi-mode and single mode fiber
- Interpretation of OTDR reports on single and multi-mode fiber

FIBER IN ITS AND TRAFFIC SIGNAL CLOSED LOOP APPLICATIONS

- Typical architectures course book
- Closed loop traffic interconnect, trunk and drop/point to point connection
- CCTV/VDS trunk and drop/point to point
- Overall GDOT system architectures

935.4 Measurement

Fiber optic system, temporary fiber optic system, testing and training that is complete, in place, accepted and of the kind, size, and type specified is measured as follows.

A. Outside Plant Fiber Optic Cable

Outside Plant fiber optic cable is measured for payment by the actual number of linear feet installed, complete, functional, and accepted. Fiber optic cable shall include but is not limited to all required fiber optic connectors, fiber optic snowshoes, , marking and labeling, patch cords and other ancillary items as required for a complete fiber optic installation.

B. Inside Plant Fiber Optic Cable

Inside Plant fiber optic cable is measured for payment by the actual number of linear feet installed, complete, functional, and accepted. Fiber optic cable shall include but is not limited to all required fiber optic connectors, marking and labeling, patch cords and other ancillary items as required for a complete fiber optic installation.

C. Closures

Underground splice closures, aerial splice closures, and FDCs are measured for payment by the actual number of units installed, complete, functional and accepted. Closures shall include but are not limited to all required mounting and fastening hardware, fiber optic connectors, FDC interconnect cables/pigtails, marking and labeling, patch cords and other ancillary items as required for a complete closure installation.

D. Fiber Optic Splice, Fusion

Fiber optic splices, fusion, are measured for payment by the actual number of splices made, complete, and accepted. Fiber optic splices associated with the use of factory-connectorized FDC interconnect cables/pigtails on drop cables, in accordance with Section 935.2, will not be measured separately for payment. Mechanical splicing for temporary applications shall be included in other work and will not be measured separately for payment

E. Temporary Fiber Optic System

Payment for work on the Temporary Fiber Optic System will be a lump sum project bid price and will be considered full compensation for all installed materials and labor associated with the Temporary Fiber Optic System. Specific items include but are not limited to timber poles, guys, anchors, lashing, messenger cable, conduit directional boring, conduit, fiber optic cable, fusion splicing, hardware attachments, splice enclosures, equipment rentals, and disposal of materials.

F. Transceivers

External drop and repeat transceivers and external star transceivers are measured for payment by the number actually installed, complete, functional, and accepted.

For each unit installed, furnish and install all mounting and interconnection materials, including but not limited to card cages, hardware, fiber and RS-232 jumper cables, RS232/485 converters, and power supply cables at no separate cost to the Department.

G. Testing

Testing is measured as a lump sum for full delivery of testing and acceptance requirements. Measurement of testing includes subsistence necessary to conduct the testing.

H. Training

Training is measured as a lump sum for all supplies, equipment, materials, handouts, travel, and subsistence necessary to conduct the training.

935.4.02 Limits

Not applicable

935.5 Payment

Outside and inside fiber optic cable, FDC interconnect cables/pig tails, splice closures, splices, temporary fiber optic system, transceivers, and testing are paid for at the Contract Unit Price for the various items. All other required items including; FDC interconnect cables/pigtails, fan-out kits, fiber optic connectors, fiber optic snowshoes, and other ancillary items for a completed fiber optic system shall be included as part of the below pay items. No separate payment shall be made for these items. Payment is full compensation for furnishing and installing the items complete and in place according to this Specification, with the exception of Training.

Training is paid for on a partial payment basis as follows:

The Department will pay 25% of the total contract bid amount for this item upon approval of the Training Plan. The Department will pay the remaining 75% after completion of all training as described in Subsection 935.3.08. The total sum of all payments cannot exceed the original contract amount for this item. Payment for all items of this Section is as follows:

Payment will be made under:

Item No. 935	Outside Plant Fiber Optic Cable (type, mode, size)	Linear Feet (Linear Meter)
Item No. 935	Inside Plant Fiber Optic Cable (type, mode, size)	Linear Feet (Linear Meter)
Item No. 935	Fiber Optic Closure (type, size)	Per Each
Item No. 935	Fiber Optic Closure, FDC Pre-Terminated (type, size)	Per Each
Item No. 935	Fiber Optic Splice, Fusion	Per Each
Item No. 935	External Transceiver (mode)	Per Each
Item No. 935	External Star Transceiver (mode)	Per Each
Item No. 935	Temporary Fiber Optic System	Lump Sum
Item No. 935	Testing	Lump Sum
Item No. 935	Training	Lump Sum

935.5.01 Adjustments

Not applicable

DEPARTMENT OF TRANSPORTATION
STATE OF GEORGIA

SPECIAL PROVISION

Project Number: CSMSL-0008-00(690)
P.I. No.: 0008690
Chatham County

SECTION 999 – DESIGN-BUILD PROJECT

Table of Contents

999.1 GENERAL DESCRIPTION..... 1

A. Project Location 1

B. Design-Build Concept..... 1

C. General Project Scope..... 3

D. Right of Way..... 8

E. Environmental..... 9

999.2 PLANS..... 13

A. General.....

999.3 DESIGN..... 14

A. General..... 14

1. Measuring Units.....

2. Design Software.....

3. Design Scope of Services.....

4. Design Reviews.....

5. Field Surveys.....

6. Quality Control/Quality Assurance for Design.....

7. Released for Construction.....

8. As-Built Plans.....

9. Ownership of Documents.....

10. Insurance.....

11. Publication and Publicity.....

12. Copyrighting.....

13. Patent Rights.....

B. Roadway..... 23

1. Preparation of Construction Plans.....

a. General Criteria.....

b. Design Specifications and Guidelines.....

c. Erosion and Sediment Control Sheets.....

C. Bridges and Structures..... 25

1. Design Specifications and Guidelines.....

2. Bridge Foundation Investigation.....

a. General.....

b. Field Investigation.....

c. Laboratory Testing.....

d. Final Analysis and Report.....

3. Hydraulic and Hydrological Study.....

4. Plan Submittals.....

5. Preliminary Bridge and Wall Plans.....

Table of Contents

a. Preliminary Bridge Plans……

b. Preliminary Wall Plans ……..

6. Final Bridge and Wall Plans……

a. Additional Bridge Design Criteria……..

b. Additional Wall Design Criteria……..

c. Bridge and Wall Construction Plans……

7. Shop Drawings……..

D. Utilities…….. 35

1. Coordination Responsibilities……..

2. General……

3. Required Information……

a. Preliminary Utility Plans……

b. Final Utility Plans……

c. Overhead/Subsurface Utility Engineering (SUE) Investigations……..

4. Sheet Layout……..

5. Miscellaneous Notes and Other Information……

E. Railroad…… 45

1. General Requirements……..……..

2. Railroad Design Standards……

3. Design Railroad Live Load……..

4. Design Lateral Pressures for Railroad Live Load Surcharge……

5. Clearances……

6. Permanent Clearances……

7. Temporary Clearances……

8. Crashwalls……

9. Drainage……

10. Erosion Control……

11. Utilities……

12. Miscellaneous……

13. Project Work Affecting Railroad Operations……

14. Railroad Agreements……..……..

15. Permanent ROW Encroachment Agreements(s) ……..……..

16. Railroad Right of Entry Agreements(s) ……

17. Operation Safety……..……..

18. Insurance Requirements……

19. Construction Requirements……

20. Track Clearances……

21. Temporary Excavation……

22. Excavation for Structures……

Table of Contents

23. Demolition, Erection, Hoisting……

24. Blasting……

25. Maintenance and Repair of Railroad Facilities……

26. Storage of Materials and Equipment……

27. Cleanup……

28. Damages……

29. Flagging Services……

30. Transporting Materials and Equipment Across Track……

31. Work for Benefit of Contractor……

32. Cooperation and Delays……

33. Safety Guidelines……

34. Insurance……

35. Failure to Comply……

F. Right of Way (ROW) …… 54

1. General Requirements……

2. Administrative Requirements……

3. ROW Acquisition Plan……

4. Schedule and Review Procedures……

5. Contractor's ROW Scope of Services……

6. Acquisition Process Summary……

7. ROW Personnel Qualifications……

8. Contractor Conflict of Interest……

9. Meetings……

10. Documentation and Reporting……

11. Responsibilities of Contractor……

12. Responsibilities of GDOT……

13. GDOT Project Monitor/Reviewer……

14. Responsibilities of the Office of the Attorney General……

15. Pre-Acquisition Activities……

a. ROW Plans and Engineering……

b. Title Services……

c. Introduction to Property Owners……

16. Appraisals……

a. Appraisal Services……

b. ROW Negotiation Package……

17. Acquisition Activities……

a. ROW Negotiations……

b. Relocation Assistance……

c. Closing Services……

Table of Contents

d. Condemnation Support……..

e. Clearance/Demolition of ROW…….

f. Property Fencing……

18. Early ROW Acquisition……

999.4 CONSTRUCTION…….. 66

999.5 MEASUREMENT AND PAYMENT…….. 67

999.6 TECHNICAL PROPOSAL……. 68

999.7 PAYMENT FOR WORK PRODUCT……... 69

Appendices

Form A

999.1 GENERAL DESCRIPTION

A. Project Location: This Project is primarily located in Port Wentworth, Chatham County, Georgia. The Project is on new location between SR 307/Bourne Avenue and the existing end of Jimmy Deloach Parkway.

B. Design-Build Concept: The Contractor and a design consultant (or design consultant team) will work together to provide the necessary services to design, acquire the right of way, and build the Project. The design consultant will either be acting as a subconsultant to the Contractor or as a joint-venture member with whom this agreement has been executed. In this document (Section 999), the words "design consultant" or "design consultant team" will refer to the consultant firm or consultant team acting as a subcontractor or joint-venture team member to the Contractor. The design consultant or design consultant team will not be required to fill out Department subcontractor forms for Department use.

The words "Engineer" (with a capital "E") will refer to those personnel of the Department that are acting in the capacity of an engineer for the Department. When the word "engineer" is used the designation will refer to those persons acting on behalf of the Contractor. The Department will have oversight responsibilities which include performing reviews and granting acceptance of the design and construction work.

Designate a Project Manager to serve as the single point of contact for the duration of the project and will provide real-time updates on project status and issues associated with the project.

Notice to Proceed (NTP) 1 is the Department's issuance of NTP for preliminary design activities. Title 23, CFR, Section 636.103 (23 CFR Section 636.103) defines preliminary design to include but is not limited to preliminary engineering and other activities and analyses, such as topographic surveys, metes and bounds surveys, geotechnical investigations, hydrologic analysis, hydraulic analysis, utility engineering, traffic studies, financial plans, revenue estimates, hazardous materials assessments, general estimates of the types and quantities of materials, and other work needed to establish the parameters for the final design.

NTP 2 is the Department's issuance of NTP for final design activities. NTP 2 will not be issued prior to acceptance of the preliminary plans. Title 23, CFR, Section 636.103 (23 CFR Section 636.103) defines final design as any design activities following preliminary design and expressly includes the preparation of final construction plans and detailed specifications for the performance of construction work.

NTP 3 is the Department's issuance of NTP for land disturbing activities. Purchase of construction materials or rolling stock and project construction will not begin until issuance of NTP 3.

Ensure no land disturbing activities until the following have been accepted by the Department for the entire project or for any portion(s) of the project as approved by the Department; and the Department provides written authorization through the issuance of NTP 3:

1. **Basis of Design**
2. **ROW certification**
3. **Environmental certification**
4. **Approved Permits (as applicable)**
5. **Final construction plans**
6. **Erosion Sedimentation and Pollution Control Plans**
7. **Notice of Intent (NOI) submission to EPD**
8. **QC/QA Plan**
9. **Utility Agreements, Utility Encroachment Permits, Utility Relocation Plans, and/or Contractor Certification of "No-Conflict"**

After the Department has provided written authorization and the final plans are Released for Construction, it shall be the Contractor's responsibility to continue to properly coordinate the Work during the land disturbing phase(s) of the project including but not limited to right of way requirements, utility relocations, and/or environmental requirements. Any additional project costs involving subsequent utility relocations that is determined to be no fault of the Utility shall be at the Contractor's cost with no additional cost to the Department. Any additional project costs associated with additional right of way or environmental impacts shall be at the Contractor's cost with no additional cost to the Department.

Bids on the Project will reflect designing and constructing the Project as shown in the Scope (999.1.C) and close conformity to applicable portions of the Costing Plans. No additional design exceptions and no design variances will be assumed by the Contractor.

Ensure submission of the Basis of Design. The Basis of Design narrative will constitute the Contractor's ownership of or modifications to the documents provided "for information only" (See 999.2.A) as well as a discussion of how this information will be utilized to develop the final design. Ensure submission of any proposed changes in the design including the justification for the changes.

The Contractor may propose alternative methods/solutions to the Project Scope once the Project is awarded. The proposal must meet the following criteria:

- no additional or increased costs,
- no extension in overall schedule (or specified milestones),
- no exceptions to specifications included in this contract,
- no reduction in scope.

Ensure alternatives are submitted to the Engineer in writing and include clear documentation background, reason for the change, and any potential cost and/or time savings. The Department will authorize changes in writing; the Department reserves the right to approve or deny the proposed changes.

Ensure use of those entities prequalified in related disciplines (design, traffic analysis, geotechnical, etc.) as presented in the Statement of Qualifications (SOQ). Revisions to the design and data-gathering elements of the team and/or the proposed assignments reflected in the SOQ require approval by the Engineer. Approval of any replacements in the team shall occur prior to the letting of the Project. All proposed changes to the team must be received prior to letting. Ensure all requests for changes are sent to the following contact:

Transportation Services Procurement Administrator
Georgia Department of Transportation
Office of Transportation Services Procurement
One Georgia Center,
600 West Peachtree Street, NW, Room 1920
Atlanta, GA 30308

Additional disciplines needed to meet the requirements of the special provisions for this Project not identified in the SOQ must meet GDOT prequalification as required and any applicable standards, policies or guidelines of the local, state or federal agencies or utility owners.

Any revisions to the team and/or the proposed assignments reflected in the SOQ after award of the contract shall be approved by the Department. Ensure all requests are submitted to the Department's Engineer for review and further handling for approval.

The work covered under this Specification includes the furnishing of all materials, labor, tools, equipment, and other incidental items for the designing, acquiring right of way, obtaining necessary permits, detailing, and construction of the Project contained in the Project Scope. Ensure all the improvements for this Project are within the right of way as shown in the Final Approved Right of Way Plans (See also 999.1.D Right of Way).

Information related to "existing conditions", as reflected in the Costing Plans Package, is for information only. The Contractor shall be aware existing conditions found in the Costing Plans Package may have changed since the field survey work and associated design efforts were completed. Verify all existing conditions. No claims will be considered due to decisions/assumptions made by the Contractor based on "existing conditions" reflected in the Costing Plans Package.

C. General Project Scope: The Contractor is responsible for the preliminary and final design of the project, which includes the construction of four 12' wide travel lanes (two in either direction) separated with a median barrier. The proposed project is to be designed for a posted speed of 55 mph. The proposed project length would be approximately 3.1 miles.

The following is a list of the major items of the Project:

1. Construction of a new bridge carrying proposed Jimmy Deloach Connector over Crossgate Road.
2. Construction of a new bridge carrying proposed Jimmy Deloach Connector over Norfolk Southern Railway. Design and construction shall account for one additional track located on either side of the existing track. Refer to section 999.3.E for additional Norfolk Southern Corporation requirements.
3. Construction of a new bridge carrying proposed Jimmy Deloach Connector over SR 30/Bonnybridge Road.
4. Construction of a new bridge carrying proposed Jimmy Deloach Connector (southbound lanes) over wetlands.
5. Construction of a new bridge carrying proposed Jimmy Deloach Connector (northbound lanes) over wetlands.
6. Prepare a flood study for bridge(s) over tidally influenced waters and design the bridge(s) for a "no rise" condition, if applicable. Contractor shall obtain a community concurrence letter prior to construction of bridge(s), as per the GDOT Drainage Manual, if required.
7. Construction of a new bridge carrying proposed Jimmy Deloach Connector (southbound lanes) over proposed Pierce Ave.
8. Construction of a new bridge carrying proposed Jimmy Deloach Connector (northbound lanes) over proposed Pierce Ave.
9. Northbound and southbound bridges over proposed Pierce Ave must have a minimum separation as shown in the Costing Plans Package in order to allow for a future extension of Jimmy Deloach Connector to I-95.
10. Pierce Ave reconstruction, as required by the project, will be done under traffic.

11. Extend Pierce Ave to maintain access to all properties on the eastern end of Pierce Ave which currently have access in General Conformance to the Costing Plans.
12. Provide paved residential driveway access from Pierce Ave to the now or formally Rachel Royal property and all other properties which previously had access on Flonnel.
13. Construct a grade separated, full diamond interchange at the intersection of Jimmy Deloach Connector and Jimmy Deloach Parkway/Pierce Avenue with one travel lane on each ramp and an additional right turn lane at the southbound ramp heads. Construct at minimum one thru travel lane in each direction and seperate left turn lanes for each on ramp between the northbound and southbound ramps.
14. Re-construct a portion of SR 307/Bourne Avenue with two travel lanes in each direction and dual left turn lanes onto northbound Jimmy Deloach Connector.
    a. Ensure SR 307/Bourne Avenue re-construction extends to tie into a concrete pavement section on eastern and western project termini. Requires coordination with GDOT PI No. 0000345 and PI No. 562165.
    b. Construct a commercial driveway for the Cross Atlantic LLC and Joe C. Skies properties in general conformance to the Costing Plans Package.
    c. The Value Engineering Recommendation Implementation Report recommends not implementing a T-Intersection at this location. If a T-Intersection is proposed, the Environmental Document will need to be updated and a reversal to the Value Engineering Recommendation Implementation Report will need to be proposed and approved. The right of way acquired must accommodate the split ramp design.
    d. Install signals at the intersection of Jimmy Deloach Connector and SR 307/Bourne Avenue.
15. Construct a grade separated, full diamond interchange at Jimmy Deloach Connector and Grange Road with right turn and acceleration lanes at each ramp head. Provide a minimum of 520 feet between centerline ramp intersections.
    a. Interchange must accommodate Grange Road widening project, PI 0007885.
    b. Construct Grange Road asymmetrically by maintaining the existing southern edge of pavement as the proposed edge of paved shoulder.
16. A field engineer's office will be required on this Project. Refer to Special Provision 153.
17. Provide material pits for the construction of the project.
18. Install Right of Way monuments on this project for all required right of way.
19. A Georgia Power Company transmission line traverses the Project in several locations. The Department requires that any construction within the existing easement of this transmission line adhere to Georgia Power Company safety requirements as follows:

    "All work around high voltage electric lines is regulated by the Georgia High Voltage Safety Act, which can be found at http://www.georgiapower.com/safety/law.asp. This act states that "if you are responsible for any activity performed within 10 feet of an overhead high voltage line, you are required **FIRST** to give notice to the Utilities Protection Center." No work within 10 feet of the lines may be performed until Georgia Power Company is given notice and sufficient time to take safety precautions and schedule personnel to be on-site.

    If work is to be performed within 10 feet of Georgia Power Company lines, a line clearance will likely be required, at the discretion of Georgia Power Company. Line clearance availability is dictated by weather and loading conditions, as well as other

activities on the electric grid system. Line clearances are granted by the Georgia Control Center (GCC) and are generally unavailable from May to September. The GCC requires 5 working days notice to review a clearance request (not including weekdays or Holidays).

Clearance requests should be sent to **deeverit@southernco.com** as soon as the required dates are known. The GCC requires a minimum of 7 working days not including weekends and holidays to schedule a clearance, however, a longer lead time provides a higher probability of getting a clearance approved. Georgia Power Company requests a tentative schedule 60 days from the expected clearance date and an exact schedule 30 days to the known clearance date. Clearance durations should be limited to the amount of time required to perform work in the immediate vicinity of transmission lines."

20. Refer to section 999.3.D and any other applicable Special Provisions. The Department requires that any construction within the existing Georgia Power Company easement cannot utilize cranes or any other equipment that would vertically encroach closer than 10' to the Georgia Power Company distribution line. The Contractor will be responsible for validating these requirements prior to construction.
21. Install 4' woven wire, 2 strand barb, fence for all limited access fence not located on top of retaining walls.
22. Install 6' tall galvanized steel chain link fence on top of all retaining walls, or as directed by the Engineer.
23. Ensure the pavement design meets or exceeds the pavement design as follows:

Paving for Jimmy Deloach Connector, Ramps, Grange Rd, and SR 307/Bourne Avenue			
Travel Lanes		**Shoulders**	
Material	Spread Rate	Material	Spread Rate
Plain Portland Cement Concrete Pvmt, Class 1 Concrete, 12 Inch Thick	N/A	Plain Portland Cement Concrete Pvmt, Class 1 Concrete, 12 Inch Thick	N/A
19 mm Superpave, GP 1 OR 2, Incl Matl & H Lime	330 lb/sy	19 mm Superpave, GP 1 OR 2, Incl Matl & H Lime	330 lb/sy
Graded Aggregate Base Course – 12 Inch Depth Incl Matl	N/A	Graded Aggregate Base Course – 12 Inch Depth Incl Matl	N/A
Paving for Pierce Avenue			
Travel Lanes		**Shoulders**	
Material	Spread Rate	Material	Spread Rate
12.5 mm Superpave, GP 1 OR 2, Incl Polymer- Modified Bitum Matl & H Lime	165 lb/sy	19 mm Superpave, GP 1 OR 2, Incl Matl & H Lime	220 lb/sy
19 mm Superpave, GP 1 OR 2, Incl Matl & H Lime	220 lb/sy	25 mm Superpave, GP 1 OR 2, Incl Bitum Matl & H Lime	660 lb/sy
25 mm Superpave, GP 1 OR 2, Incl Bitum Matl & H Lime	660 lb/sy	Graded Aggregate Base Course – 12 Inch Depth Incl Matl	N/A
Graded Aggregate Base Course – 12 Inch Depth Incl Matl	N/A		

24. Place all driveways, where access is allowed, as directed by the Engineer in accordance with Rules and Regulations for Control and Protection of Department of Transportation Rights-of-Way. Pave all driveways to the Right-of-Way line, or tie-in point, whichever is greater. Repave all non-concrete driveways that are to be reconstructed with asphalt. Repave concrete driveways with concrete. The driveway locations indicated on the plans are from the best available data. Construct (unless otherwise noted on the plans) new driveways to match the actual field location of existing driveways where they are not in conflict with the Rules and Regulations. Obtain the approval of the Engineer prior to making any revisions such as to location, width and/or number of drives to be constructed. Driveways shall be paved as follows:

Residential Asphaltic Concrete Driveways	
Material	Spread Rate
12.5 mm Superpave, GP 1 OR 2, Incl Matl & H Lime	330 lb/sy
Graded Aggregate Base Course – 6 Inch Depth Incl Matl	N/A
Commercial Asphaltic Concrete Driveways	
Material	Spread Rate
9.5 mm Type II, Superpave, Blend 1, Incl Matl & H Lime	135 lb/sy
19 mm Superpave, GP 1 OR 2, Incl Matl & H Lime	220 lb/sy
25 mm Superpave, GP 1 OR 2, Incl Bitum Matl & H Lime	330 lb/sy
Graded Aggregate Base Course – 8 Inch Depth Incl Matl	N/A
Residential Concrete Driveways	
Material	Spread Rate
Portland Cement Concrete – 4”	N/A
GRADED AGGREGATE BASE – 6” DEPTH	N/A
Commercial Concrete Driveways	
Material	Spread Rate
Portland Cement Concrete – 8”	N/A
GRADED AGGREGATE BASE – 10” DEPTH	N/A

25. Contractor to extend 19 mm Superpave, GP 1 or 2, incl Matl and H Lime and Graded Aggregate Base Course sections two (2) feet outside of edge of travel way on Jimmy Deloach Connector, Ramps, Grange Rd, and SR 307/Bourne Avenue.
26. All permanent asphaltic concrete shall include H-Lime.
27. Add polymer-modified liquid AC to SMA and OGFC asphaltic mixes if used on this project.

28. Asphaltic curb shall be installed behind guardrail when the fill height exceeds 10 feet. When asphaltic curb is installed behind guardrail, the Contractor shall use concrete spillways with down drains or concrete flumes to drain.

29. Existing pavement inside the construction limits that will no longer be used shall be obliterated, graded to drain and grassed.

30. Include the following detail in the design and construction of the Project as appropriate:

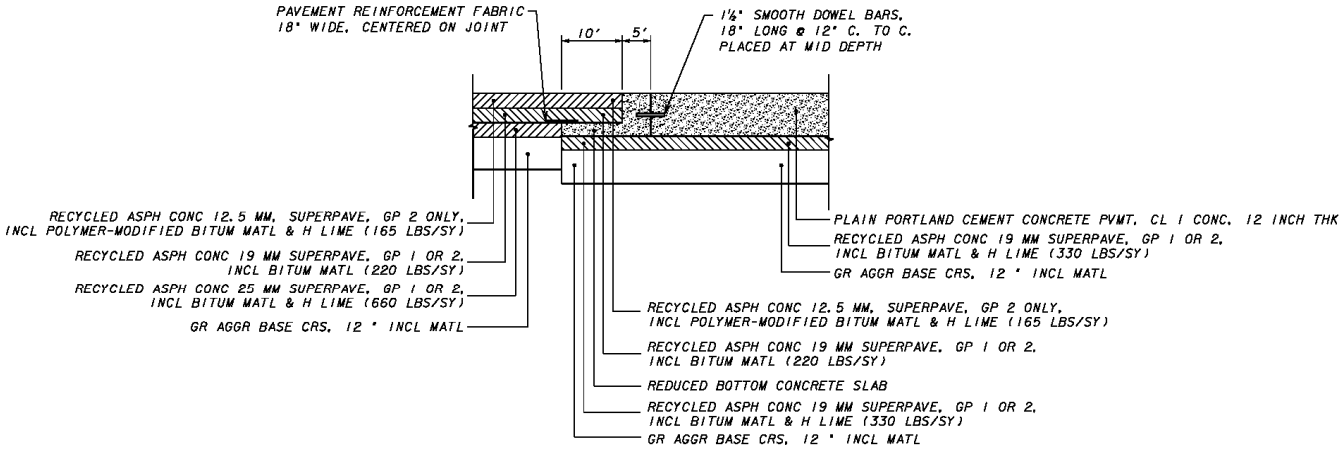

JOINTED PLAIN CONCRETE PAVEMENT
TO ASPHALT PAVEMENT TRANSITION DETAIL

31. There is no suitable place to bury existing construction debris within the project's limits. Any contaminated soils excavated during construction activies must be disposed of at a permitted lined municipal solid waste landfill in accordance with Georgia's Rules for Hazardous Waste Management.

32. Replace existing impacted facilities in kind or upgrade. Possible affected resources include, but are not limited to the following: signing and marking, utilities, and any utility prescriptive access and ingress to easement or right of way.

    a. Construct utility access driveways a minimum of 12' wide gravel, and with a maximum slope of 4:1.

33. Ensure all drainage structures located in a designated floodway are sized to comply with FEMA regulations. FEMA structures require the use of a computer analysis approved by FEMA, usually HEC-2 analysis, to remodel the flood plain and in order to document that the 100-year storm does not cause a rise in the base flood elevations, floodway elevations, or floodway widths. Ensure all FEMA and Local Government requirements are satisfied if the published floodway is altered and all the necessary maps and computer printouts are included in the drainage analysis. All other guidelines and computation sheets are in the "Manual on Drainage Design for Highways". Submit all final drainage computations as required in Table 4-1.

34. Conduct a soil survey.

35. Adhere to the recommendations of the soil survey; however, as a minimum the following geotechnical construction requirements apply for areas with soft clays, marshes, or other compressible materials:

    a. Minimum six month settlement period, for fill construction, is required after the fills have been placed to ensure that settlement has stopped before the pavement is constructed.

    b. Options for construction

1) Construct using lightweight material, as per Special Provision 208, topped with several feet of fill and use 2:1 slopes with filter fabric.
2) Construct a bridge.
3) Improve foundation conditions through the use of stone columns or timber piles prior to placing fills.
4) Construct fills with normal soils on 4:1 slopes using wick drains, filter fabric, stage construction, and surcharges.

36. Adhere to the recommendations of the soil survey; however, as a minimum the following geotechnical construction requirements apply when foundation conditions are better (sandy and firmer clay) with lower fill heights can be constructed with normal soils on 2:1 slopes.
37. Ensure continuing service is provided to all waterline, gas line, and transmission lines as per Standard Specification Section 107.21, respective Memorandums of Understanding, and all other Special Provisions and Standard Specifications.
38. Contractor is responsible for all interruption to service liabilities due to failure to adhere to Special Provision Section 999.1.C.37.
39. Construction not to encroach on the Southern Natural Pipeline property located approximately between STA 3013+18 and STA 3016+95 LT.
40. Construction not to encroach on the Crescent Investments, Inc property or the buffered open water 4B located approximately between STA 249+00 and STA 256+75 LT.
41. Provide a minimum of 10 portable changeable message signs to be used in accordance with Supplemental Specification 632.
42. The Department has obtained a Design Exception for the following design feature and the Design Exception will be installed as approved:
    a. Reduce outside bridge shoulder width to a minimum of 4.5 feet on mainline Jimmy Deloach Connector at its tie in with existing Jimmy Deloach Parkway Bridge over SR 21 and CSX Railroad from mile point 8.46 to mile point 8.43. Install signing, striping, tapering techniques along with additional striping and raised pavement markers as indicated in the approved Design Exception.
43. Add the following notes to the Construction Plans:
    a. All borrow and waste sites for this project shall be environmentally approved prior to construction activities. All common fill or excess material disposed outside the project Right of Way shall be placed in either a permitted solid waste facility, a permitted inert waste landfill, or in an engineering fill.
    b. There is no suitable place to bury the existing construction debris within the Project's limits. The Contractor shall provide an environmentally approved site to dispose of the existing construction debris at no additional cost to the Department.

D. Right of Way: The Contractor shall be responsible for the acquisition of the Right of Way and Easements required for the construction of the Project. See Section 999.3.F.

Any construction or temporary easement required to construct the project shall be in the name of Georgia Department of Transportation. Land or easements acquired outside those areas needed for actual construction of the project or as required by relocation of Utilities (e.g. construction office space, material storage) will be the responsibility of the Contractor. GDOT will not pay for land or easements outside the construction footprint of the project.

E. Environmental: Ensure adherence to and provide all material, labor, equipment, and other incidentals required to adhere to the "Commitments/Requirements" applying to the Contractor, design or construction of the Project. Key words such as "construction," "contractor," "work," etc., point to the areas for which the Contractor is responsible.

1. Prepare an Environmental Compliance and Protection Plan (ECPP) and submit to GDOT for approval within 30 days of NTP. The ECPP shall establish the approach requirements and procedures to be employed to protect the environment. All ECPP components shall reflect in order of priority: impact avoidance, minimization, and as last resort, compensatory mitigation. The ECPP shall demonstrate adherance to requirements of the applicable USACE, GDOT, EPD, and Governmental Entities having jurisdiction of the corridor, including those detailed as commitments in the Environmental Commitments Matrix and Environmental Timeframe Matrix.
2. The GEPA document for this Project is a Environmental Evaluation Report / Notice of Decision (EER/NOD). The Department is responsible for preparation and obtaining approval of the EER/NOD and any Environmental Reevaluations (of the EER/NOD) from the US Army Corps of Engineers (USACE) since the Contractor is prohibited from being involved with the decision making responsibilities, related to the GEPA process (23 CFR Ch 1, Section 636.109(b)(6)). In addition, the Contractor may make recommendations to the Department for consideration.
3. The Contractor will adhere to all commitments included in the Environmental Commitments Table from the approved EER/NOD.
4. The EER/NOD and Special/Technical Studies are valid until project changes occur which would invalidate the original findings. Any and <u>all</u> design changes made by the Contractor, which are outside of the parameters of the approved Environmental documentation, may require that one or more of the Special/Technical Studies (Air, Archaeology, Ecology, History, and Noise) be updated. Please note, revising Special/Technical Studies may require that review/approval coordination with the various agencies be reopened. Project changes would also require an Environmental Reevaluation of the EER/NOD. Updates to the Special/Technical Studies and the Environmental Reevaluation will be completed by the Department. The Environmental Timeframe Matrix provides approximate timeframes for environmental approvals to assist the Contractor in scheduling.
5. In order to update Special/Technical Studies and complete the Environmental Reevaluation the Contractor will provide to the Department project change information, revised/final plan sheets, and any additional work product that may need to be considered in the GEPA analysis.
6. To proceed to Construction, the Special/Technical Studies and the GEPA document must have addressed all project changes that would affect environmental resources. Should there be discrepancies, updated Special/Technical Studies and an updated GEPA document may be required.
7. Once it has been determined that the Environmental documentation is accurate and all GEPA related tasks (such as approval of an Environmental Reevaluation, all Preconstruction Environmental Commitments, including, but not limited to receipt of all permits, variances, and the purchase of mitigation credits) have been completed the Department will issue an environmental certification. **No land disturbing activities will take place until this certification or conditional certification is issued.**
8. The Contractor shall provide the proposed impacts to streams and wetlands, which shall include impacts that result from utility relocations and temporary and/or permanent impacts that result from construction of the Project.

9. The Contractor shall prepare the Individual Permit (IP) application to the Department's satisfaction. The Department will transmit the IP to the USACE. The Contractor shall be responsible for satisfactorily addressing the USACE's comments. The Contractor is required to satisfactorily address the USACE's comments within 14 calendar days of receipt. If any additional impacts result from the Contractor's proposed design versus those in the most recent ecology addendum, then the Department will perform special studies which will require 120 additional days prior to the Department's submittal of permit documentation to the appropriate agency and will require the Department to complete a reevaluation. Once the Department receives an approved IP from the USACE, the Department will issue written notification to the Contractor that the Contractor shall then acquire all mitigation credits in the name of the Department as required under the approved permit. All mitigation credits obtained by the Contractor and applied to the Project shall be approved by the USACE. Upon satisfactory receipt of the Contractor's credit purchase, the Department will provide written authorization to work in jurisdictional Waters of the US in accordance with the permit conditions.

10. A new mitigation bank cannot be constructed as part of this project.

11. The Contractor is responsible for verifying the need for any Buffer Variances on this Project. The Contractor shall also be responsible for the necessary design and construction needed to avoid or mitigate for the buffer(s) impact. If a Buffer Variance is identified then the Contractor is responsible for notifying the Department no later than the time of the preliminary plans submittal to the Department. The Contractor shall prepare the Buffer Variance application to the Department's satisfaction. The Department will transmit the Buffer Variance application to Georgia's Environmental Protection Division (EPD). The Contractor shall be responsible for satisfactorily addressing Georgia EPD's comments. The Contractor is required to satisfactorily address the Georgia EPD's comments within 14 calendar days of receipt. The Buffer Variance cannot be granted prior to issuance of the IP.

12. The Contractor shall be responsible for erecting orange barrier fencing within the Project area to establish and protect any Environmentally Sensitive Areas (ESA) within the Project in order to prevent encroachment upon ESA during construction activities. Within ESA buffers for which a variance was obtained, orange barrier fence shall be erected within the buffer at the limits of the construction for which the variance was obtained.

13. Verify the need for and prepare the application for a Revocable License and all required supporting documentation to the Department's satisfaction. The Department will submit the application package to USACE. Contractor to complete any required revisions to the application package.

14. The Contractor is responsible for installing exclusionary barriers as specified in Special Provision 107.23G for the protection of migratory birds during construction.

15. The following are Commitments/Requirements as stipulated by the approved GEPA document, actual impact requirements may change per the final design:

    a. All streams, buffers, and wetlands will be delineated and labeled as Environmentally Sensitive Areas (ESAs) on the construction plans.

    b. All National Register of Historic Places (NRHP) listed or eligible properties will be delineated and labeled as ESAs on the construction plans.

    c. An Individual Permit will be obtained from the U.S. Army Corps of Engineers (USACE) for the approximately 63.52 acres of permanent wetland impacts.

    d. The wetland impacts are to be mitigated in accordance with the USACE, Savannah District's March 2004 Standard Operating Procedures for compensatory

mitigation through the purchase of 537 mitigation credits from a USACE approved mitigation bank that services HUC 03060109 or payment in lieu.

e. The Georgia DOT Office of Right-of-Way should note in any purchase agreements that contamination exists at sites: PCS Nitrogen Fertilizer/Arcadian, Maxim Crane, Interstate National Lease, Inc., and Coastal Transport. Controls to ensure adequate protection of employee safety in accordance with Georgia's Rules for Hazardous Waste Management shall be implemented and added as an appropriate note on the plans.

f. A note will be placed on the plan sheet stating that any contaminated soil excavated during construction at PCS Nitrogen Fertilizer/Arcadian, MIT Tank Wash, Maxim Crane, Interstate National Lease, Inc., and Coastal Transport must be disposed of at a permitted lined municipal solid waste landfill.

g. If additional contaminants or future sites are found through subsequent surveys, avoidance alternatives may be considered, or applicable laws and regulations concerning the removal of toxic or hazardous material would be followed. Removal would be coordinated with Georgia EPD. Implementation of the proposed project would not preclude any necessary site remediation to be performed by others.

h. The City of Port Wentworth or Chatham County (as applicable) and would coordinate any changes in travel patterns resulting from the proposed project with local police, fire, and other emergency service agencies prior to project construction.

i. Based on preliminary design the project would have no—rise within the regulatory floodplain. Design changes within the floodplain would require hydraulic analysis and no-rise certification.

j. Any contaminated soil excavated during construction at the PCS Nitrogen Fertilizer/ Arcadian, MIT Tank Wash, Maxim Crane, Interstate National Lease, Inc., and Coastal Transport properties must be disposed off-site in accordance with prevailing rules and regulations of EPD, Land Protection Branch, Solid Waste Management Program rules and regulations notes on plans.

k. A National Pollutant Discharge Elimination System (NPDES) permit shall be required for this project. A Notice of Intent (NOI) shall be submitted by the construction contractor following the award of the contract but prior to the start of construction.

l. Procedures for Coordinating Highway Encroachments on Floodplains with the Federal Emergency Management Agency would be followed for the proposed project.

Environmental Timeframe Matrix

Document/ Permit/ Authorization	Coordinating Agency	Materials Needed	Approval Time*	Additional Information	Expiration of Document/Permit/ Authorization
GEPA EER and Re-Eval	Georgia Environmental Protection Division/U.S. Army Corps of Engineers (USACE)	The EER Notice of Decision (NOD) was signed June 22, 2011. Re-Eval - A list of project changes since the Environmental Effects Report (EER) was approved and an updated project description will be required from the DB contractor. Project changes include changes to the resources, setting, changes to the project's impact footprint and regulatory changes. Re-Eval. Assess Air, noise, history, archeology, wetlands, streams, protected species and floodplains. If it has been 5 years or more since the field survey work was performed, then the field surveys must be evaluated to determine if they must be redone. Addenda from GDOT specialists regarding any changes in project impacts due to more detailed design. plans.	6 months USFWS 30 days for Section 7. USACE 30 days to review Re-evaluation	All preconstruction commitments on the green sheet must be completed or schedules to be completed. The status of outstanding commitments will be included in the Re-Eval.	No expiration, unless changes are made that affect project impacts or commitments.
Section 404/401 Water Quality Certification	U.S. Army Corps of Engineers (USACE)	Individual Permit Application, 8.5" X 11 " plans including cover sheet and construction plan sheets that show the impacted resources, Jurisdictional determination request. EER Notice of Decision (NoD)	6 to 9 months	Mitigation for wetland impacts requires USACE approval before work can begin. Georgia Environmental Protection Division (EPD) to review application and determine whether to issue 401 Water Quality Certification and Revocable License for Marshland Impacts.	In general, two years from date of USACE letter. Then an additional 12 months to complete the activity.
State Revocable License for Use of Water bottoms	Georgia Department of Natural Resources	Drawings of the proposed project, site plans, existing and proposed features, total area of the project footprint in sq ft., Cross-section using the same water elevations as the Site Plan, water depth, Deed or other Instrument of Title or Permission and Property Plat, vicinity map, adjoining property owners.	Concurrent with the IP approval schedule of 6 to 9 months.		GA-DNR will issue a Letter of Permission (LOP), along with a consistency determination. The LOP has a three year life. If the permitted activity is incomplete after three years then a new LOP will be issued.
Stream buffer variance	Georgia Environmental Protection Division	none	n/a	Stream buffer variance not needed	n/a
NPDES	Georgia Environmental Protection Division	Erosion and Sediment Control Plan/Monitoring Plan. Notice of Intent (NOI)	Submit NOI at least 14 days prior to the start of work	Keep copy of NOI with plans on-site	Permit activates 14 days after postmark. NPDES permit expires in 2013.
Conditional Letter of Map Revision (CLOMR)	Federal Emergency Management Agency (FEMA)	Hydrology/Hydraulics Report. FEMA Form MT-2	12 months	FEMA Form MT-2.	None. Requires a Letter of Map Revision (LOMR) after construction is complete.
Coastal Zone Management Act (CZMA)	Coastal Resources Division, Georgia Coastal Zone Management, Georgia Department of Natural Resources	None	6 months	Concurrence from Coastal Resources Division required	None

*Times are approximate

999.2 PLANS

A. General: The Costing Plans Package prepared on behalf of the Department includes multiple resources. Information will be made available to the short listed Design-Build Teams via a read only GDOT FTP site and is considered for information only. These resources are to be used in preparing the bid and corresponding technical proposal (refer to Special Provision Section 102—Bidding Requirements and Conditions and Special Provision Section 999.6-Technical Proposal) for this Project. Notify the Department of any resource in error or that would cause the design (as presented in the Costing Plans Package) to not be constructible.

The Georgia Department of Transportation, in making this information available to Contractors, assumes no responsibility for its accuracy. No claim will be considered if the Contractor relies on this "For Information Only" data in its bidding or in its construction operations and finds that it is inaccurate. The Contractor's attention is directed to Specifications 101.16 – CONTRACT and 102.05 – EXAMINATIONS OF PLANS, SPECIFICATIONS, SPECIAL PROVISIONS, AND SITE OF THE WORK.

1st Access to the FTP site through the internet: ftp://dotpublic:dotoutside02@ftp.dot.state.ga.us/	**2nd** Access to the FTP site through the FTP program: Username: dotpublic Password: dotoutside02 Host Name: ftp.dot.state.ga.us

The files are located at /DOTFTP/InnovativeProgramDelivery/0008690/. Check this site weekly for possible updates.

999.3 DESIGN

A. General: Ensure the complete design of the Project.

1. Measuring Units: Ensure the Project is designed in **English** units of measurement.

2. Design Software: Design using MicroStation V8i in conjunction with InRoads (version 08.11.05.17).

3. Design Scope of Services: Prepare Plans in accordance with the Georgia Department of Transportation's instructions as to design criteria, procedures, and format as contained in this Special Provision and in accordance with, but not limited to the following reference materials current at the time of advertisement: GDOT Design Policy Manual, GDOT Signing and Marking Design Guidelines, GDOT Driveway and Encroachment Manual, AASHTO Roadside Design Manual, AASHTO Geometric Design of Highway and Streets, Manual on Uniform Traffic Control Devices (MUTCD), Georgia Manual on Drainage Design for Highways, Utility Accommodation Policy and Standards Manual, GDOT Bridge Design Memos and the Bridge and Structural Design Manual, and the Department's Current Plan Preparation Guide (PPG).

   Current Department design manuals and guidelines may be found at: http://www.dot.ga.gov/doingbusiness/PoliciesManuals/roads/Pages/default.aspx. Ensure Project designers consider all elements of the design, including but not limited to roadway geometry, drainage requirements, traffic control during construction, erosion control, structural design, utility conflicts, signing and marking, and future maintenance requirements.

4. Design Reviews: The design is to be prepared under the direct supervision of licensed design professionals. A Professional Engineer licensed to practice engineering in the State of Georgia on the design team seals the final plans. The seal on the drawing represents certification the design meets all applicable codes and is of good engineering practice and standards. Check and certify the design.

   The Department will establish dates and times for cursory reviews and will comment on design work, but will not require hold points on the design, review periods, or comment responses, except as noted otherwise. If at any time the Department determines the design work is not in conformance with the Department's standards, details, specifications, or good engineering practice, the Department reserves the right to stop work, at the Contractor's expense until a resolution of the issue(s) has occurred.

   Submit construction documents (plans and specifications) shown in Table 4-1 to the Department for review and acceptance. Acceptance, disapprovals, or comments made by the Department will be provided in writing to the Contractor within the appropriate timeframes shown in Table 4-1.

   No construction is to begin on any phase of the work prior to the Department authorizing the various component(s) of the plans as Released for Construction. Other items shall be submitted to the Department by the Contractor, if requested. After the Department has accepted the plans and has authorized them as Released for Construction, any requests for any subsequent plan/design changes and include necessary documentation which supports the reasoning behind the change request must be submitted to the Department. The Department must approve the requested change with written notice prior to its implementation as a plan revision and subsequent construction activity.

   Facilitate monthly progress meetings at a venue and time determined convenient to the Department. The general purpose of these meetings are to update the Department staff on the status of design, current activities, issues, activities that the Department is currently performing, and other related matters that impact scope, schedule and budget. Provide the Engineer an agenda of items one week in advance of the meeting in order the

Engineer may arrange for the various GDOT Office reviewer(s) to attend, if necessary. Other attendees include the Contractor, design consultant, the Department's Project Engineer and Project Manager. Provide a call in number and conferencing capabilities to allow others to participate at the Department's discretion. Publish meeting notes of those discussions within two weeks of their occurrence and sent to all attendees and others indicated by GDOT. Ensure the first of these monthly meetings occur at the conclusion of the initial preconstruction conference.

ABBREVIATIONS FOR TABLE 4.1

AR	As Required
FS	Full-size paper – meets GDOT Plan Presentation Guide
HC	Hard Copy – 8 ½ x 11 unless otherwise noted
HS	Half-size paper – meets GDOT Plan Presentation Guide
MS	MicroStation File – Electronic
NTP	Notice to Proceed
PAS	Per Approved Schedule
PDF	Adobe PDF – One complete file and individual plan sheet files meets GDOT Electronic Plans Process

TABLE 4-1: REVIEWS

Submittal Description	Format	Quantity	Delivery Date*	Review Period*	Review Type	Comment
Basis of Design	HC, PDF	3, 1	NTP+7	14	Accepted by Engineer	
Schedule – including review times	HC, PDF	3, 1	NTP+14	30	Accepted by Engineer	
QC/QA Plan	HC, PDF	3, 1	NTP+14	21	Accepted by Engineer	
Environmental Comprehensive Compliance Plan	HC, PDF	3,1	NTP+30	30	Accepted by Engineer	
Right of Way Acquisition Plan	HC, PDF	3,1	NTP+30	30	Accepted by Engineer	
Worksite Utility Control Supervisor	HC, PDF	3, 1	PAS	21	Accepted by Engineer	
Worksite Erosion Control Supervisor Qualifications	HC, PDF	3, 1	PAS	21	Accepted by Engineer	
Traffic Control Supervisor Qualifications	HC, PDF	3, 1	PAS	21	Accepted by Engineer	
Construction Traffic Control Plan	FS,HS, PDF	3,3	NTP + 90	21	See Specification 150	
Preliminary Plans (including all roadway plan components, erosion control plans, signing and marking, lighting design, ITS, etc…)	HS, PDF	18, 1	NTP + 90	40	Accepted by Engineer	Incl overhead sign details/clearance Department to review, quantify environmental impacts and amend permit.
Final Plans (including all roadway plan components, erosion control plans, signing and marking, lighting design, ITS, etc…)	HS, PDF	18, 1	PAS	30	Accepted by Engineer	
Notice of Intent (NOI) with final/signed Erosion Control Plans	HS, PDF	3,1	PAS	NA	EPD letter stating plans do not contain deficiencies.	The Department will submit final/signed Erosion Control Plans to EPD for review prior to submittal of the NOI package to EPD. Contractor will address any plan changes required by EPD and to EPD's satisfaction.

TABLE 4-1: REVIEWS (Continued)

Submittal Description	Format	Quantity	Delivery Date*	Review Period*	Review Type	Comment
Preliminary Structures • Bridge Plans • Wall Layouts • Hydraulic Study	FS,HS,PDF,HC	2,3,1	PAS	30	Accepted by Engineer	See Section 999.3.C.3h and .i for information on hydraulic studies
100% Structures • Bridge Plans • Wall Plans • Design Notes	FS,HS, PDF,HC	2,3,1	PAS	15 per location or 75 days total	Accepted by Engineer	Bridge Office requires 15 days per bridge or wall location for review of plans. Each review period will not run concurrent with any other bridge or wall review period. Concurrent review of bridges and walls shall be limited to 75 total days.
Geotechnical Reports	HC, PDF	2,1	PAS	30	Accepted by Engineer	
Shop Drawings	FS	6	PAS	30	Accepted by Engineer	
Released for Construction Plans	FS, HS, PDF	9, 12, 1	PAS	NA	NA	Contractor shall provide the Engineer with one HS set for a backcheck prior to Release for Construction authorization.
Plan Revisions During Construction	FS, HS, PDF	1, 3, 1	Per Occurrence	21	Accepted by Engineer	Clear and concise supporting documentation justifying reason for proposed revision to be included with submittal.
As-Built Plans	See 999.3.A.8	See 999.3.A.8	Project Completion (+30)	30	Accepted by Engineer	

TABLE 4-1: REVIEWS (Continued)

Utility Submittal Description	Format	Quantity	Delivery Date*	Review Period*	Review Type	Comment
Supplemental verification of Overhead/Subsurface Utility Engineering (SUE) Investigations - QL-B • Electronic SUE files, mapping files and proposed design files • Certified half-size PDF • PDF of the certified SUE deliverables checklist	AR, MS PDF	1	NTP + 45 Calendar Days (Or as Determined by State Subsurface Utilities Engineer at the SUE Kick-Off meeting which is concurrent with the first utility coordination meeting)	NA	Submitted to the State Subsurface Utilities Engineer for information	Only certify SUE work actually completed
SUE Utility Impact Analysis "UIA" • Excel spreadsheet of conflict matrix • Certified color PDF (11x17) of conflict matrix • PDF showing the conflict locations on the utility plans • PDF of the certified SUE deliverables checklist	AR, PDF	1	NTP + 120 Calendar Days (Or as Determined by State Subsurface Utilities Engineer at the SUE Kick-Off meeting which is concurrent with the first utility coordination meeting)	NA	Submitted to the State Subsurface Utilities Engineer for information	Only certify SUE work actually completed
Overhead/Subsurface Utility Engineering (SUE) Investigations - QL-A • Electronic SUE files, mapping files (if not already provided) and updated proposed design files • PDF of the certified test hole forms • PDF of the certified SUE deliverables checklist	AR,MS,PDF	1	UIA + 45 Calendar Days	NA	Submitted to the State Subsurface Utilities Engineer for information	Only certify SUE work actually completed

TABLE 4-1: REVIEWS (Continued)

Utility Submittal Description	Format	Quantity	Delivery Date*	Review Period*	Review Type	Comment
Overhead/Subsurface Utilities Engineering (SUE) Information to Utilities for Review (URPN Letter 1a - SUE Submit to Utility Companies Revise)	FS,HS,PDF, MS	Plans: 2 for each Utility Owner +3 for Dept. and MicroStation files	NTP + 5 Calendar Days (Or as Determined by District Utilities Engineer at SUE Kick-Off meeting)	5 days for Dept. + 30 days for each Utility Owner	Reviewed by District Utilities Office (DUO) SUE Verification by Utility Owner (According to the details contained in the MOUs)	
Relocated Utility Plans (URPN Letter 2 - 2nd Submission Letter (Existing and Proposed))	FS,HS,PDF, MS	Plans: 2 for each Utility Owner +3 for Dept. and MicroStation files	Concurrently w/ Accepted SUE Verification by Utility Owner	5 days for Dept. + 90 days for each Utility Owner	Reviewed by District Utilities Office (DUO) and Accepted by Engineer Proposed Relocation by Utility Owner (According to the details contained in the MOUs)	
Preliminary Utility Status Report (URPN Letter 6 - Notice to Proceed with Permit)	HC, PDF	3, 1	Concurrently w/ Accepted Relocated Utility Plans	10- days + 5 days	Reviewed by District Utilities Office (DUO) and Accepted by Engineer Accepted by State Utilities Preconstruction Engineer	
Utility Plans/Agreements (Utility NTP Letter)	Plans/ Agreements HS,PDF,MS	Agreements: 3 hard copy, 1 electronic pdf Plans: 2 for each Utility Owner + 3 for Dept. and MicroStation files	Concurrently w/ Accepted Relocated Utility Plans	Agreements: 30 days for Dept. + 60 days for each Utility Owner Plans: 30 days	Relocation Plans and Agreements reviewed by Department Utilities Office. Agreements also reviewed by Utility Owner.(According to the details contained in the MOUs)	

*All days are "Calendar Days.", as defined in section 101, Standard specifications

All Submittals shall be made directly to the Engineer. The Engineer shall provide submittals to the applicable GDOT Office Reviewer and/or other applicable entities as directed by the Engineer, unless otherwise noted or discussed with the Contractor. As accepted by the Engineer the Contractor may provide submittals to applicable offices for a concurrent review. **Hand-deliver submittals, track and regularly update the Engineer on review status**. In the event concurrent submittals are required, the "receipt" date shall be the date the last recipient receives the submittal and shall be the contractual begin date for the review. Unless a different review time is specified elsewhere in the contract, a period of **thirty (30) calendar days** from receipt to release of the submittal by the Department shall be allowed for the Department's review. Engineer's (Department's) acceptance as to completeness is required for all reviews. All Contractors' schedules shall reflect the review times contained within the specifications and contract. Engineer's receipt of submittals will mark the beginning of the review period. All submittals by the Contractor shall be required to contain a statement certifying that no unapproved design-exceptions have been incorporated in the submittal. Errors and omissions are the responsibility of the Contractor to correct and shall be at the Contractor's expense.

Any submittal received by the Engineer after 12 PM (noon) shall be considered as being received the following business day.

Monthly progress meetings will be held at the project location if requested by either the Contractor or the Department. Attendees shall include the Contractor, design consultant, the Department's project engineer and design liaison, and may also include a representative from various Department Offices.

5. Field Surveys: Verify all provided survey data and update to current Electronic Data Guidelines (CAiCE). Provide terrain and drainage cross sections, pavement elevations, and drainage structure information for this Project. Provide all survey data noted in English units. All supplemental field survey information is to be completed in accordance to the GDOT *Automated Survey Manual.*

6. Quality Control/Quality Assurance for Design: The Department, except where noted otherwise, will have oversight responsibilities only and will not perform official reviews and approvals of design work. The Department will not take any approval or formal review actions on design issues except as noted herein or for deviations from the intended scope of the Project.

   Employ only persons duly registered in Georgia in the appropriate category in responsible charge of supervision and design of the work; and further, employ only qualified, State of Georgia registered land surveyors in responsible charge of any survey work.

   Use only a consultant design team prequalified by the Department in all applicable area classes as described in the SOQ. Should a member of the Contractor's Team need to be replaced, the Department must approve of the change prior to the Project letting. Failure to secure approval of the replacements prior to letting may result in the disqualification of the Contractor's bid.

   Endorse all final reports, contract plans and survey data. These endorsements shall be made by a person(s) duly registered in the appropriate category by the Georgia State Board of Registration for Professional Engineers and Land Surveyors, being in the full employ of the Contractor and responsible for the work prescribed in the contract.

   Authorized representatives of the Department may review and inspect the Project activities and data collected at all times. All reports, drawings, studies, specifications, estimates, maps and computations prepared by or for the Contractor shall be available to authorized representatives of both the Department for inspection and review. The Department's review comments are to be incorporated into the plans by the Contractor or as agreed. These changes shall not result in an increase in cost.

   Before the start of the contracted design effort, develop and acquire the Department's approval for a QC/QA Plan to ensure all design documents are prepared in accordance with the Department's Plan Presentation Guide (PPG) for MicroStation V8i using good, prudent and generally accepted design and engineering practice. Also see the Department's Manual of Quality Standards for Consultant Services.

   a. Ensure the QC/QA Plan includes the following, which shall be considered minimum requirements:

      1) Quality control and quality assurance procedures for design documents specify measures to be taken by the Contractor to (A) ensure appropriate quality standards are specified and included in the design documents and to control deviations from such standards, being understood and agreed no deviations from such standards be made unless they have been previously accepted by the Department, and (B) for the selection of suitable materials and elements of the Work included in the Project.

      2) Quality control and quality assurance procedures for preparing and checking all plans, calculations, drawings and other items submitted to ensure they are independently checked and back-checked in accordance with generally accepted engineering practices, by experienced engineers. Identify the originator, checker and back-checker on the cover of all submittals. Ensure the Plans, reports and other documents are stamped, signed and dated by the responsible Georgia Registered Engineer where required under the contract documents, generally accepted engineering practices or by applicable laws. The

Contractor will submit a certified statement to ensure all reviews have been made.

3) Procedures for coordinating work performed by different persons within the same area, in an adjacent area or in related tasks shall ensure that conflicts, omissions or misalignments do not occur between drawings or between the drawing and specifications. These procedures allow for the coordination of the review, approval, release, distribution and revision of documents involving such persons.

4) All the persons proposed to be responsible for Quality Control and Quality Assurance procedures are to be listed as follows: Discipline, Name, Qualifications, Duties, Responsibilities and Authorities.

5) Designate all key personnel performing Quality Control and Quality Assurance functions as such and will not be assigned to perform conflicting duties.

All plan related documents produced during the contract period are to be maintained by the Contractor for the duration of the Contract organized, indexed and delivered to the Department (1) upon Final Acceptance of the Project or (2) even if incomplete, within seven (7) days of receipt of request from the Department. These documents include, but not limited to, the following items: design criteria, reports and notes, calculations, drawings, schematics, supporting materials, statement regarding accomplishment of reviews and others.

7. Released for Construction: Upon the Contractor's satisfactory completion of the items listed in 999.1.B, and upon written authorization from the Department the plans are Released for Construction, stamp each plan sheet with "Released for Construction" and include the authorization date. The Released for Construction plans are the official plans used for construction of the Project.

8. As-Built Plans: Upon completion of the Project construction, provide a complete As-Built set of plans to the Department in the following formats:

   a. Two (2) CD-ROMs or DVDs containing:

      1) all electronic design files, electronic calculations, etc.

      2) .pdf of each plan sheet – one sheet per file per standard naming convention as per the Department's Electronic Plans Process.

      3) .pdf containing the entire plan set

   b. One (1) hard copy of the design databook, and drainage calculations

   c. Two (2) full-size set of bond prints

   d. Two (2) half-size set of bond prints

   e. Provide a revised estimated summary of quantities and detailed estimate in the final As-Built plans

   Ensure all production and delivery of materials needed for Department review. Both a member of the design team, who is a Professional Engineer, and a member who is a Registered Surveyor, licensed to practice engineering in the State of Georgia shall seal the As-Built plans.

   All files are to conform to the criteria for the InRoads design platform found in the Department's Electronic Data Guidelines (EDG), most current version, found at: http://www.dot.state.ga.us/doingbusiness/PoliciesManuals/roads/Pages/default.aspx.

9. Ownership of Documents: The Contractor agrees all reports, drawings, studies, specifications, survey notes, estimates, maps, computations, computer files and other

data, prepared by or for the Project under the terms of this Agreement and delivered to the Department become and remain the property of the Department upon termination or completion of the work. The Department will have the right to use this information without restriction or limitation and without compensation to the Contractor other than provided for in this agreement.

Any use of these documents by the Department on any Project other than this one will be done without warranty by the Contractor/Design Consultant Team.

10. Insurance: In addition to the insurance requirements covered elsewhere, provide insurance coverage of the following types and amounts:

    a. Valuable Papers: Insurance in an amount sufficient to assure the restoration of any plans, drawings, field notes or other similar data relating to the work covered by the Project is required. Insurance is to be maintained in full force and effect during the life of this Agreement.

    b. Professional Liability (Errors and Omissions): Insurance in an amount not less than one million dollars ($1,000,000) per claim (with a maximum of $250,000 deductible per claim) during the agreement term and for a period of at least five (5) years after this Agreement is closed is required. Such a policy is to cover all of the Contractor's professional liabilities, whether occasioned by the Contractor, his employees, subcontractors or other agents, arising out of services performed under or in accordance with this Agreement.

11. Publication and Publicity: Articles, papers, bulletins, reports or other materials reporting the plans, progress, analyses or results and findings of the work conducted under this Agreement shall not be presented publicly or published without prior approval in writing from the Department. All releases of information, findings and recommendations shall include a disclaimer provision to be included in all published reports on the cover and title page in the following form:

    "The opinions, findings and conclusions in the publication are those of the author(s) and not necessarily those of the Department of Transportation, State of Georgia."

    Any information concerning the Project, including conduct, results or data gathered or processed, released by the Contractor without prior approval from the Department will constitute grounds for termination without indemnity to the Contractor. Information released by the Department or by the Contractor with prior written approval is to be regarded as public information and no longer subject to the restrictions of this Agreement. Information required to be released by the Department under the Georgia Open Records Act, Section 50-18-70, et seq., O.C.G.A., the restrictions and penalties mentioned set forth herein shall not apply. Any request for information directed to the Contractor, pursuant to the Georgia Open Records Act, is to be redirected to the Department for further action.

12. Copyrighting: The Contractor and the Department agree any papers, interim reports, forms and other material which are a part of work under this Agreement are to be deemed a "work made for hire", as such term is defined in the Copyright Laws of the United States. As a "work made for hire", all copyright interests in said works shall vest in the Department upon creation of the copyrightable work. If any papers, interim reports, forms or other material which are a part of work under the Agreement are deemed by law not to be a "work made for hire", any copyright interests of the Contractor are hereby assigned completely and solely to the Department. Publication rights to any works produced under this Agreement are reserved by the Department.

13. Patent Rights: If patentable discoveries or inventions result from work described herein, all rights accruing from such discoveries or inventions are the sole property of the Contractor. However, the Contractor agrees to and does hereby grant to the Department,

an irrevocable, non-exclusive, non-transferable and royalty-free license to practice each invention in the manufacture, use and disposition according to law of any article or material and in use of any method that may be developed as a part of the work under this Agreement.

B. Roadway

1. Preparation of Construction Plans

a. General Criteria: Ensure and use the most current design criteria at the time of advertisement, as determined by the Department, American Association of State Highway and Transportation Officials (AASHTO) Design Manuals for Arterial Streets, Rural, Urban and Interstate Highways, including those standards adopted by AASHTO and approved by the Secretary of Commerce, as provided by Title 23, United States Code, Section 109 (b), with the Department's Standards, Procedures, Plans, Specifications and Methods, and shall produce plans in accordance therewith.

b. Design Specifications and Guidelines: Design for roadways and intersections shall be in accordance with the current edition of AASHTO Design Specifications; the 1994 edition of the AASHTO Standard Specifications for Structural Supports for Highway Signs, Luminaries and Traffic Signals; and AASHTO Roadside Design Guide and the Department of Transportation Standard Specifications for Construction of Roads and Bridges, 2001 Edition, the 2008 Supplemental Specifications modifying the 2001 Standard Specifications. Plan and specifications shall conform to the requirements of the Highway Capacity Manual, current edition (T.R.B. Report No. 2).

Design work for inside interstate rights of way conforms to the interstate standards. Design for work outside interstate right of way conforms to AASHTO design standards for the appropriate classification and speed design. Several Design Exceptions have been approved for this Project. Any additional deviation from these design criteria requires a written design exception or variance, depending on the violation, to be approved prior to incorporating it into the work.

Utilize the following references as a minimum in the development of this Project in addition to the references listed above

1) Electronic Data Guidelines (EDG) – current version at time of advertisement (InRoads)

2) Plan Presentation Guide (PPG) – current version at time of advertisement (InRoads)

3) GDOT Design Policy Manual – current version at time of advertisement

4) Manual on Uniform Traffic Control Devices (MUTCD) by the U.S. Department of Transportation, Federal Highway Administration "FHWA" – current version at time of advertisement

5) Manual on Drainage Design for Highways by the Georgia Department of Transportation - current version at time of advertisement

6) Roadway and Bridge Standard Plans as of July, 2006 by the GDOT Road and Airport Design Office. Design and plan preparation in accordance with the Certification Acceptance authorized by 23 USC 117(a) for Administering Federal Aid Projects Not On Interstate System, dated June 1, 1990.

7) Guidelines for Processing Design Data in InRoads Design Guidelines (http://www.dot.state.ga.us/doingbusiness/PoliciesManuals/roads/software/Pages/INROADS.aspx) –- current version at time of advertisement.

8) GDOT Construction Standards and Details - current versions at time of advertisement

9) Pay Item Index by the GDOT State Transportation Office Engineer - current version at time of advertisement

10) Utility Accommodation Policy and Standards by the GDOT Utilities Office - current version at time of advertisement

11) GDOT Signing and Marking Design Guidelines – current version at time of advertisement

12) Traffic Signal Design Guidelines – current versions at time of advertisement

13) Other manuals of guidance which are standard procedures of the Department, (signal design, signing and markings, etc).

The above list is not intended to be all-inclusive. All references to the "current version" shall mean those in effect at time of advertisement. Any current editions written in metric units ensure "soft converted" to U.S. Standards Units. Any rounding shall be to the dimension that shall increase safety.

c. Erosion and Sediment Control Sheets: No land disturbing activities until the Control of Soil Erosion and Sedimentation Plan has been accepted by the Engineer; the NOI has been successfully submitted to EPD by the Department; EPD has issued a letter to the Department indicating the plan "does meet" current NPDES requirements; and the required waiting period of 14 days is observed.

Prepare the Erosion Sedimentation and Pollution Control Plans (ESPCP) in accordance with current Department practice, and in accordance with the requirements set forth in the NPDES General Permit No. GAR1000002 [August 2008]. NPDES General Permit Guidance may be found at: http://www.dot.state.ga.us/doingbusiness/PoliciesManuals/roads/Pages/DesignPolicies.aspx.

In addition, design the plans in accordance with the current version of Georgia Soil and Water Conservation Commission's Manual for Erosion and Sediment Control in Georgia (Green Book).

All required sediment and erosion control items, including but not limited to installation and maintenance, shall be paid for under CONSTRUCTION COMPLETE.

As contained within the Department's standard ESPCP General Notes (dated 8-26-2008 or more current), remove all references to the following statement: "The Erosion Sedimentation and Pollution Control Plan (ESPCP) is provided by the Department."

C. Bridges and Structures

1. Design Specifications and Guidelines:

   a. Design bridges and retaining walls in accordance with the AASHTO LRFD Bridge Design Specifications, Fifth Edition, 2010. Use the Design Memos for information regarding bridge design practice located at the internet address: http://www.dot.ga.gov/doingbusiness/PoliciesManuals/bridge/Pages/Memos.aspx.

   b. Use the Bridge & Structural Design Manual available on the R-O-A-D-S website: http://www.dot.ga.gov/doingbusiness/PoliciesManuals/roads/Pages/DesignPolicies.aspx.

   c. Use "Basic Drawings" where possible. Basic drawings and cells can be downloaded at the following internet address:

      http://www.dot.ga.gov/doingbusiness/PoliciesManuals/roads/software/Pages/BridgeEngineeringPrograms.aspx.

   d. Use MicroStation/J to prepare plans in accordance with the Office of Bridge and Structural Design's MicroStation Customization. These files include a folder structure that is required to be on C:\Drive along with the "Bentley" folder. Access the Bridge MicroStation Customization files at the internet address: http://www.dot.ga.gov/doingbusiness/PoliciesManuals/roads/software/Pages/MicroStation.aspx.

2. Bridge Foundation Investigation**:** The Contractor shall perform bridge and wall foundation investigations for all proposed walls and bridges to be constructed on this project. The investigation and reporting shall be prepared in accordance with the following:

   a. General:

      1) Perform field and laboratory testing and analysis, and prepare a report with foundation recommendations for the bridges and walls. Work is to be performed by qualified and experienced firms that are pre-qualified with the Department in Area Class 6.02.

      2) Perform work in accordance with AASHTO Standards and in general conformance with the Department's Geotechnical Engineering Bureau Foundation Drilling and Sampling Guidelines. Comply with all applicable Federal and State requirements.

   b. Field Investigation:

      1) Drill a minimum of one boring at each bent line and at each wall. Drill additional borings as necessary. Perform the following, as applicable:

         (a) Notify property owners prior to accessing their properties.

         (b) Obtain locations and clearance for all utilities within the area of the borings.

         (c) Provide traffic control and lane closures in accordance with the Department's Specifications.

         (d) Clearing and preparation of the boring site.

         (e) Obtaining and transporting water to the site.

         (f) Foundation drilling and sampling of soil and rock.

         (g) Obtaining accurate survey elevations.

         (h) Site cleanup, erosion control, and restoration.

2) Fill portions of all drill holes with drill cuttings after completion of drilling that are not subject to excavation for construction. Top off all drill holes through pavements with cold mix asphalt (unless subject to excavation) to the same depth as the existing pavement. Remove all drill cuttings, muddy water, slurry, and other debris deposited on pavements, paved shoulders, and other travel ways immediately when the areas shall be subject to traffic after the completion of drilling. Calculate elevations to an accuracy of one tenth (0.1) of a foot.

3) Do not provide copies of boring logs, plans, or field test reports to property owners or other parties without the permission of the State Geotechnical Engineer.

c. Laboratory Testing:

1) Perform laboratory testing on samples obtained from the field in accordance with applicable methods of AASHTO, ASTM, or GDT test procedures. Use a laboratory that possesses current AASHTO certification.

2) Furnish laboratory results as part of the Final Report.

d. Final Analysis and Report:

1) Perform a geotechnical analysis for this project and prepare geotechnical recommendations in the form of a final report to the Department's State Geotechnical Engineer for review, prior to foundation construction. Base the final report on the information collected from the field investigation, the plans, specifications, results of laboratory tests, and the analysis of all other available information.

2) Stamp and sign the final reports by a Professional Engineer registered in the State of Georgia. Provide two copies of the final report to the State Geotechnical Engineer.

3) Prepare the reports in general conformance to the Department's Geotechnical Engineering Bureau Report Preparation Guidelines, Department's Specifications, and in conformance with good engineering practice. Incorporate the following recommendations and additional recommendations as applicable

(a) Foundation types and allowable loads.

(b) Footing elevations.

(c) Pile minimum and estimated tip elevations.

(d) Drilled caisson tip elevations.

(e) Foundation installations in rock.

(f) Embankment construction, settlement, and slope angles.

(g) Treatment of groundwater conditions.

(h) Treatment of poor soil conditions.

(i) Construction effects on adjacent utility structures and remedies for any potential problems.

(j) Locations of Utilities for the purpose of identifying conflicts with retaining walls.

4) In the Final Report, include (as applicable) copies of boring logs, field notes, laboratory and field test results or summaries, photographs, special provisions, details and drawings, and other related information. Correct final reports with

errors and omissions, as determined by the State Geotechnical Engineer. Resubmit the corrected report at no additional cost to the Department.

5) Acceptance of the work by the Department will not relieve the Contractor of the responsibility for subsequent correction of errors or for the costs associated with work caused by negligent errors or omissions from work performed by the Contractor.

3. Hydraulic and Hydrological Study

The Contractor shall prepare a Tidal Hydraulic and Hydrological Study including scour analysis using the unsteady one-dimensional flow model UNET which in incorporated in the HEC-RAS model for the project. The Contractor shall also prepare a preliminary layout for the proposed bridge. All field survey data needed to complete the study including bathymetry of the channel and necessary ground survey shall be obtained by the Contractor. The extent of the survey data needed shall be determined by the Contractor.

The procedure and guidelines for preparing the Hydraulic Study are as follows:

a. The Contractor preparing the hydraulic study shall be prequalified in Area Class 4.04 and be able to demonstrate experience with coastal hydraulic modeling and tidal hydraulics.

b. The study shall be prepared according to the guidelines in Chapters 2 and 14 of the Manual on Drainage Design for Highways. Also, use the FHWA Manual HEC-25 “Highways in the Coastal Environment” for reference.

c. The bridge site shall be modeled for the 10, 25, 50, 100 and 500 year or overtopping upland storms with tidal influence. The effects of the design year, 100 year and 500 year or overtopping storm tidal surge shall be analyzed along with the appropriate upland stream flows.

d. The scour analysis shall be performed for the 100 year and 500 year or overtopping upland floods combined with the normal tidal influences. Scour analysis shall also be performed for the 100 and 500 year or overtopping tidal storm surges combined with the appropriate upland stream flows. These analyses shall be done using the equations in the FHWA Publication, HEC No. 18, “Evaluating Scour at Bridges”.

e. Real tide data shall be used to calibrate the hydraulic computer model. If this information is not available, tidal gages shall be placed where needed to obtain information needed to calibrate the model. This data shall be included in the study.

f. The high and low mean and spring tide elevations shall be provided at the bridge site and shall be included in the study.

g. Contents of the hydraulic study shall include but not be limited to the contents listed in Section 14.3.4 of the Manual on Drainage Design for Highways.

h. Provide a hard copy of the hydraulic study and preliminary layout on initial submittal for review.

i. Provide a cd or dvd with a .pdf version of the final hydraulic study. Also include the electronic files for the computer models on this CD. Provide five (5) half-size copies of the approved layout.

4. Plan Submittals

a. Preliminary Plans: Preliminary Layout (if required, see below) and Preliminary Wall Plans

b. Construction Plans: Submit complete bridge plans and complete wall plans

c. Shop Drawings.

d. Submit one (1) copy of the design calculations for each scheduled submittal.

e. Do not proceed with the final design of bridge plans until the preliminary plans have been accepted by the Department.

5. Preliminary Bridge and Wall Plans

a. Preliminary Bridge Plans

There are eight new bridges anticipated as part of this project. The following information is to be used in the development of the final plans:

1) The approved Preliminary Layouts for the bridge(s) currently proposed on this project are included in the contract documents.

2) The Contractor shall check the Preliminary Layouts supplied by the Department in the costing plans. This check shall verify all dimensions and clearances based on field measurements. Notify the Department of any discrepancies that may be present in the Preliminary Layouts. The Contractor can accept the Preliminary Layout as provided in the costing plans by notifying the Department in writing. Upon the Contractor's written acceptance of the Preliminary Layout, the Department will authorize the Contractor to proceed with final design of the bridge.

3) If the Contractor chooses to change the Preliminary Layouts provided in the costing plans and provide an alternate design, the Contractor shall prepare a Preliminary Layout for the Department's review and approval in accordance with the following guidelines for each bridge to be changed:

(a) The Contractor shall verify all dimensions and elevations in the field prior to preparing plans, ordering materials or building forms.

(b) Design the bridge replacement using prestressed concrete beams only. Steel beams will not be allowed.

(c) Do not increase stresses on existing bridge elements during staging.

(d) Design the substructure utilizing PSC pile end bents, PSC pile intermediate bents, and concrete intermediate bents with caps and columns with footings or drilled caissons. Tops of footings shall be a minimum of two feet below existing grade and possible roadway grades.

(e) Ensure minimum vertical clearances as shown in the Costing Plans over all travel lanes and shoulders. Contractor shall field survey the existing clearance over all travel lanes and submit the survey results to the Bridge Office along with the Preliminary Layout.

(f) Provide a typical section which indicates the following information:

- The center to center spacing of girders provided in the costing plans may be adjusted to optimize the beam design.
- Overhang or distance from outside edge of slab to center of exterior girder: This distance (overhang) shall meet AASHTO requirements, but shall not exceed 4'-7½" or one half of the adjacent beam spacing, whichever is less. Overhangs shall be a minimum width of one-half top beam flange plus 6 inches.
- Cross slope of the deck.

- Deck thickness between girders and deck thickness at the centerline of girder measured from the top surface of deck to top of the flange.
- Barrier location, height and width.
- Gutter to gutter and out-to-out dimensions.
- Location of the profile grade.

(g) In addition to the requirements above, provide the following:

- A plan view of the proposed structure indicating beginning and end bridge stations, construction centerline, profile grade line, bent skew angles, joint locations, station and skew of roadways crossing under the structure, width of roadways beneath the structure, gutter to gutter width of the bridge, out to out width of the bridge, distance from gutter to outside edge of deck, taper control stations, location of point of minimum vertical clearance, and location and magnitude of the horizontal clearances from edge of travel way beneath the structure to the face of intermediate bents.
- Stations and elevations along the centerline of construction at the intersection of the centerline of construction and the back face paving rest and centerline of bents. Provide profile grade elevations corresponding to the above stations.
- An elevation view of the proposed structure indicating the span length, location of fixed and expansion joints, profile of roadways beneath structures, vertical clearance from bottom of structure to roadway beneath, proposed bent locations, and existing ground profile.
- All horizontal and vertical curve data for the bridge and the roadway beneath the bridge.
- The location and elevation of the nearest bench mark. The nearest benchmark shall be within 300 feet of the bridge.
- A brief description of the proposed structure indicating span lengths, beam type(s), type of end bents, and type of intermediate bents, as applicable.
- Any drawing and/or narrative description of the construction scheme necessary to indicate how the bridge is to be built, including traffic handling sketches and temporary barrier locations.

b. Preliminary Wall Plans

Prepare Preliminary Wall Plans in accordance with the following guidelines:

1) The wall types are as follows:

(a) MSE (Mechanically Stabilized Earth)

(b) Cast-in-place concrete walls: Ensure design and construction in accordance with all GA Standards and Specifications.

2) An elevation view or wall envelope of the proposed wall drawn to a horizontal and vertical scale of 1:10 and indicating the following data:

(a) Beginning and end wall stations.

(b) Elevations on top of wall parapet, coping, or traffic barrier at the beginning and end of wall, at profile break points, and at least every 50 feet along the wall.

(c) Bottom of wall (top of footing) elevation necessary to maintain minimum berm requirements.

(d) Original ground profile.

(e) Proposed ground profile.

(f) Stations and offsets to ends of walls and locations where wall changes direction

(g) Stations and elevations along top and bottom of wall

4) All walls shall have a smooth plain concrete finish. All walls shall have a graffiti proof coating.

5) Roadway cross-sections in the vicinity of the wall that will indicate the existing and final slope behind the wall.

6) All retaining walls shall have a period of no settlement for 6 months before construction may begin on areas impacted by the retaining wall.

7) Typical sections for MSE walls shall include:

(a) Limit of special backfill (1'-0" beyond end of reinforcement)

(b) Reinforcement

(c) Facing

(d) Coping, parapet or barrier

(e) Back-slope and fore-slope

(f) Leveling Pad

(g) Bridge abutment

(h) Additional select backfill behind bridge abutment

(i) Concrete ditches

8) Project Plan and Profile sheets which indicate the following:

(a) Limits of right-of-way.

(b) Superelevation data.

(c) Horizontal and vertical alignment data.

(d) Horizontal offsets to face of retaining wall.

(e) Location and type of overhead signs which may be near retaining walls.

(f) Location of roadway lighting which may be near or attached to the retaining wall.

(g) Location and size of any drainage structures which will affect the retaining walls.

9) Any construction sequence requirements that will affect the construction of the walls and which will have to be accounted for in the preparation of retaining wall plans.

6. Final Bridge and Wall Plans

a. Additional Bridge Design Criteria

1) The Contractor's design professionals, in designing the bridge in this project, shall utilize the Department Bridge Geometric and Design Software to the maximum extent possible. Upon prior written approval by the Department, the Contractor's design professionals may be authorized to utilize its computer capabilities. The contractor's design professionals are required to verify results to obtain final design accuracy.

2) Design the bridge replacement for seismic performance zone 1

3) Use ASTM A 615 Grade 60 reinforcement.

4) Use Class D Concrete with a minimum 28-day concrete strength of 4,000 psi for superstructure concrete.

5) Provide a slab designed in accordance with AASHTO LRFD Traditional Method Article 9.7.3 proportioned to provide 2.75 inches of concrete cover over the top mat of reinforcing and 1 inch cover to the bottom mat of reinforcement (minimum deck thickness is 8.25 inches). Empirical design (LRFD 9.7.2) will not be allowed. Use the slab thickness determined for the portion of the bridge supporting the highway loading at all locations.

6) Use Class AA Concrete, with a minimum 28-day concrete strength of 3,500 psi, for substructure caps, columns, caissons, and footings. Use Class A concrete, with a minimum 28-day concrete strength of 3,000 psi, for all other substructure concrete.

7) Include 30 pounds per square foot in the design loads to allow for future paving.

8) If metal deck forms are used, include 16 pounds per square foot in the non-composite design loads.

9) Design and detail 1'-0" wide edge beams where the deck is to be discontinuous. Detail edge beams as provided in the Bridge Design cell library for the appropriate prestressed beam.

10) Place slab transverse and longitudinal reinforcing steel 2 inches from the edge of the slab and place the top mat of edge beam bars below the top mat of the deck steel. Do not use truss shaped bars in the edge beam. Extend stirrups from the edge beam into the slab.

11) Use protective platforms in accordance with Section 510 of the GDOT Specifications. Maintain a minimum of 16'-9" vertical clearance over all operational travel lanes and shoulders unless otherwise shown in the costing plans.

12) Use PSC h-piles (for pile bents), pile footings (PSC piles), spread footings or drilled caissons in the foundation design and construction. Selected foundation types shall be utilized in accordance with the approved Bridge Foundation Investigation (BFI).

(a) For spread footings – provide allowable bearing and embedment in accordance with the approved BFI.

(b) For drilled caissons – provide allowable bearing and embedment in accordance with the approved BFI.

(c) For pile foundations - provide allowable bearing and embedment in accordance with the approved BFI.

13) For prestressed beams, meet the following criteria:

(a) Design prestressed concrete beams with conventional strength concrete up to a maximum 28 day compressive strength of 9,000 psi.

(b) Design prestressed concrete beams with high performance concrete (HPC) for a maximum 56 day compressive strength over 9,000 psi up to 10,000 psi. The maximum design compressive strengths shall not exceed 10,000 psi.

(c) Design prestressed concrete beams for severe corrosive conditions in accordance with LRFD specifications.

(d) Design prestressed beams as simple spans.

(e) In calculation of prestressed girder section properties, do not utilize transformed area of bonded reinforcement.

(f) Use neoprene bearing pads at each end of the prestressed beams. Design the pads to account for transverse and longitudinal expansion and contraction.

(g) Use anchorage beds set for horizontal and vertical strand patterns of two inches center to center. Detail all straight and draped strands utilizing two inch spacing.

(h) Provide the minimum amount of reinforcing steel at beam ends as required by AASHTO LRFD specifications, Article 5.10.10.

(i) Detail beam lengths to 1/16 inch increments.

(j) Provide prestressed beam sheets with all the applicable details as shown on the “basic drawings.”

(k) Require the use of 10 inch wide concrete diaphragms.

b. Additional Wall Design Criteria

1) MSE Walls are to be constructed in accordance with Section 627 of the GDOT Specifications.

2) Concrete Retaining Walls are to be constructed in accordance with Section 500 of the GDOT Specifications.

c. Bridge and Wall Construction Plans

The Contractor shall arrange a meeting with the Department to specifically discuss how the plans will be prepared prior to beginning plan preparation on the project.

1) Prepare construction plans with all dimensions, notes and details necessary to construct the structure. As a minimum, include the following sheets:

(a) Plan and Elevation sheets that include:

- Plan view of the bridge,
- Elevation view of the bridge,
- Beginning and ending stations,
- North arrow,
- Location of fixed and expansion bearings,
- Location of the minimum vertical clearance of critical travel lanes,

- Existing Bridge Serial No., Existing Bridge ID No., Project No. Project PI No., and construction ID No. supplied by the Department.

(b) General Notes sheets that include:

- Notes for the following; Specifications, Reinforcing Steel, Chamfer, Existing Bridge Plans, Welding, Salvage Material, and others as necessary,
- Bridge Design Data,
- A summary of Bridge Consists Of,
- A summary of Traffic Data,
- A summary of Quantities (for information only)
- A list of Existing Utilities (if applicable),
- A list of Utilities

(c) Deck Plan sheets,

(d) Deck Cross-Section sheets,

(e) Bearing assembly sheets,

(f) Beam sheets,

(g) Miscellaneous sheets,

(h) Framing Plan and Substructure Layout sheets,

(i) End Bent/Abutment sheets,

(j) Intermediate Bent sheets,

(k) As Built Foundation sheets, and

(l) Bar Reinforcing Detail sheets.

Additional sheets may be necessary to show the details required for construction. Provide additional sheets at no additional cost when deemed necessary by the Department.

2) Provide the following details:

(a) On deck section sheets, provide one full-width section across the structure which indicates, at least, all the horizontal dimensions necessary to construct the bridge. Provide sufficient deck cross-sections to indicate the staging, location of the existing structure and location of any temporary barriers on the structure.

(b) Show as many sections as are necessary to detail the placement of reinforcing in the deck and barrier. Also, draw deck sections indicating edge beams, back walls, diaphragms, and end walls. Cut sections radially across the structure.

(c) Detail deck plan sheets with all longitudinal and transverse dimensions necessary to construct the bridge, including edge beam width, expansion joint widths, back wall or end wall locations, location of construction and expansion joints, and any other items that are necessary to construct the structure.

(d) All views, sections and details, except those in GDOT's standard bridge cell library, are to be drawn to scale. Draw deck cross-sections and intermediate

bent sheets “Looking Ahead”. If the end bents or abutments are drawn separately, draw bent/abutment one “Looking Back”, and draw the other end bent/abutment “Looking Ahead”.

(e) All details on the Plans shall be clear and legible. The Department will have the final say as to how a Project is to be drawn and will have the right to require additional drawings at no increase in Contract cost. Fully check the plans for completeness of content and accuracy before submittal to the Department for review.

3) Maintain and protect all utilities supported and in the area of the bridge during construction. Consider the installation of utilities in staging the construction of the bridge.

4) Groove the bridge deck in accordance with Section 500 of the Georgia Specifications.

7. Shop Drawings

Provide shop drawings in accordance with Department's Specifications. The Contractor’s engineer shall review and stamp approved all shop drawings as the Engineer of Record. After being stamped by the Contractor’s design engineer, the Department will review the shop drawings for conformance with the plans and specifications. Allow the Department a **30 day review period** upon receipt of the shop drawings for each submittal. Within 30 days of receiving Department approval of the plans, submit “stamped” project plans to utilities.

D. Utilities

1. Coordination Responsibilities: The Contractor shall have the responsibility of coordinating the project construction with all utilities that may be affected. Coordinating responsibilities shall include but not be limited to the following:

   a. The Contractor shall initiate early coordination with all Utility Owners located within the project limits. All Utility Coordination shall be performed to GDOT standards by a prequalified firm in Area Class 3.10 - Utility Coordination. Refer to the following website for a list of current prequalified firms:

      http://www.dot.ga.gov/doingbusiness/consultants/Pages/default.aspx

      The Contractor shall be responsible for the cost of Utility Coordination. Coordination shall include, but shall not be limited to, contacting each Utility Owner to advise of the proposed project; supplemental verification of the locations of existing utility facilities (including the employment of additional Overhead/Underground Subsurface Utility Engineering investigations (SUE) as described in section 999.3.D.3.c of this specification); and determining requirements for the relocation or adjustment of facilities.

   b. The Department and/or the Utility Owner shall be responsible for the cost of utility relocation (this may change according to the details contained in the MOUs), where they hold a property interest, and in accordance with the Department's "Utility Accommodation Policy and Standards Manual". Details are provided in the attached Memorandum of Understanding (MOU) executed between the Department and each Utility Owner.

   c. The Contractor shall endeavor to design the project to avoid conflicts with utilities when feasible, and minimize impacts where conflicts cannot be avoided (See Section 999.3.D.2.c). The Contractor shall submit to the Department a SUE Utility Impact Analysis (UIA) in the Department's prescribed format as specified in TABLE 4-1: REVIEWS.

   d. The Contractor shall coordinate and conduct a preliminary review meeting with the Utility Owners to assess and explain the impact of the project. The Department's Project Manager, District Construction Engineer (or designee), and District Utilities Engineer (or designee) shall be included in this meeting. Knowledge of the project environmental "Commitments/ Requirements" (Green Sheets) is essential for Utility Owners during their design phase. The Contractor shall provide the Environmental Commitments table, and any re-evaluation with all Utility Owners. Also, during the preliminary review meeting Utility Owners are particularly interested in the status of Right of Way acquisition and its direct effect on their relocation design. The Contractor shall develop a status report of the Right of Way acquisition process, for Utility Owners use in planning for relocations. The Contractor shall record the minutes for this meeting and distribute to all attendees for their review and concurrence.

   e. The Contractor shall research the property interests of each Utility Owner's facilities. If there is a dispute over property interests with a Utility Owner, the Contractor shall be responsible for resolving the dispute. The Contractor shall meet with the Department's District Utilities Engineer (or designee) to present the property interests information gathered. This information must be sufficient for the District Utilities Engineer (or designee) to certify the extent of the Utility Owner's property interests. The Department shall have final approval authority as to the Contractor's determination of whether the Utility Owner has property interests.

f. The Contractor shall prepare and submit to the Department a Preliminary Utility Status Report Concurrently with Accepted Relocated Utility Plans within 180 days after Notice to Proceed has been given for the contract (see TABLE 4-1: REVIEWS). This report shall include a listing of all Utility Owners located within the project limits and a recommendation as to the extent of each Utility Owner's property interests. This report shall include copies of easements, plans, or other supporting documentation that substantiates any property interests of the Utility Owners. The report shall also include a preliminary assessment of the impact to each Utility Owner.

g. Depending on the provisions stipulated in the Memorandum of Understanding (MOU – See Attached) between the Department and each Utility Owner the Contractor shall be responsible for one of the following Design Activities:

   1) The Contractor shall provide Utility Owners with design plans and Preliminary Utility Plans as soon as the plans have reached a level of completeness adequate to allow them to fully understand the project impacts. The Utility Owner will use the Contractor's design plan for preparing Utility Relocation Plans, cost estimates, and respective Utility Adjustment Schedules (UAS). If a party other than the Utility Owner prepares Utility Relocation Plans, there shall be a concurrence box on the plans where the Utility Owner signs and accepts the Utility Relocation Plans as shown.

   2) The Contractor shall prepare all engineering design, plans, technical specifications, cost estimates, and utility adjustment schedules required to perform the necessary utility relocations. The Contractor shall certify to the Department that the design package listed above has been reviewed and accepted by the each respective Utility Owner.

h. The Contractor shall be responsible for collecting the following from each Utility Owner that is located within the project limits: Certified Utility Relocation Plans including a letter of "no cost" where the Utility Owner does not have a prior right; Utility Agreements, certificates of eligibility, including cost estimate and Utility Relocation plans where the Utility Owner has a property interest; Letters of "no conflict" where the Utility Owner's facilities will not be impacted by the Project. The Contractor shall prepare and submit to the Department a Utility Retention Request for any utility which is to remain under the roadway within the construction limits.

i. The Contractor shall be responsible for determining if the Department has agreed to pay for in-kind relocations according to any approved Utility-Aid assistance package for publicly (government) owned utilities found within the project's limits (See the Department's (Policies & Procedures) TOPPS Policy #6863-11 for additional information regarding Utility-Aid). If the Department has approved Utility-Aid; it is the Contractor's responsibility to assemble the necessary information including any Utility Agreements in a final and complete form and in such a manner that the Department may approve the submittals with minimal review. Failure to submit such required Utility Agreements prior to the beginning of construction shall fully transfer the utility owner's obligations, as stated in the subject Utility-Aid assistance package, to the Contractor. Deductions to reimburse the Department for such obligations may be made from any current partial payment of the Lump Sum price.

j. The Contractor shall review all Utility Relocation Plans and Utility Agreements, Utility Estimates and certificates of eligibility to ensure that relocations comply with the Departments "Utility Accommodation Policy and Standards Manual". The Contractor shall review the utility plans to identify that there are no conflicts with the proposed highway improvements, and ensure that there are no conflicts between each of the

Utility Owner's relocation plans. The Contractor shall show all existing and proposed utilities on the cross sections and drainage profiles.

k. The Contractor shall compile, and submit to the Department all SUE deliverables, Utility Relocation Plans, SUE Utility Impact Analysis, Utility Adjustment Schedules, Utility Agreements, Utility Estimates (if estimates are provided by the utility owners), and Letters of "no conflict," as set forth above for the project. The Contractor is expected to assemble the information included in the Utility Agreements and Utility Relocation Plans in a final and complete form and in such a manner that the Department may accept the submittals with minimal review. The Contractor shall meet with the Department's District Utilities Office and the State Subsurface Utilities Engineer (or designee) for a SUE Kick-Off meeting (concurrent with the first utility coordination meeting) within 15 days of the Notice to Proceed to gain a full understanding of what is required with each submittal. The Utility Owners shall not begin their Utility Relocation work until authorized in writing by the Department.

l. Each Utility Agreement and Utility Relocation Plan submitted shall be accompanied by a certification from the Contractor stating that the proposed relocation will not conflict with the proposed highway improvement and will not conflict with another Utility Owner's relocation plan.

m. Depending on the provisions stipulated in the Memorandum of Understanding (MOU – See Attached) between the Department and each Utility Owner the Contractor shall be responsible for one of the following construction activities:

1) The Contractor shall be responsible for coordinating the work of its subcontractors and the various Utility Owners. The resolution of any conflicts between Utilities and the construction of the project shall be the responsibility of the Contractor. No additional compensation will be allowed for any delays, inconveniences, or damage sustained by the Contractor or its subcontractors due to interference from utilities or the operation of relocating utilities.

2) The Contractor shall be responsible for performing all utility removal, relocation, and adjustments required to accommodate the proposed project. This shall include any required inspection, permitting, testing and monitoring to ensure that the work is properly performed to the certified design package. The resolution of any conflicts between Utilities and the construction of the project shall be the responsibility of the Contractor. No additional compensation will be allowed for any delays, inconveniences, or damage sustained by the Contractor or its subcontractors due to interference from utilities or the operation of relocating utilities.

n. During the construction of the project, the Contractor shall designate, prior to beginning any work, a Worksite Utility Coordination Supervisor (WUCS) who shall be responsible for initiating and conducting utility coordination meetings and accurately recording and reporting the progress of utility relocations and adjustment work. Also, the WUCS shall prepare an Emergency Response Plan for the purpose of planning, training, and communicating among the agencies responding to the emergency. The WUCS shall be the primary point of contact between all of the Utility companies, the Contractor and the Department. The WUCS shall recommend the rate of reoccurrence for utility coordination meetings and the Engineer will have the final decision on the regularity for utility coordination meetings. In no case will utility coordination meetings occur less than monthly until controlling items of utility relocations and adjustment milestones are completed. The WUCS shall contact each of the utility companies for the purpose of obtaining information including, but not limited to, a Utility Adjustment Schedule for the controlling items of utility relocations and adjustments. The WUCS shall notify the appropriate utility company and/or utility

subcontractors and the Department of the status of controlling items of relocations and adjustment milestones as they are completed. The WUCS shall furnish the Engineer, for approval, a Progress Schedule Chart, prior to beginning Construction unless otherwise specified, which includes the utility companies controlling items of work and other information in accordance with Section 108.03 or elsewhere in the Contract documents. Duties and Responsibility of the Worksite Utility Coordination Supervisor, (WUCS):

1) Qualifications: The WUCS shall be an employee of the Prime Contractor, shall have at least one year experience directly related to highway and utility construction in a supervisory capacity and have a complete understanding of the Georgia Utilities Protection Center operations, and shall be knowledgeable of the High-voltage Safety Act and shall be trained on the Georgia Utility Facility Protection Act (GUFPA). The Department does not provide any training on GUFPA but will maintain a list of the Georgia Public Service Commission certified training programs developed by other agencies. Currently the following companies offer approved GUFPA training programs:

   Associated Damage Consultants
   Phone: 706.234.8218 or 706.853.1362

   Georgia Utility Contractors Association
   Phone: 404.362.9995

   Georgia Utilities Protection Center
   Phone: 678.291.0631 or 404.375.6209

   H B Training & Consulting
   Phone: 706.619.1669 or 877.442.4282 (Toll Free)

   The Prime Contractor is responsible for obtaining the GUFPA training for their employees.

   Questions concerning the Georgia Public Service Commission GUFPA training program shall be directed to:

   Georgia Public Service Commission
   244 Washington St. SW
   Atlanta, GA 30334-5701
   404.463.9784

2) Ticket Status: During the utility coordination meetings the WUCS shall collect and maintain the Ticket Status information to determine the status of all locate requests within the project limits. This information will be used to assure those planning to use mechanized equipment to excavate or to work within the project limits are prepared to begin work when they have reported or estimated beginning work. At points where the Contractor's or utility company's operations are adjacent to or conflict with overhead or underground utility facilities, or are adjacent to other property, damage to which might result in considerable expense, loss, or inconvenience, work shall not commence until all arrangements necessary for the protection thereof have been made.

3) Notice: The names of known utility companies and the location of known utility facilities will be shown on the Plans, or listed in the Overhead/Subsurface Utility Engineering Investigation if performed or in the Special Provisions; and the WUCS shall give 24-hour notice to such utility companies before commencing work adjacent to said utility facilities which may result in damage thereto. The

WUCS shall further notify utility companies of any changes in the Contractor's work schedules affecting required action by the utility company to protect or adjust their facilities. Notice to the utility companies by the Department of the Award of Contract, under Subsection 105.06, shall not be deemed to satisfy the notice required by this paragraph. Furthermore, this 24-hour notice shall not satisfy or fulfill the requirements of the Contractor as stated in Chapter 9 of Title 25 of the Official Code of Georgia Annotated, known as the "Georgia Utility Facility Protection Act".

4) Agenda**:** The WUCS shall cooperate with the companies of any underground or overhead utility facilities in their removal and relocations or adjustment work in order that these operations may progress in a reasonable manner, that duplication of their removal and relocations or adjustment work may be reduced to a minimum, and services rendered by those parties will not be unnecessarily interrupted. To promote this effort the WUCS shall prepare an agenda for the utility coordination meetings and circulate same in advance of the meeting to encourage input and participation from all of the utility companies. The agenda will be prepared by an examination of the project site and may include photographs of potential/actual utility conflicts.

5) Emergency Response Plan: The WUCS shall prepare and submit to the Department an Emergency Response Plan no later than 30 days prior to beginning construction. The WUCS shall clearly mark and highlight the gas, water and other pressurized pipeline shut-off valves and other utility services including overhead switch locations on the utility plans; and prepare a chart to indicate the location of each site (Street address or intersections), the utility company or operator of the facility with emergency contact information and the working condition of the device to facilitate prompt shut-off. The WUCS shall post the Emergency Response Plan in an area readily accessible to the Department. In the event of interruption to gas, water or other utility services as a result of accidental breakage or as a result of being exposed or unsupported, the WUCS shall promptly notify the appropriate emergency officials, the Georgia Utilities Protection Center and the appropriate utility facility company or operator, if known. Until such time as the damage has been repaired, no person shall engage in excavating or blasting activities that may cause further damage to the utility facility.

6) Submission: Provisions for reporting all utility coordination meetings, the progress of utility relocation and adjustment work milestones and ticket status information shall be reported on a form developed by the WUCS and will be distributed by the WUCS to all of the utility companies as milestones are met and shall be included as part of the project records. These reports shall be delivered to the Engineer for review, on a monthly basis. The WUCS shall immediately report to the Engineer any delay between the utility relocation and adjustment work, the existing Utility Adjustment Schedule, or the proposed Utility Adjustment Schedule so that these differences can be reconciled.

7) Utility Adjustment Schedule**:** The purpose of the Utility Adjustment Schedule is to provide the Contractor with the pertinent information, including any utility staging required, dependent activities, or joint-use coordination that is required for the creation of a progress schedule chart that is feasible. A suitable Utility Adjustment Schedule form is available from the Department for the WUCS to circulate to utility companies for any proposed Project construction staging. Ensure the WUCS submits the Progress Schedule Chart in accordance with Section 108.03 and the proposed Utility Adjustment Schedules from all utility companies to the Engineer for review and approval.

o. At the time the Contractor notifies the Department the Contractor deems the Project to have reached Final Completion, the Contractor shall certify to the Department that all Utilities have been identified and that those Utility Owners with property interests or other claims related to relocation or coordination with the Project have been relocated or their claims otherwise satisfied or shall be satisfied by the Contractor.

p. The Contractor shall show the final location of all utilities on the as-built drawings for the project as stated in Section 999.3.A.8.

q. In addition to the above, the Contractor shall comply with all provisions set forth under subsection 107.21 of the Georgia Department of Transportation's Specifications, Construction of Transportation Systems, current edition.

r. The Contractor shall be responsible for determining if the Department has agreed to a Project Framework Agreement (PFA) with Local Government or, additional Specific Activity Agreements (SAA) within the project's limits (See the Department's (Policies & Procedures) TOPPS Policy #7120-3 for additional information). If the Department has approved a PFA or SAA; it is the Contractor's responsibility to assemble the necessary information including any Utility Agreements in a final and complete form and in such manner that the Department may approve the submittals with minimal review. Failure to submit such required Utility Agreements prior to the beginning of construction shall fully transfer the obligations, as stated in the subject PFA or SAA package, to the Contractor. Deductions to reimburse the Department for such obligations may be made from any current partial payment of the Lump Sum price.

2. General

a. By Georgia Statues, utilities whether public or privately owned, aerial or underground, are permitted by the Department and local governments to be accommodated within the public right of way. To this end, the Contractor needs to make every effort to design/build a project that will accommodate (and minimize impacts to) all existing utilities and new utilities to be constructed concurrently with the project. The selection of typical section features, horizontal alignment, and location of storm sewer lines are design elements that can sometimes be varied without violating safety standards, and accepted design principles. Design/construction techniques that minimize or avoid utility conflicts may involve increased upfront costs; however, those costs are offset by savings during construction, in addition to the total cost savings for the project (the Department or local government) and the respective utility owners.

b. Additional guidance for accommodating utilities within the right of way are given in the AASHTO publications: A Guide for Accommodating Utilities within Highway Right of Way, A Policy on Geometric Design of Highways and Streets; the TRB publication: Policies for Accommodation of Utilities on Highway Rights-of-Way; and in GDOT's Utility Accommodation Policy and Standards, current edition.

c. The Utility Plans are used as the primary tool to identify and resolve utility related conflicts/issues prior to beginning the construction of a project. Also, when these plans are properly prepared as indicated in this Special Provision; they will support the vital coordination required between the Contractor and the Utility Owner during construction. Existing utility information shown on the utility Plans for this project have been obtained from an Overhead / Subsurface Utility Engineering (SUE) Investigation (please refer to 999.3.D.3.c. for more information on SUE). This existing utility information has been provided by the Department for the Contractor's use in the design and construction of this project. However, the Contractor shall be responsible for supplementing this utility information for utilities that have been installed after the Overhead / Subsurface Utility Engineering (SUE) Investigation was

performed. Known utilities and contacts are shown in the Costing Plans Package. This information shall be verified by the Contractor.

d. Utility plan sheets are comprised of completed roadway plan sheets but shall contain more detailed information featuring existing and proposed utility facilities. Specific requirements for Utility Plans are detailed below.

3. Required Information

a. Preliminary Utility Plans

1) Preliminary Utility Plan sheets are typically comprised of preliminary roadway plan sheets with the inclusion of all existing utility facility locations (overhead & underground) found within a project's limits. Determining the location of the existing utilities shall be accomplished through an Overhead/Subsurface Utility Engineering Investigation. The "degree of effort" exerted on the part of the Department and the Utility Owner varies with the type and location of the utility. The Department has classified these "degrees of effort" into different Quality Levels of information. Refer to 999.3.D.3.c. for definitions of these Quality Levels.

2) Preliminary Utility Plans shall be produced and used by the Contractor in the utility coordination/relocation design activities outlined here and under Section 999.1. The following minimum information shall be shown on the Preliminary Utility Plans:

(a) Construction centerlines with Project stations and begin/end Project limits.

(b) Curb and gutter or edge of pavement (proposed and existing)

(c) Road and street names

(d) Existing and Required Right of Way limits, property lines, environmentally sensitive area limits, and property owners.

(e) All proposed and existing easements (including existing utility easements)

(f) Proposed and existing drainage structures/features (excluding drainage text)

(g) Proposed construction limits (C/F lines)

(h) Topographical planimetrics (i.e. existing buildings/structures, existing tree/vegetation limits)

(i) All proposed bridges, walls, other structures and landscape hardscapes.

(j) All proposed and existing strain poles (signal, sign, lighting)

(k) Utilities Legend

(l) Miscellaneous General Notes

(m) Existing overhead and underground utilities found within the Project's limits, Including size and material if known.

(n) Sanitary sewer manhole top, and invert elevations. Sanitary Sewer pipe flow directions

(o) Railroad mainline and spur tracks with their respective property/easement limits

(p) Project Survey control point locations

(q) SUE specific General Notes

(r) Utility Pole Data Table

(s) SUE investigation Limit of study

(t) SUE Quality Level A information

b. Final Utility Plans

1) Final Utility Plans consist of all the elements provided for in the Preliminary Utility Plans, but also show all proposed utility adjustments required to accommodate the Project.

2) The proposed utility information shall either be provided to the Contractor by each of the respective Utility Owners, Refer to Section 999.3.D to determine how proposed utility relocation design information is to be provided. In either case, The Contractor shall compile and incorporate this information into the project's Final Utility Plans.

3) The proposed utility work for this project shall either be performed by the Utility Owner or their designated contractor, or included as part of the project's construction contract. Refer to Section 999.1.C or to the Memorandum of Understanding (MOU) to determine who is responsible for the proposed utility relocation work for this Project.

4) In either case, the Final Utility Plans shall clearly show all existing, proposed, temporary, and relocated utilities on the plans and clearly indicate the disposition of all existing utilities: for example, "To be removed", "To be Adjusted", "To be Abandoned", "To Remain", "To be Relocated", etc. The plans shall also clearly define utility work as to which is to be done by the Contractor and which is to be done by others. Utilities to be relocated (or removed, or installed) prior to construction shall be labeled on the plans as "To be relocated (or removed or installed) by others prior to project construction".

5) When proposed utility work is included as part of the project's contract, it is necessary for a Summary of Quantities to be included within the Final Utility Plans. The Summary of Quantities shown in the Final Utility plans shall be prepared in the same basic format as indicated in Section 999.3.B.

6) Where extensive or complex utility work is proposed to be performed, separate Utility Relocation Plan Sheets for that specific utility may be required to ensure plan legibility/constructability. The Contractor shall determine whether separate Utility Relocation Plans are needed. However, after review of the plans, the Engineer may require these additional sheets or drawing inserts to be included in the project plan package.

7) In addition to the information required for the Preliminary Utility Plans, the Final Utility Plans shall include the following:

(a) All proposed and temporary utility facilities with annotation describing nature of work.

(b) Miscellaneous General Notes required for coordination of utility facilities with roadway construction.

(c) Proposed water and sanitary sewer plan/profiles.

(d) Summary of Quantities for contract items (if applicable).

(e) Any proposed utility easements.

(f) Any miscellaneous proposed utility details.

c. Overhead/Subsurface Utility Engineering (SUE) Investigations

Employ an established engineering technology that can provide precise horizontal and vertical locations of underground and overhead utilities to produce an accurate picture of the underground and overhead utility infrastructure. The existing utility information provided in these investigations includes a description of what “degree of confidence” there is in its accuracy. The Department has classified these “degrees of confidence” into different Quality Levels of information:

1) Quality Level "D" Information - Information obtained solely from a review of utility records and field verification. The comprehensiveness and accuracy of such information is highly limited. Even when existing information for a utility in a particular area is accurate, there are often other underground systems that are not shown on any records. Quality Level “D” may be appropriately used early in the development of a Project to determine the presence of utilities.

2) Quality Level "C" Information - Information obtained to augment Quality Level “D” information. This involves topographic surveying of visible, above-ground utility features (e.g., poles, hydrants, valve boxes, circuit breakers, etc.) and entering the topographic data into the CADD system. Since aerial utility lines are not surveyed, information provided for these facilities is considered Quality Level “C” also. Quality Level “C” may be appropriately used early in the development of a Project and shall provide better data than Quality Level “D” information alone. Designers shall be very cautious when working on Projects using information for underground utilities that is based only on Quality Levels “D” and “C” locates.

3) Quality Level "B" Information - Information obtained through the use of designating technologies (e.g., geophysical prospecting technologies). This is an application using scanning technologies, most of which have very specific capabilities. Applying a variety of techniques is essential to the process of preparing a comprehensive horizontal map of utilities and other underground structures on the site. Designating technologies are capable of providing good horizontal information.

4) Quality Level "A" (Test Hole) Information - Provides the highest level of accuracy of utility locations in three dimensions. This level may apply manual, mechanical or nondestructive (e.g., vacuum excavation) methods to physically expose utilities for measurement and data recording. Quality Levels “B”, “C”, and “D” locates are incorporated in Quality Level “A” locates.

5) The Contractor shall identify all utility conflict points where verified existing utility information is necessary to avoid/minimize/identify the respective utility conflict. The Contractor shall obtain Quality Level “A” locates at these project/utility conflict points, and shall coordinate with the Utility Owners and make every effort to avoid existing utility facilities and thereby reduce utility relocations.

6) All Overhead/Subsurface Utility Engineering (SUE) shall be performed to GDOT standards by a prequalified firm in Area Class 5.08. Refer to the following website for a list of current prequalified firms:

http://www.dot.ga.gov/doingbusiness/consultants/Pages/default.aspx

4. Sheet Layout

a. The Contractor needs to ensure that any information and graphic data that is not necessary to depict the disposition of utilities found within the project’s limits is removed by turning off the appropriate CADD levels(s) on which the data is stored. This will help ensure that information pertinent to utility facilities can be clearly seen in the Utility Plan sheets. Examples of extraneous information would be items such as horizontal curve data, superelevation data, roadway dimensions, misc. text, etc. All

background information such as pavement limits, existing structures, etc. shall be screened back. Also, the Contractor shall ensure all text, line work, details, and symbols are clear and legible when plans are reduced to ½ size.

b. In order to maintain plan clarity all applicable general notes, tables, and the Utility Legend shall be placed separately from the Utility Plan sheets. A Utility Plan "Cover Sheet" shall be provided for both preliminary and final Utility Plans. A recommended example utility sheet schedule is provided below:

1) Utility Sheet 1 (Cover Sheet) – Utility General Notes, Utility Legend, Miscellaneous Details

2) Utility Sheet 2 (required as needed) – Additional Miscellaneous Details, Pole Data Table

3) Utility Plan Sheets – Utilities shown in plan view with respect to Project.

4) Utility Profile and Cross Sections Sheets - Proposed Utility facility profiles and cross sections (as required)

5) Miscellaneous Utilities Sheets – Miscellaneous proposed utility details (as required).

The above sheet schedule shall also be generally followed for all separate utility relocation plans (i.e. water & sewer plans) included in the Project plans.

5. Miscellaneous Notes and Other Information

a. Note on the Utility Plans whose responsibility it is for utility adjustment. For bridge plans required, the Contractor is to make sure the plans have made accommodations for utility crossings and attachments, if applicable. Any new utility crossings requests shall include the size, weight, and type of utility. In addition, the method of attachment to the bridge shall be fully detailed. Such requests shall be reviewed by the Contractor to ensure adequacy and constructability and final approval shall be obtained by the Contractor from the Department. The Contractor shall follow the approval process within this specification. The Contractor is responsible to ensure that all proposed and existing utilities are coordinated with the respective project's Construction Staging Plans and Erosion Control Plans.

b. Upon completion of the Utility Relocation Plans, the Contractor needs to ensure that any additional environmental impacts due to utilities are addressed in the project's environmental document/permit.

E. RAILROAD

1. General Requirements

   a. This section defines the criteria required for addressing impacts to established railroad right of way (ROW) within or adjacent to the Project limits. Any activity that penetrates or encroaches on the horizontal plan limits of established railroad ROW shall be considered as impacting the railroad ROW. Such activities could include, but are not limited to:

      1) Construction and/or removal of at-grade crossings (temporary or permanent);

      2) Overhead or underground utility encroachments on railroad ROW; including construction of temporary bore and jack pits;

      3) Protection of existing railroad facilities during Project construction activities; including protection from crane booms or other equipment with potential for fouling live track(s);

      4) Construction of Project facilities, such as bridges and/or roadways, across or adjacent to established railroad ROW;

      5) Temporary and/or permanent modifications to existing railroad facilities in connection with Project objectives.

   b. If the Project includes impacts to existing railroad ROW as defined herein, the Contractor's Project Management Plan (PMP) shall set forth detailed procedures and methods for addressing those impacts.

   c. The term "railroad" shall be understood to mean the owning railroad(s) and/or the operating railroad(s), in the event that more than one such entity owns or operates within the impacted corridor.

   d. The railroad or its authorized representative shall have final authority in all matters affecting the safe maintenance of railroad traffic and facilities including, but not limited to, determining impacts to its ROW; determining adequacy of structures and foundations supporting railroad track(s) and/or embankment(s); approving procedures for work to be performed over its track(s); and determining the necessity for flagging protection during construction.

   e. The proposed project contains the design and construction of a new bridge that spans over the existing Central of Georgia Railroad Company/Norfolk Southern Corporation at railroad milepost PW-1.5.

2. Railroad Design Standards

   a. The design of the Project shall be in accordance with GDOT and Railroad approvals.

   b. Contractor's design shall, as a minimum, preserve the current operational characteristics of existing rail lines and shall be capable of accommodating the future operational needs of the railroad.

   c. At highway-rail grade crossings, the roadway and drainage design parameters shall be maintained at the crossing, except that the cross slope of the pavement may be transitioned to match the grade across the rail line.

3. Design Railroad Live Load

   Contractor shall design any permanent or temporary facilities that could be subjected to train loadings from existing or future tracks, including but not limited to false work, temporary shoring, temporary crossings or structures, shooflies, culverts, bore and jack pits, etc., in accordance with applicable provisions of the current edition of the Manual

for Railway Engineering as published by the American Railway Engineering and Maintenance-of-Way Association (AREMA Manual). The governing design railroad live load for such facilities is the Cooper E-80 live load as specified in Chapter 15, Section 1.3.3 of the AREMA Manual.

4. Design Lateral Pressures for Railroad Live Load Surcharge

   Permanent and temporary facilities supporting railroad embankment excavation shall be designed for lateral pressures resulting from railroad live load surcharge. The Boussinesq equation as shown in Chapter 8, Part 20, Section C, Paragraph 2(b) of the AREMA Manual shall be used to determine lateral pressure values for railroad live load surcharge loading.

5. Clearances

   Wherever practicable, overhead bridge structures shall have all piers and abutments located outside of the railroad ROW. Overhead bridge structures shall otherwise provide the horizontal and vertical clearances specified herein for existing tracks and drainage ditches. If future tracks and drainage ditches have been designated by the railroad in the project area, the clearances specified herein shall apply to those tracks and ditches as well.

6. Permanent Clearances

   a. Minimum horizontal clearance from centerline of track to face of nearest bridge substructure unit shall be 25’-0”. Horizontal clearance less than 25’-0” shall not be used without written approval from the railroad. Bridge substructure units and MSE walls located less than 50’-0” from centerline of track shall be designed in accordance with LRFD Article 3.6.5. Bridge substructure units located less than 25’-0” from face of pier to centerline of nearest track shall be designed with crash wall protection. Edges of footings shall not be closer than 13’-0” from centerline of nearest track to provide adequate room for shoring.

   b. Horizontal clearances must provide sufficient space for construction of the required track ditch parallel to the standard roadbed section. Bridge substructure units and end slopes shall be located so that they do not interfere with track drainage ditches, and horizontal clearances shall be increased as necessary to accommodate such ditches. Where special conditions make this impossible, an explanation of such conditions must be submitted, along with supporting plans and calculations, to the railroad for approval.

   c. Minimum vertical clearance measured from top of high rail to lowest point of structure in the horizontal clearance area shall be 23’-0”. Existing top of rail profile shall be plotted on Contractor’s plans for at least 500 ft. on either side of the proposed overhead bridge crossing. If the profile contains a sag vertical curve at the proposed overhead bridge location, the vertical clearance from the top of rail to the proposed overhead bridge shall be increased sufficiently to permit future raising of the track to minimize or eliminate the sag per the railroad’s direction. Contractor shall coordinate with railroad accordingly and obtain written approval from railroad of the proposed overhead bridge profile prior to performing final design.

   d. Proposed vertical and horizontal clearances shall be adjusted so that the sight distance to railroad signals is not reduced, unless the signals are to be relocated as a part of the project.

   e. On structures to be rehabilitated or replaced, the proposed minimum vertical and horizontal clearances as well as the existing clearances shall be indicated on the General Plan and Elevation sheet.

f. The permanent clearances shall be correlated with the methods of construction so that temporary construction clearances will not be less than the minimum allowed.

7. Temporary Clearances

   a. Falsework and formwork above or adjacent to operated tracks shall conform to the following:

      1) Maintain minimum vertical clearance of 23’-0” above top of high rail.

      2) Maintain minimum horizontal clearance of 13’-0” from centerline of tangent track or 14’-0” from centerline of curved track.

   b. Minimum temporary clearances, if less than required minimum permanent clearances, shall be indicated on the General Plan and Elevation Sheet.

   c. Temporary clearance requirements shall also apply to all other physical obstructions including, but not limited to: stockpiled materials, parked equipment, placement or driving of piles, and bracing or other construction supports.

8. Crashwalls

   a. Chapter 8, Article 2.1.5 of the AREMA Manual covers requirements for crashwalls. Crashwalls are required when any portion of the face of a pier is closer than 25’-0” to centerline of track (including future tracks), measured perpendicular or radial to the track.

   b. Crashwalls for single column piers shall be a minimum of 2’-6” thick and shall extend a minimum of 10’-0” above the top of high rail. Crashwall shall extend a minimum of 6’-0” beyond the column on each side in the direction parallel to the track. The face of the crashwall shall extend at least six (6) inches beyond the face of the column on the side adjacent to the track.

   c. For multi-column piers, the columns shall be connected with a crashwall with a minimum thickness of 2’-6”. Crashwall shall extend a minimum of 10’-0” above the top of high rail and shall extend a minimum of 2’-6” beyond the end of outside columns in a direction parallel to the track. The face of the crashwall shall extend at least six (6) inches beyond the face of the columns on the side adjacent to the track.

   d. Reinforcing steel to adequately anchor the crashwalls to the column and footing shall be provided.

   e. Crashwalls may be omitted for piers of heavy construction as defined by the aforementioned AREMA Manual requirements.

9. Drainage

   a. The bridge and roadway plans should indicate all proposed drainage encroachments on railroad ROW.

   b. Drainage plans must be included with the bridge and roadway plans submitted to the railroad for approval. These plans must include hydrologic computations, indicating the rainfall intensity and duration of the design storm used, as well as the method of analysis. A 100-year recurrence interval is the minimum design storm. If the proposed project will not change the quantity and/or character of flow in the railroad’s ditches and/or drainage structures, the plans shall include a general note stating thus.

   c. Cross sections perpendicular to the centerline of track shall be submitted along with the drainage plans. Maximum interval of cross sections shall be 20’ along the affected length of track; however, at least 5 cross sections shall be submitted for each bridge site, and additional cross sections shall be provided if warranted by special conditions. One cross section shall be taken at the centerline of each road

crossing, one at each limit of construction, and one located midway between each end and the center. The existing railroad ditch and the proposed toe of slope for the end fill shall be shown and located on all cross sections.

d. Where the project design calls for an increase in the drainage flow through the railroad embankment, a separate, drainage structure parallel to existing drainage structure(s) shall be provided for such purposes. Structure shall be designed and constructed per the AREMA Manual.

e. When the proposed project will change the quantity and/or character of flow in the track ditches, the ditches shall be modified as required to handle the drainage. The ditch design shall be submitted to the railroad for approval.

f. No scuppers or other deck drains, roadway drainage, catch basins, inlets or outlets are permitted to drain onto railroad ROW. Any variance of this policy must have prior written approval of the railroad, and maintenance of drainage structures so approved will be the responsibility of the Contractor and/or GDOT. Drainage from bridge scuppers and deck drains must be conveyed through pipes to a location off of, and draining away from, railroad ROW. If it is not practicable to convey such drainage away from track drainage ditches, calculations demonstrating the ability of the ditch to carry the additional runoff shall be provided to the railroad for approval.

g. Approval of the drainage plan does not relieve the Contractor or GDOT of ultimate responsibility and liability for a satisfactory drainage design.

10. Erosion Control

a. Contractor's plans shall indicate the proposed methods of erosion control and shall specifically address means to prevent silt accumulation in railroad ditches and culverts and to prevent fouling the track ballast and sub-ballast. If the plans do not show erosion control, the contractor must submit a proposed method of erosion control and must have the method approved by the railroad prior to beginning any grading on the project site.

b. Existing track ditches shall be maintained at all times throughout the construction period. After the construction has been completed, all erosion control measures must be removed, all deposits of silt removed, and the ditches restored.

c. Approval of the erosion control plan does not relieve Contractor and/or GDOT of ultimate responsibility and liability for a satisfactory erosion control plan.

11. Utilities

a. Contractor's plans shall show dimensioned locations of all existing and proposed utilities within the railroad ROW. Plans shall define the responsibility for locating, marking, or installing and protecting such utilities. Railroad shall not be responsible for these activities.

b. Pressurized and non-pressurized liquid carrier pipe lines suspended from overhead bridges that cross or run adjacent to railroad ROW shall be encased so as to protect railroad ROW and facilities from free falling discharge in the event of a carrier rupture.

c. If fiber optic cables are presently buried on the railroad ROW or if such installations are scheduled during the course of the project, then the presence of such facilities shall be considered in the design and appropriate measures for protection of the fiber optic cables shall be addressed on the plans and in the contract documents.

12. Miscellaneous

a. Contractor shall furnish "as built" drawings to railroad showing actual clearances and depth, size, and location of all foundation components.

b. Cast-in-place girders or pier caps will not be permitted in bridge spans crossing over operated track or in spans of bridges adjacent to and within 13'-0" of centerline of operated track.

c. Pedestrian fencing shall be provided for all structures designed to carry pedestrian or bicycle traffic. Consideration shall be given to providing pedestrian fencing on other structures where special circumstances, such as past history of vandalism, warrant such fencing.

d. Contractor shall coordinate design and construction of any elements of the work as appropriate with the railroad, including any false work, temporary shoring, temporary crossings or structures, shooflies, etc.

13. Project Work Affecting Railroad Operations

Contractor shall coordinate work performed under this section with the railroad as appropriate.

14. Railroad Agreements

Contractor shall be responsible for all costs for ascertaining and obtaining all required approvals, permits, and agreements for performance of the work, including any railroad related work. Contractor is responsible for all costs of the railroad work, whether incurred by Contractor or by the railroad, including costs of acquiring railroad property interests and costs with respect to relinquishment or acquisition of existing railroad property Interests.

a. Contractor to enter into a Preliminary Engineering Agreement with Central of Georgia Railroad Company/Norfolk Southern Corporation using the provided template.

b. A Construction Agreement will be conducted between GDOT and Central of Georgia Railroad Company/Norfolk Southern Corporation using the provided template.

15. Permanent ROW Encroachment Agreement(s)

Contractor shall prepare all documentation required to establish permanent ROW encroachment agreements between the railroad and GDOT. Where such efforts involve revisions to existing agreements, GDOT agrees to furnish copies of those agreements to Contractor for the latter's use in preparing revisions.

16. Railroad Right of Entry Agreement(s)

a. Prior to entering or encroaching upon railroad R/W to perform the work, Contractor shall secure a Right of Entry Agreement from the railroad and shall coordinate directly with the railroad the arrangements of said agreement which may include an outline of specific and general conditions with which Contractor must comply. For purposes of securing this agreement, Contractor shall furnish to railroad a schedule for all work impacting railroad R/W.

b. The railroad's Right of Entry Agreement shall include the names, addresses, and telephone numbers of the railroad's representatives for notification purposes. Where more than one representative is designated, area of responsibility of each representative shall be specified.

c. Contractor shall furnish copy of the fully executed Right of Entry Agreement to GDOT as proof of compliance with this provision. Contractor's shall not enter or impact railroad R/W prior to furnishing this proof of compliance to GDOT.

17. Operation Safety

a. Contractor shall so arrange and conduct its work that there will be no interference with railroad operations, including train, signal, and communication services, or

damage to the facilities or property of the railroad or tenants on the R/W of the railroad.

b. Whenever work is liable to affect such operations, safety, facilities, or property, the method of doing such work shall first be submitted to the railroad for review and approval, but such approval shall not relieve the Contractor from liability. Any work to be performed by the Contractor which requires flagging and inspection by the railroad shall be deferred by the Contractor until the flagging and inspection required by the railroad is available at the job site. Whenever work within railroad R/W is of such a nature that impediment to railroad operations is unavoidable, e.g. work requiring use of runaround or detour tracks or speed reductions (i.e. “slow orders”) on existing tracks, the Contractor shall schedule and conduct its operations so that such impediment is reduced to the absolute minimum.

c. Should conditions arising from, or in connection with the work, require that immediate and unusual provisions be made to protect operations, facilities, and property of the railroad, the Contractor shall make such provisions. If in the judgment of the railroad, or GDOT if the railroad is unavailable for such judgment, such provision is insufficient, either may require or make such provisions as deemed necessary. In any event, such unusual provisions shall be at the Contractor’s expense and without cost to the railroad or GDOT. Contractor shall comply with the railroad’s requirements for contractor safety training and criminal background checks prior to entering railroad ROW

18. Insurance Requirements

a. Prior to executing any work impacting existing railroad ROW, Contractor shall procure insurance policies naming GDOT, and railroad as insured parties. Such policies shall be maintained throughout the duration of work performed under this section.

b. Contractor shall obtain insurance in sufficient amounts to cover requirements set forth by all named insured parties. The following types of insurance are typically required, though the specific requirements of the named insured parties shall be covered:

1) Worker’s Compensation Insurance

2) Employer’s Liability Insurance

3) Commercial General Liability Insurance

4) Automobile Liability Insurance

5) Errors & Omissions and/or Professional Liability Insurance.

c. All insurance policies shall be in a form acceptable to the railroad. Copies of all insurance policies accompanied by written approval from railroad of such policies shall be submitted to GDOT prior to any entry by Contractor upon railroad ROW.

19. Construction Requirements

Refer to Special Provision for Protection of Railway Interests Section 5.A.

20. Track Clearances

The minimum track clearances to be maintained by the Contractor during construction are included in the Special Provision Section 999.3.E-5 through E-7. Clearances less than these will not be permitted unless specifically authorized by the railroad.

21. Temporary Excavation

Refer to Special Provision for Protection of Railway Interests Section 5.B.

22. Excavation for Structures

a. Refer to Special Provision for Protection of Railway Interests 5.C.

b. Footings for all piers, columns, walls or other facilities shall be located and designed such that any temporary shoring required for support of adjacent track(s) during construction will be no closer than 10’-0” to centerline of track(s). Edges of footings located no closer than 13’-0” to centerline of track(s) shall satisfy the 10’-0” minimum. Excavations shall be no closer than 10’-0” to centerline of track(s) unless specifically approved by the railroad.

c. Contractor shall submit excavation plans and calculations that have been prepared and signed by a Professional Engineer registered in the State of Georgia. Contractor shall be responsible for the accuracy of all controlling dimensions as well as the selection of soil design values which will accurately reflect the actual field conditions. Contractor’s plans shall contain details of the shoring system showing sizes of all structural members, connection details, and embedment depths. A plan view showing layout of all proposed excavations and distances from centerline of track(s) to faces of excavations shall be included. Plans shall show a section normal to the track(s) showing the shoring location relative to the centerline of track(s) and showing the height of shoring and track elevation(s) in relation to the bottom of excavation. The plans must be complete and accurately describe the nature of the work.

d. Excavation plans and calculations shall address all false work, shoring, excavation supports, etc., adjacent to railroad track(s) and shall be certified to be complete and satisfactory by GDOT prior to being submitted to the railroad for review. Four (4) copies of sealed plans and calculations shall be submitted. A minimum of 30 days shall be allowed for the railroad’s review of such submittals. No excavation will be allowed until the plans and calculations are reviewed and approved by the railroad. All excavations on or adjacent to the railroad ROW shall be reviewed by the railroad before excavation begins.

e. All shoring or other supports for excavations within the limits shown in Figure 1 (below) shall be designed for railroad live load surcharge.

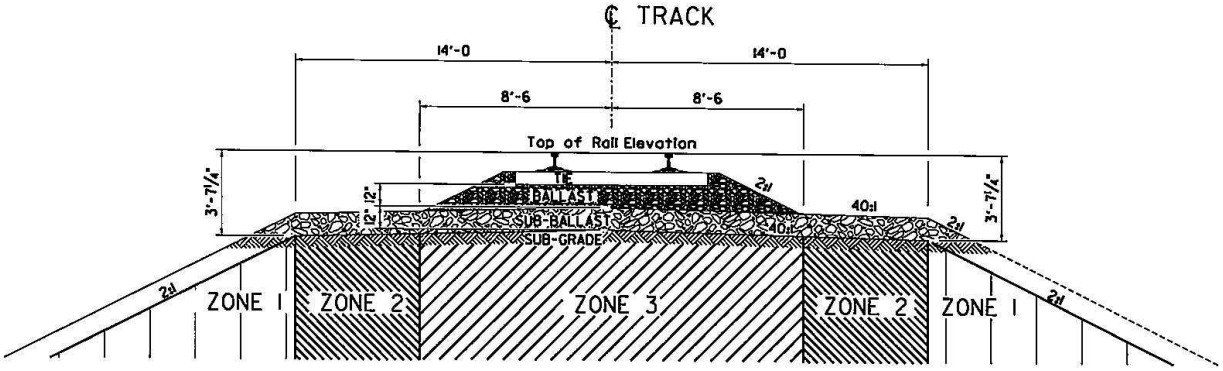

ZONE 1: Excavation penetrating any portion shall be supported with shoring for protection of the railroad embankment.

ZONE 2: Excavation penetrating any portion shall be supported with shoring consisting of interlocking steel sheeting for protection of the railroad embankment.

ZONE 3: EXCAVATION NOT ALLOWED IN THIS ZONE.

Figure 1 – Railroad Embankment Shoring Requirements

f. Shoring located in Zone 2 shall be designed using interlocking sheeting as shown in Figure 1. Use of soldier piles and lagging in this region will be considered only if the required penetration of interlocking steel sheeting cannot be obtained and when dry, stable material will be encountered. Approval for soldier piles and lagging must be granted in writing by the railroad prior to construction. Submittal of excavation plans showing soldier piles and lagging in Zone 2 without prior written approval from the railroad will be rejected.

g. Safety railings shall be constructed around all excavations on railroad's property, and shall conform to applicable OSHA requirements. Layout and details of safety railings shall be submitted to the railroad for review and approval prior to construction. Walkways with safety railings shall be constructed over open excavations located within Zone 2 of Figure 1. Walkways shall have a minimum clear width of 2'-6" and shall be capable of supporting an applied gravity live load of 100 PSF in addition to their own weight. Safety railings shall have a 6 inch tall continuous kick plate at the base. Walkways shall be situated such that safety railings shall be no closer than 10'-0" horizontally from centerline of track.

h. Railroad's approval of Contractor's excavation plan does not relieve Contractor and/or GDOT of ultimate responsibility and liability for the excavation plan

23. Demolition, Erection, Hoisting

    Refer to Special Provision for Protection of Railway Interests Section 5.D.

24. Blasting

    Refer to Special Provision for Protection of Railway Interests Section 5.E.

25. Maintenance and Repair of Railroad Facilities

    Refer to Special Provision for Protection of Railway Interests Section 5.F.

26. Storage of Materials and Equipment

    Refer to Special Provision for Protection of Railway Interests Section 5.G.

27. Cleanup

    Refer to Special Provision for Protection of Railway Interests Section 5.H.

28. Damages

    Refer to Special Provision for Protection of Railway Interests Section 6.

29. Flagging Services

    Refer to Special Provision for Protection of Railway Interests Section 7.

30. Transporting Materials and Equipment Across Tracks

    a. Refer to Special Provision for Protection of Railway Interests Section 8.

    b. Any temporary grade crossings, work mats, or other means needed during construction by the Contractor for transporting materials of any nature or equipment across railroad tracks or property of railroad will be the responsibility of the Contractor to handle directly with the railroad, and make all necessary arrangements and obtain all required approvals. The Contractor shall execute a written agreement with the railroad to cover such matters and appropriate time should be allowed for the preparation and handling of such agreement. The Contractor shall bear all costs incidental to such matters including flagging services by railroad personnel. Safety guidelines are given in Special Provision Section 999.3.E.33.

31. Work for Benefit of Contractor

    Refer to Special Provision for Protection of Railway Interests Section 9.

32. Cooperation and Delays

    Refer to Special Provision for Protection of Railway Interests Section 10.

33. Safety Guidelines

    Refer to Special Provision for Protection of Railway Interests Section 11.

34. Insurance

    Refer to Special Provision for Protection of Railway Interests Section 12.

35. Failure to Comply

    Refer to Special Provision for Protection of Railway Interests Section 13.

F. RIGHT OF WAY (ROW)

1. General Requirements

   a. This section sets forth the activities assigned to the Contractor, including pre-acquisition and acquisition activities, and designates which activities GDOT will conduct. This section also sets forth the requirements applicable to the work assigned to Contractor related to the acquisition of ROW. Contractor shall provide all services necessary to acquire title to the ROW, in form and substance acceptable to GDOT, in the name of the Georgia Department of Transportation; relocation of displacees; and clearance/demolition of the improvements from the ROW, as more fully described in the following sub-sections.

   b. The Contractor's ROW staff and/or Contractor will function as independent contractors while acquiring the ROW.

2. Administrative Requirements

   Standards

   a. ROW shall be acquired in accordance with State Laws and in conformance to GDOT policies, procedures, and guidelines.

   b. Pursuant to the applicable State regulations, the Contractor shall:

      1) Acquire ROW parcels for the Project on behalf of GDOT subject to GDOT's rights of review, approval, and audit

      2) Maintain adequate access to all properties at all times, or until relocation is completed

      3) Maintain Utility service to occupied properties at all times, or until relocation is completed

   c. Contractor shall maintain a complete and current set of approved ROW plans for public use.

   d. GDOT will either provide the Contractor any GDOT forms referenced in this section or will provide access to the Contractor to obtain any forms.

   e. All ROW activities shall be completed and documented in compliance with all applicable State Laws; and policies and procedures of GDOT.

3. ROW Acquisition Plan

   a. Contractor shall prepare a ROW Acquisition Plan. The ROW Acquisition Plan shall set forth Contractor's organization including names, titles and qualifications of Key Personnel and other ROW personnel, integration of the ROW schedule into the project schedule, interface between design and ROW activities, documentation and reporting, quality control procedures and quality review standards.

   b. The ROW Acquisition Plan shall contain, as a minimum, the following:

      1) The name and qualifications of the proposed ROW PM
      2) The resumes and qualifications for prequalified appraisers, relocation negotiation agents, relocation benefits specialist, pre-acquisition agent, conceptual stage study preparer, condemnation coordinator, property manager, negotiators, and any ROW personnel whose services will be required.

   c. The ROW Acquisition Plan shall establish the specific means by which Contractor will:

      1) Provide sufficient prequalified personnel (including an organizational chart) to achieve, in accordance with the project schedule, the goals and milestones

established for ROW acquisition, relocation assistance, appraisals, and clearance/demolition of the improvements from the ROW.

2) Provide relocation advisory assistance such as finding replacement properties, and offering special assistance, included ADA requirements.
3) Provide administrative support.
4) Provide a Conceptual Stage Study
5) Provide for foreign language, visually impaired, or hearing impaired translation, as necessary.
6) Provide documentation and reports.
7) Procure, distribute and explain GDOT acquisition and relocation brochures as approved by GDOT.
8) Establish, implement, and maintain quality control procedures and quality review standards for the acquisition for ROW.
9) Prevent fraud, waste, and mismanagement.

d. Contractor shall update the ROW Acquisition Plan including the organization chart regularly, at least quarterly or whenever changes in the Plan occur.

4. Schedule and Review Procedures

a. The Project Schedule shall indicate the date to begin the acquisition of the ROW and the anticipated completion date of acquisition activities for each parcel. GDOT shall be advised of all additional properties and temporary rights or interests in real property to be acquired by Contractor. In developing the project schedule, Contractor will give priority to the acquisition of parcels that have significant impact on the project schedule and/or affect the Critical Path as so indicated (i.e. relocation parcels, parcels with improvements, and property management).

b. The Contractor shall provide monthly ROW parcel status updates to GDOT.

c. In developing the project schedule, Contractor shall incorporate adequate time periods for GDOT reviews to include:

1) ROW plans approval (45 Days)
2) Assignment of review appraiser (10 Days)
3) Conceptual Stage Study review (30 Days)
4) Appraisal review (30 Days)
5) Relocation benefits package check review (30 Days)
6) Negotiation settlement amount approval (15 Days)
7) Administrative Appeals Hearings (45 Days)
8) Review of Condemnation Petition (30 Days)

d. GDOT will not begin review until the submittal package is complete. If any submittal is determined by GDOT to be incomplete or to be revised, the submittal will be returned and the timeframe given above shall start over for each re-submittal.

e. Schedule delays resulting from inadequate or incomplete appraisals, specialty reports, ROW Plans, negotiation packages, relocation packages, and condemnation petitions, shall be the responsibility of Contractor.

5. Contractor's ROW Scope of Services

a. Contractor shall complete all administrative activities and prepare all documentation sufficient for Contractor to acquire the ROW.

b. Upon Contractor request to GDOT, GDOT will request that the Office of Attorney General assign an approved Special Assistant to the Attorney General (SAAG) to conduct the title work, closings, condemnations, and any related legal activities.

c. Contractor shall not, without prior approval, initiate negotiations of the ROW until the ROW plans for the applicable constructible segment have been approved by GDOT.

d. Contractor shall not exceed 10% in condemnations of the total parcels required for the Project, without approval of GDOT.

e. If Contractor and the landowner cannot negotiate an agreed-upon purchase price, acceptable to GDOT, then GDOT will enter into an administrative appeal process with the property owner. Only after a reasonable settlement with a property owner cannot be reached through administrative appeal then acquisition of the property through eminent domain may commence. Contractor shall not be permitted to commence any condemnation action through the statutory "Declaration of Taking" on behalf of GDOT.

f. Contractor shall not begin construction on any parcel of real estate unless property rights for the parcel have been obtained and recorded in favor of GDOT and possession has occurred. ROW possession may be by use of Right of Entry (ROE) as may be granted by governmental agencies, and/or public utility owned companies, and as approved only by GDOT on a case by case basis.

6. Acquisition Process Summary

a. Contractor's major activities and services to be provided with respect to the acquisition of the ROW shall include, but are not limited to the following:

1) ROW plans development
2) ROW budget estimates and updates
3) Title related activities
4) Appraisals
5) Relocation benefits package preparations
6) Negotiations
7) Relocation advisory assistance
8) Condemnation petition preparations
9) Demolition of obstructions and clearance within required ROW
10) Documentation and document control
11) Monthly progress reports
12) ROW administration and management
13) ROW quality management
14) Obtaining all ROE's, as necessary

7. ROW Personnel Qualifications

a. The Contractor Right-of-Way Project Manager (ROW PM) shall be prequalified and approved by GDOT as Right-of-Way Project Manager.

b. The Contractor's appraisers shall be certified in the State of Georgia, be prequalified and approved by GDOT as an Appraiser, at the appropriate GDOT level for work being performed.

c. The Contractor's relocation negotiation agent shall be prequalified and approved by GDOT as a Relocation Negotiations Agent.

d. The Contractor's relocation benefits specialist shall be prequalified and approved by GDOT as a Relocation Benefit Package Preparer.

e. The Contractor's ROW negotiator shall be licensed either as a real estate sales person or broker pursuant to the Georgia Law and rules established by the Georgia

Real Estate Commission, shall be familiar with appraisal and appraisal report review pursuant to the USPAP and Uniform Relocation Act, and shall be prequalified and approved by GDOT as a Negotiation through Closing Agent.

f. The Contractor's condemnation court coordinator shall be prequalified and approved by GDOT as a Court Coordinator.

g. The Contractor's conceptual stage study preparer shall be prequalified and approved by GDOT as a Conceptual Stage Study Preparer.

h. The Contractor's property disposal and removal team shall include members who are prequalified and approved by GDOT in the following areas: Asbestos Inspector, Asbestos Abatement, Demolition, and UST Removal. The ROW PM shall be responsible for ensuring that the required ROW is free of obstructions prior to construction commencing on any segment of the project.

8. Contractor Conflict of Interest

If at any time, Contractor or to the best of Contractor's knowledge directly or indirectly

a. acquires or has previously acquired any interest in real property likely to be parcels of the ROW or the remainders of any such parcels;

b. loans or has previously loaned money to any interest holder in any real property likely to be a ROW parcel and accepts as security for such loan the parcel, or the remainder of any such parcel that is not a whole acquisition, or

c. purchases or has previously purchased from an existing mortgagee the mortgage instrument that secures an existing loan against real property likely to be a ROW parcel, or the remainder of any such parcel

d. is employed by or acts as a representative of any property owner or tenant which right of way or easement necessary for the project will be negotiated

Contractor shall promptly disclose the same to GDOT. In the case of acquisitions, loans or mortgage purchases that occurred prior project letting, such disclosure shall be made within fourteen (14) Days after project letting.

In the event that the Contractor, or any subsidiary or parent company of the Contractor, acquires a real property interest, whether title or mortgage, in parcels of the ROW Properties, the real property interest acquired or a release of mortgage as the case may be, shall be conveyed to the State of Georgia by condemnation.

In the event that the Contractor, or any subsidiary or parent company of the Contractor, is employed by or acts as a representative of any property owner or tenant which right of way or easement necessary for the project will be negotiated, the Contractor must immediately cease that relationship or activity.

9. Meetings

Contractor shall conduct and attend meetings as requested by GDOT. Meetings may include, but are not limited to property owner meetings and property acquisition status meetings. At such meetings Contractor shall provide exhibits, take minutes, and distribute minutes, as requested by GDOT, within five (5) Calendar Days of the meeting. Minutes will not be finalized until an adequate comment period of 5 days has been allowed.

10. Documentation and Reporting

a. Contractor shall provide GDOT with all specific reports and supporting documentation for review and approval during the acquisition process.

1) All correspondence with GDOT relating to acquisition of real property shall include a heading with the following information (at a minimum):

   (a) County
   (b) Project number(s)
   (c) PI number(s)
   (d) Parcel number
   (e) Name and address of record owner(s), tenant, or other interest holder

2) All correspondence with property owners relating to acquisition of real property shall be on GDOT Letterhead and include the following information (at a minimum):

   (a) County
   (b) Project number(s)
   (c) PI number(s)
   (d) Parcel number
   (e) Name and address of record owner(s), tenant, or other interest holder

b. In administering and managing its ROW activities, Contractor shall:

1) Maintain parcel records on file of all aspects of the acquisition process in accordance with GDOT requirements and applicable State Laws. Each negotiation parcel file shall include all documents required by GDOT.
2) Provide monthly summaries (or as requested) for the cost of ROW acquisition and related relocation assistance including amounts authorized and amounts paid on a parcel-by-parcel basis and budget forecasting on an overall project basis.
3) Maintain and electronically transmit to GDOT, in a format acceptable to GDOT, monthly status reports (or as requested) including appraisal, acquisition and relocation status of all parcels and activities related to ROW, including pre-acquisition, acquisition, relocation, and demolition/removal of improvement status.
4) Prepare and submit electronically to GDOT, on a monthly basis (or as requested), a spreadsheet that contains ROW specific data.

11. Responsibilities of Contractor

a. Contractor shall be responsible for the costs of all services and preparation of all documentation for all ROW acquisition, easement acquisition, permitting, related relocation assistance for the project and property demolition and removal. The Work related to ROW acquisition includes ROW plan development, surveying, environmental assessment, testing and remediation, appraisal, conceptual stage study, negotiation, acquisition, condemnation petition preparations. The Contractor shall also be responsible for relocation advisory assistance, and clearance/demolition of obstructions within required ROW.

b. The Contractor entering into negotiations with a property owner to use their property outside of the ROW acquisition limits for mobile work trailers, storage, equipment, etc. will be strictly between the Contractor and the property owner and is to in no way to affect the negotiations of any parcel acquisition required for the project. GDOT shall not be obligated to exercise its power of eminent domain in connection with Contractor's acquisition of any such temporary right or interest, and GDOT shall have no obligations or responsibilities with respect to the acquisition, maintenance or disposition of such temporary rights or interests.

12. Responsibilities of GDOT

GDOT will have the following responsibilities in connection with acquisition of ROW:

a. Just and adequate compensation (i.e. negotiated settlements, condemnation jury awards).

b. Provide final approval, where final approval is warranted, for all negotiation settlements, and relocation assistance payments.
c. GDOT will provide a staff ROW oversight manager and appeals officer to serve as first point of contact for all ROW issues, and who will be responsible for approving all negotiated settlements.
d. Provide payment for SAAG services and necessary expert witnesses.

13. GDOT Project Monitor/Reviewer

In addition to GDOT's review and approval authority, the Contractor's ROW Project Manager will audit, review and pre-approve all negotiations, files, settlements, etc. The GDOT assigned Consultant Coordinator / Appeals Officer / District ROW Team Manager will be the only authorized persons allowed to sign the Option Agreements and any Counter Offer Settlements.

14. Responsibilities of the Office of the Attorney General

The parties hereto acknowledge the statutory requirements that the Attorney General of the State of Georgia has exclusive authority to represent and defend GDOT, through the appointed SAAG. In its role as attorney for GDOT, the SAAG has the responsibility to:

a. Represent GDOT in all condemnation and eviction proceedings
b. Coordination with GDOT on all legal matters concerning acquisition processes, including all negotiated legal settlements
c. Analyze recommended parcel values and/or appraisal issues
d. Provide additional legal advice and opinions as needed by GDOT
e. Jury trials including determination of expert witnesses and all appeals
f. Preparation, obtaining, and filing of all necessary legal documentation for eviction of property owners or tenants.
g. Prepare preliminary and final title opinions
h. Conduct all closing activities

15. Pre-Acquisition Activities

Contractor shall adhere to the *GDOT ROW Manual* for pre-acquisition activities.

a. ROW Plans and Engineering

1) Contractor shall adhere to the *Plan Presentation Guide*, the *GDOT ROW Manual* and any current GDOT ROW plans checklist for the development of the ROW plans.

2) Upon approval from GDOT, the ROW plans may be prepared in separate constructible segments.

3) Contractor shall stake and flag all required ROW to include all temporary and permanent easements in accordance with the *GDOT Automated Survey Manual* and prior to beginning negotiations with property owner(s), and restake such areas as requested by property owner or GDOT.

b. Title Services

Contractor shall provide to the assigned SAAG one full size and one half size set of the preliminary ROW plans in order for the SAAG to procure preliminary title reports and owner verifications prior to negotiations. Contractor shall adhere to the *GDOT ROW Manual*, and shall also comply with the following requirements:

1) Review the preliminary title commitment or report to ensure that all current owners of record title are contacted and that negotiations or condemnation actions are conducted with all appropriate parties.

2) Work with the current owners of record to each parcel or interest in a parcel or their designee and all other appropriate parties to clear any title exceptions or exclusions not acceptable to GDOT.

c. Introduction to Property Owners

Contractor shall prepare and send out initial contact letters of introduction for both property owners and displacees. The letters shall clearly describe the Project, GDOT's need for the owner's property, and shall include the name and telephone number of a Contractor's representative. The forms for these letters shall be approved by GDOT prior to being distributed. Property owners or displacees unable to read or understand the notice shall be given appropriate translation.

16. Appraisals

a. Appraisal Services

Contractor shall provide GDOT with fair market value appraisals. All appraisals shall be prepared in conformance with acceptable appraisal methods/standards (including the Uniform Relocation Act), and in accordance with professional appraisal methods and applicable GDOT policies and procedures. In addition, Contractor's shall adhere to the *GDOT ROW Manual*, and shall also comply with the following requirements:

1) Select appraisers from GDOT's prequalified list of appraisers as per the appropriate level as determined by the GDOT review appraiser. GDOT shall have final approval of the selection of each appraiser submitted by Contractor. Contractor shall identify and receive written approval of the appraiser who will be responsible for the appraisal work product and who will be signing the reports.
2) Select certain specialty evaluation and cost estimators as may be required by the assigned review appraiser.
3) Establish personal pre-appraisal contact with each owner of record title and each occupant, and document all contacts.
4) Contact the record title owners or their designated representatives, by telephone, to offer them the opportunity to accompany the appraiser on the appraiser's inspection of the parcel, and maintain a record of all such contacts in the parcel file.
5) Obtain and include in the appraisal copies of all written leases, licenses and other occupancy agreements, including outdoor advertising/sign agreements, in order to identify lessees, licensee and other occupants with potential compensable interests in each parcel and to determine the value of each such interest.
6) Coordinate with the GDOT review appraiser regarding corrections and/or additional information that may be required for a particular appraisal.
7) Cause a report to be prepared by an environmental professional that meets ASTM E-1527-05, Standard Practice for Environmental Site Assessments: Phase 1 Environmental Site Assessment Process, documenting the environmental condition of each parcel, which may be based on field investigations and/or historical review, as appropriate for the particular parcel. The report shall be completed in coordination with the appraiser(s) and shall be available to the appraiser(s). A Phase I environmental site assessment shall be performed for all properties. If it is determined that there is a potential environmental risk based on the Phase I report then a Phase II investigation shall be performed. Prepare timely written notification to GDOT of any environmental or other concerns associated with the ROW or Additional Properties to be acquired that could require environmental remediation or other special attention or which would cause a report to be prepared.

8) Cause the appraiser(s) to prepare updated appraisals when required by GDOT or as needed during eminent domain proceedings. An updated appraisal package shall comply with USPAP.
9) Prepare and deliver to GDOT upon request, a copy of all file documents, as formally requested in discovery motions or request for production.

b. ROW Negotiation Package

Negotiation Packages prepared by Contractor shall include, but are not limited to, the following items for each parcel in accordance with the requirements of this section:

1) All Negotiation Package forms, letters, and documents shall be in compliance with State Laws and templates shall be provided by GDOT.
2) Two sets of approved half size ROW Plan sheets, to scale, including legal description data tables and applicable construction plan sheets, to scale, for each parcel. (One for file and one for property owner)
3) Control of access shall be addressed in all legal descriptions. All descriptions shall be in recordable form and shall be prepared in a form and manner acceptable to GDOT in all respects.
4) A title report, current within 180 Days, including copies of all documents identified in the exceptions listed therein.
5) A copy of the approved released appraisal report and all supporting documentation.

17. Acquisition Activities

a. ROW Negotiations

1) Contractor shall conduct all negotiations in accordance with the requirements of applicable State Laws.

2) Contractor shall:

(a) Contact each property owner or owner's designated representative in person to present the offer, on a pre-approved letter, and all required documentation (title report not more than six (6) months old; appraisal not more than twelve (12) months old). Contractor shall also maintain negotiation follow-up contacts (a minimum of three (3) contacts).
(b) Distribute to all property owners and displacees affected by the Project, GDOT- approved informational brochures.
(c) Identify lessors, lessees, licensees, occupants, or other parties with potential compensable interests including outdoor advertising sign owners, and, if appropriate, after consultation with GDOT, negotiate with such parties for the acquisition of their compensable interests
(d) Verify the property owners, lessee, licensees, occupants, and other holders of compensable interests. Confer with and transmit to GDOT any settlement proposals from property owners, lessees, licensees, occupants, or other holders of any compensable interest, as applicable, including a detailed recommendation from Contractor. GDOT will determine whether to accept any settlement proposal. Delivery of any settlement proposal and Contractor's recommendation to GDOT shall occur within seven (7) Days of Contractor's receipt of the settlement proposal from the interest holder. GDOT shall provide a settlement decision to Contractor within fifteen (15) Days. Contractor shall then provide a response to the interest holder within ten (10) Days.
(e) Send an appeal hearing notification (10 day letter) to the interest holder for those negotiations that are unsuccessful. In the event the interest holder requests an appeal hearing, GDOT will facilitate the process. GDOT will then

provide the results of the appeal hearing to the Contractor and the interest holder.

(f) Provide timely (i.e., not more than five (5) Calendar Days after inquiry) response to the verbal or written inquiries of any property owner, lessee, licensee, occupant or other holder of a compensable interest, as applicable.

(g) Create and maintain a complete negotiation parcel file for each interest holder (separately from the relocation files), and in conformance with *GDOT ROW Manual*. All original ROW documents must be retained and properly secured in Contractor's Project office or as otherwise approved by GDOT, and shall be accessible by GDOT upon request.

(h) Submit complete (closed or condemned) negotiation parcel files to GDOT for review only after a thorough review is performed by the Contractor's ROW PM.

(i) Be open to all reasonable settlement proposals (that comply with the regulations as outlined in this section) from the interest holders, which are feasible and help expedite the ROW acquisition process. Contractor understands that GDOT encourages solutions which satisfy the interest holder and promote the success of the Project.

b. Relocation Assistance

1) Contractor shall coordinate and perform the administrative requirements necessary to relocate any occupants and or their personalty from ROW. All Work prepared by Contractor with respect to relocation assistance shall be performed in accordance with applicable State Laws, the Uniform Relocation Act, and in accordance with all provisions of this Agreement.

2) Contractor's major activities with respect to the relocation assistance of occupants from ROW shall include but not limited to:

(a) Prepare a Conceptual Stage Study.

(b) Prepare a Relocation Plan in accordance with the *GDOT ROW Manual*.

(c) Monitor all relocation assistance activities.

(d) Prevent fraud, waste and mismanagement.

(e) Assist with all requests and be responsible for carrying out decisions made by GDOT, the relocation review/appeal process and judicial reviews.

3) With respect to determining relocation assistance benefits and preparing relocation assistance benefits packages (offer package and any replacement housing reports), all packages shall be prepared in conformance with applicable State Laws and regulations, 49 CFR, Part 24 – the Uniform Relocation Act, and GDOT policies and procedures. Such Relocation Specialists shall be thoroughly familiar with the Uniform Relocation Act in regards to determining relocation assistance benefits. In addition, the GDOT approved format for relocation assistance benefits packages shall be used and demonstrated in all forms, letters, and package documentation. Measures shall be taken to protect the integrity of the relocation assistance benefits determination process, such as designating a separate qualified individual to administer the relocation assistance benefits (other than the individual determining the relocation assistance benefits). Relocation assistance benefits packages must be submitted to GDOT ROW for review and approval prior to Contractor proceeding with administering any relocation assistance activities.

4) Contractor shall provide relocation assistance strictly in accordance with the State Laws and the Uniform Relocation Act. With respect to administering relocation assistance benefits, Contractor shall:

(a) Provide written notice to all property owners, lessees, licensees, occupants, and potential relocated person(s) regarding eligible relocation assistance; provide them with a relocation assistance brochure that has been approved by GDOT; perform relocation interviews, complete and maintain interview forms and discuss general eligibility requirements, programs, and services with potential displacees; and maintain a thorough written record of all contacts.
(b) Provide in writing to GDOT any questions as to the eligibility of a potential relocated person(s).
(c) Contact and provide relocation assistance to those parties affected by the ROW acquisition.
(d) Locate information, evaluate and maintain files on comparable available housing, commercial, retail, and industrial sites.
(e) Calculate replacement supplement benefits.
(f) Compute and submit relocation benefits packages to GDOT for review and approval prior to Contractor's preceding with any relocation activities.
(g) Perform and complete a Decent, Safe and Sanitary (DSS) inspection for any replacement housing.
(h) Secure and process any required moving estimates and forms, to be approved by GDOT, for the relocation of personal property.
(i) Coordinate moves with displacees and/or moving companies in accordance with GDOT procedures and the Uniform Relocation Act.
(j) Attend all closings on replacement properties, and assure supplemental payments, if any, are properly distributed in a timely manner.
(k) Process and compute increased interest payments on the mortgage of owner-occupied dwellings, as required.
(l) Deliver to displacees a 90 Day notice of eligibility letter simultaneous with the delivery of the relocation benefits package. Deliver a 90 Day letter to displacees with the location of the comparable property used to compute the supplement.
(m) Deliver a 60 Day notice to vacate to displacees after obtaining title to the ROW.
(n) Notify GDOT immediately if a displacee has not moved after the 60 Day notice to vacate has expired. Prepare a written recommendation to facilitate the displacees' move.
(o) Be available for any appeals or hearings.
(p) Prepare relocation payment claim submissions for all displacees and all relocation assistance benefits.
(q) Verify DSS dwelling criteria on all replacement housing as selected by the displacees.
(r) Secure dwellings and structures no later than 14 Days after vacancy and protect the ROW following acquisition and relocation.
(s) Maintain a complete file, separate from acquisition files, on each displacee and make available for immediate inspection to GDOT.
(t) Be responsible for all relocation activities that may occur after title is secured by condemnation.
(u) Prepare all correspondence to the displacees or their representative(s) on GDOT's approved letterhead.
(v) Assist the SAAG with eviction proceedings. Serve notice of eviction proceedings to the occupant(s) of the property who have not complied with move dates. Coordinate the eviction process with the local authorities and accompany the Sheriff's Department when the local authorities are carrying out eviction.

c. Closing Services

GDOT assigned SAAG will conduct all closing services. For purposes of closing services, Contractor shall:

1) Assure relocation negotiation agent attends all relocation closings.
2) Assure the relocation negotiation agent properly coordinates all assistance payments with the SAAG and GDOT.
3) Provide transportation assistance to all interest holders needing transportation services to and/or from the closing.

d. Condemnation Support

Contractor, as directed by GDOT, shall support condemnation efforts undertaken by the GDOT assigned SAAG and further delineated as follows:

1) Notify GDOT and document the reason(s) for condemnation, including recommendations for properly obtaining title in consideration of all interest holders.
2) List all interest holders in the condemnation petition.
3) Coordinate with assigned SAAG on all applicable eminent domain/condemnation activities in accordance with the policies and procedures as described in the *GDOT ROW Manual* and as required per State Laws.
4) Request an updated title report from GDOT assigned SAAG issuing the original title commitment prior to condemnation.
5) Prepare and submit condemnation petitions to the Office of ROW for review by GDOT's Legal Division and make any revisions or corrections, as requested by GDOT.
6) Forward, upon GDOT approval, petitions to assigned SAAG for recording with the appropriate Clerk of Superior Court.
7) Procure and make available a condemnation court coordinator who shall assist the assigned SAAG in making arrangements for conferences with witnesses prior to trial, appearing at court hearings, perform any other duties necessary to complete all eminent domain proceedings throughout the conclusion of all cases.
8) Procure appraisals and specialty reports, as required for condemnation proceedings, and as acceptable to GDOT and the assigned SAAG.
9) Procure and make available any necessary expert witnesses as required by GDOT and assigned SAAG.
10) Arrange for the appearance of all expert witness(es) or fact witness(es) when requested by the assigned SAAG.
11) Provide GDOT with a parcel status, on a monthly basis, for all condemnation parcels.
12) Provide the assigned SAAG with proper monetary court deposits for FMV.

e. Clearance/Demolition of ROW

Prior to demolition of any buildings, improvements, and/or fixtures, Contractor shall provide to GDOT, photographs of the property and all improvements, and other necessary documentation as applicable per *GDOT ROW Manual*. Contractor shall also provide photos of personalty and any other items of dispute in and of a quality suitable for presentation as evidence in court. Following possession of any improved property ROW, Contractor shall:

1) Coordinate all property management activities with GDOT ROW property management section.
2) Comply with all required Government Approvals.
3) Secure and protect the buildings, improvements and fixtures on the ROW until they are disposed of or demolished. Contractor shall board-up, mow, and winterize as required by GDOT or applicable Law.

4) Coordinate with the owner and occupants to assure the clearance of personal property from the ROW, as applicable.
5) Provide for any insect and rodent control and initiate extermination as required to protect the adjacent properties and rid the ROW from infestations.
6) Secure all appropriate Governmental Approvals required for demolition and environmental surveys or tests, and notify GDOT in writing of all such activities.
7) Prepare necessary documentation for disposal of improvements, fixtures and buildings in accordance with applicable Laws and submit the same to GDOT.
8) Properly disconnect all utility service(s) including, but not limited to, power, water, gas meter pulls, and sewer caps, at the back of the required ROW at a minimum, prior to any demolition or removal of any buildings, improvements and/or fixtures.
9) Process all required forms, documents and permit applications in order to proceed with the timely demolition or removal of any improvements, buildings and fixtures.
10) Properly notify GDOT ROW property management section upon completion of the demolition and clearance of all buildings, improvements and/or fixtures.

f. Property Fencing

1) Contractor shall comply with the specifications found in the latest version of GDOT's *Design Policy Manual,* and any Supplemental Specifications. Fencing standards for Contractor-provided fencing shall conform to referenced standards. All fencing installed by Contractor shall be preapproved by GDOT prior to installation.

18. Early ROW Acquisition

Early ROW acquisitions shall be considered by the Contractor. Contractor shall submit to GDOT a letter of recommendation for any advance "Hardship" purchase requests and/or any advance "Protective Buy". GDOT will review all advanced "Hardship" and/or "Protective Buy" purchase requests for authorization.

The Contractor shall update GDOT regularly, no less frequently than monthly, on the status of any advanced acquisition purchases, and the Contractor's ROW AM shall track all acquisitions through GDOT's ROW tracking system.

999.4 CONSTRUCTION

Ensure the Project is constructed as per the Project scope and as per the accepted Released for Construction plans in accordance with the Specifications. No construction will begin on any phase of the work prior to the Department providing written authorization to the Contractor to begin land disturbing activities. Deliver two (2) full size and four (4) half size sets of the Released for Construction plans to the Department's Area Office at least 1 (one) week prior to the Contractor performing initial land disturbing activities. Deliver all subsequent Released for Construction plans at least 24 (twenty four) hours before commencing land disturbing activities. All plans submitted to the Area Office for use on construction shall include all applicable Standards and Details required in the Work.

Construction includes, but is not limited to, the following:

A. All clearing and grubbing and grading required in accordance with Sections 201, 202, 205, 206, 208 and 209.All necessary grading and drainage (All proposed pipes shall be concrete) to construct the subgrades, including the removal and replacement of unsuitable material, shoulders and incidental work to include furnishing borrow pits, waste disposal areas and hauling borrow and waste materials as required. Ensure the removal and replacement of unsuitable material.

B. All necessary culvert extensions include removal and replacement of headwalls, aprons and rip-rap. Ensure existing culverts are analyzed for structural sufficiency for new fills. Where the existing culvert is not structurally sufficient, remove the deficient portion of the culvert and replace utilizing appropriate excavation and shoring as needed. Alternate methods of construction, including lightweight fill as defined in section 999.1.C, may be submitted to the Department for approval.

C. All necessary base construction, milling, leveling, asphalt paving and concrete paving to construct the pavement structure.

D. Removal of all curbs, drainage structures, pavements, bases and sub-bases, or other obstructions within the rights of way as necessary to construct the roadway section.

E. All signing, interstate signage including sign structures, signalization, pavement marking, raised pavement markers, and guardrail.

F. Ensure storing of any equipment and materials on the Project outside of the active clear zone.

G. Errors and omissions are the responsibility of the Contractor to correct and at the expense of the Contractor.

H. No existing materials removed from the Project shall be reused. Coordinate the removal and disposal of all Signing and ATMS items with the Department. All remaining material shall be disposed of properly by the Contractor in accordance with all Local, State and Federal laws.

I. Preparation of As-Built Construction Plans.

999.5 MEASUREMENT AND PAYMENT

The Work required under this Specification will not be measured separately for payment unless otherwise specified. Payment for the items listed below, complete and accepted, will be made at the Lump Sum price bid. Payment shall be full compensation for furnishing all materials, labor, tools, equipment, superintendence, mailing charges, removal and replacement of unsuitable material and other incidentals. It shall also be made for performing all work specified, including but not limited to, designing, detailing, producing construction plans (preliminary and final, electronic and hard copy), meeting with the Department, processing the NOI and complete construction. For all asphaltic concrete, when materials or construction are not within the tolerances specified in Sections 400 and 402, deductions shall be made in accordance with the applicable requirements of Sections 106, 400 and 402. The deduction will be determined by the following formula:

Deduction (per ton) = (1 – Pay Factor) X Assumed Unit Price/Ton

(See Chart Below)

Material	**Assumed Unit Price/Ton**	**Assumed Unit Price/SY**
Asphaltic Concrete 12.5 mm Superpave	**$59.00**	**N/A**
Asphaltic Concrete 12.5 mm Superpave with Polymer	**$64.00**	**N/A**
Asphaltic Concrete 19 mm Superpave	**$57.00**	**N/A**
Asphaltic Concrete 25 mm Superpave	**$56.00**	**N/A**
Plain PC Conc Pvmt, CL 3 , 12 inch thickness	**N/A**	**$67.00**

Provide a detailed estimate with the Release for Construction plans. Partial payments of the Lump Sum price will be made on monthly statements based on an accepted schedule of values and detailed estimate. Develop a schedule of values with sufficient breakdown for each of the following items:

- DESIGN COMPLETE
- CONSTRUCTION COMPLETE

Include the schedule for values a rational basis for partial payments of the Lump Sum bid based on the completed portion of the item and definitive activities. Submit the schedule for values to the Engineer. No payments will be made until the schedule of values is accepted.

No payment for mobilization will be made until the Department issues written authorization that plans are released for construction. Payment for mobilization shall not exceed 2.5% of the overall bid price for Construction Complete. The Contractor shall submit a detailed breakdown of mobilization in the proposed schedule of values for acceptance.

Contractor shall work with the Engineer to establish estimated earthwork, asphalt, and concrete quantities, as this will determine the frequency of required testing by the Department.

At the end of each calendar month, provide the Department with a certification showing the percent complete for each item of work. Include a breakdown and supporting documentation, to include the Design Consultant's monthly invoice, in sufficient detail to substantiate the percent complete certified.

Payment shall be made under:

Item 999-2010 - DESIGN COMPLETE …… per Lump Sum

Item 999-2015 - CONSTRUCTION COMPLETE ……. per Lump Sum

999.6 TECHNICAL PROPOSAL

Submit a Technical Proposal that includes, but is not limited to, a detailed critical path method project schedule (including all submittals shown in Table 4-1 of Special Provision 999, estimated review periods, and any other areas of Special Provision 999 where submittals are mentioned), schedule narrative describing the critical schedule components and how the Contractor will successfully manage each, any permit requirements, expected Released for Construction date, total contract time, mobilization assumptions, as well as, construction staging assumptions. Clearly document all assumptions in this technical proposal. There are no page limit restrictions for the technical proposal.

GDOT maintains the ability to review and approve the Preliminary Baseline Schedule after award. Selection of a Proposer will not imply acceptance or approval of Proposer's Preliminary Baseline Schedule.

Submit to the Department seven (7) copies of the technical proposal and one (1) cd or dvd containing an electronic copy of the technical proposal in a sealed envelope so marked as to identify its contents without being opened.

If the "Technical Proposal" is not received by the GADOT Office of Construction Bidding Administration, Room 1113, by no later than 11:00 a.m. on the day of the Bid Opening, the Bid will be subject to rejection.

A proposal will only be considered non-responsive if it does not contain the information noted in Special Provision 999.6, and any other information necessary to clearly demonstrate those assumptions used to form the basis of the bid. The technical proposal may be considered non-responsive if the bid or technical proposal contains any deviations from those items shown in the Scope (999.1.C) and applicable portions of the Costing Plans Package.

999.7 PAYMENT FOR WORK PRODUCT

A proposal must be considered responsive to be eligible to receive the Payment for Work Product as noted on Form A in Appendix A and also on the ftp site (see Special Provision Section 999.2.A) Additionally complete a W-9 Request for Taxpayer Identification Number and Certification. Non-responsive proposals will be ineligible to receive the Payment for Work Product and ineligible to be awarded the Project.

If a Proposer elects to be eligible for the Payment for Work Product, the Proposer must submit cd(s) or dvd(s) containing all design files, concepts, ideas, technology, techniques, methods, processes, drawings, reports, plans and specifications used in the development of the bid and technical proposal.

Submit the cd(s) or dvd(s), Form A in Appendix A, and the W-9 Request for Taxpayer Identification Number, as attachments to the Technical Proposal, to the GADOT Office of Construction Bidding Administration, Room 1113, by no later than 11:00 a.m. on the day of the Bid Opening.

Appendix A

FORM A

Contractual Services Certification

[To be executed by the Proposer]

The undersigned certifies on behalf of _____, that:
(Proposer name)

[check one of the following boxes]

☐ It has reviewed the policy set forth in this Contractual Services Certification and expressly recognizes and agrees to be bound by the provisions set forth herein.

☐ It has reviewed the policy set forth in this Contractual Services Certification and hereby waives any and all rights to any Payment for Work Product, as described herein.

CONTRACTUAL SERVICES CERTIFICATION

Each Proposer that submits a responsive, but unsuccessful, proposal shall be entitled to receive payment ("Payment for Work Product") from GDOT for work product that is not returned to Proposer, on the terms and conditions described herein. No Proposer shall be entitled to reimbursement for any of its costs in connection with the RFP except as specified in this Contractual Services Certification.

The maximum Payment for Work Product per Proposer for this procurement is $50,000.

All Proposers eligible to receive a Payment for Work Product must submit an acceptable invoice to GDOT in order to receive such payment. The invoice may be submitted no earlier than 45 days after notice of final award of the DB Contract is posted on the GDOT website, or, if final award is not made, not earlier than 30 days after cancellation of the procurement or expiration of the time period for award stated in the RFP (as such time period may be extended by mutual agreement of the selected apparent Low Bid Proposer and GDOT), as applicable.

Payments will be made within 30 days of receipt of an acceptable invoice.

Each Proposer agrees that GDOT shall be entitled to use all work product, including sharing such work product with the selected apparent Low Bid Proposer, that is not returned to Proposer (including concepts, ideas, technology, techniques, methods, processes, drawings, reports, plans and specifications) contained in its proposal or generated by or on behalf of Proposer for the purpose of developing its proposal, in consideration for GDOT's agreement to make payment as provided herein, without any further compensation or consideration to Proposer.

Each Proposer acknowledges that GDOT will have the right to inform the successful Proposer regarding the contents of the other proposals after award of the DB Contracts, and that the DB Contracts may incorporate the above-described work product or concepts based thereon. Upon Proposer's receipt of payment hereunder, this right shall extend to allow GDOT to use such work product. The use of any of the work product by GDOT at the sole risk and discretion of GDOT, and shall in no way be deemed to confer liability on the unsuccessful Proposer.

In no event shall any Proposer that is selected for award but fails to satisfy the award conditions set forth in **Special Provision Section 999.6 Technical Proposal** be entitled to receive a Payment for Work Product under this Contractual Services Certification.

Signature: _____Date:_____
By President or Vice President

_____
Printed Name

Title: _____

_____
Corporate Seal

September 22, 2011

AMENDMENT TO ADVERTISED CONTRACT

CONTRACT I.D. NUMBER: B34161-11-000-0

GEORGIA PROJECT NUMBER: CSMSL-0008-00(690)

PCN: 0008690.01000

COUNTY: CHATHAM

AMENDMENT NUMBER: 1

LETTING DATE: November 18, 2011

LETTING NUMBER: 001

THE FOLLOWING CHANGES ARE HEREBY MADE TO THIS CONTRACT. THE BIDDER IS RESPONSIBLE FOR MAKING ANY NECESSARY CHANGES IN INK IN THE PROPOSAL. BIDDER SHALL ACKNOWLEDGE THIS AMENDMENT BY CHECKING THE APPROPRIATE SPACE ON THE PROPOSAL SIGNATURE PAGE.
****

1. **Delete** Proposal Pages 22, 547, and 576 through 578 from the proposal **and Add** the attached revised/added pages 547 and 547A through 547E to the proposal.

2. Supplemental Specification Section 109-Measurement and Payment, Subsection 109.11; **Make** the following changes to the proposal:

   A. Subsection 109.11 A.; **Delete** the first paragraph.
   B. **Delete** Subsection 109.11 A.1.
   C. **Revise** Subsection 109.11 A.2 **to read** Subsection 109.11 A.1.
   D. **Revise** the formula specified in Subsection 109.11.A.1.a. **to read**:
      "PA= [((APM-APL)/APL)] X TMT X APL
   E. **Revise** the formula specified in Subsection 109.11.A.1.b. **to read**:
      "PA= [((APM-APL)/APL)] X TMT X APL
   F. **Delete** Subsection 109.11 B.
   G. **Revise** Subsection 109.11 C. **to read** Subsection 109.11 B.
   H. Subsection 109.11 B.; **Delete** the last 2 sentences of the paragraph.
   I. **Delete** Subsection 109.11 D.
   J. **Revise** Subsection 109.11 E. **to read** Subsection 109.11 C.
   K. Subsection 109.11 C.2.; **Change** the sentence **to read** as follows:
      "There is a cap of 60% above the APL for any price adjustment."
   L. Subsection 109.11 C.3.; **Delete** the wording "Fuel or" and "Fuel/", respectively.
   M. **Revise** Subsection 109.11 F. **to read** Subsection 109.11 D.
   N. Subsection 109.11 D.; **Make** the following changes:
      1. **Delete** the wording "fuel/" in the sentence.
      2. **Delete** the Price Adjustment for Unleaded Fuel and Diesel Fuel from the chart.

AMENDMENT TO ADVERTISED CONTRACT (continued):

3. **Add** the following Special Provisions to the proposal:

   A. Section 300-General Specifications for Base and Subbase Courses dated September 28, 2009, 2 pages
   B. Section 307-Impermeable Membrane for Subgrades, Basins, Ditches and Canals dated November 13, 2008, 1 page

4. Proposal Page 657, Special Provision Section 999-Design-Build Project; **Delete** Subsection 999.1.C.6 **and Substitute** the following:

   "Prepare a flood study for bridge(s) and bridge culvert(s) over tidally influenced waters and design the bridge(s) and bridge culvert(s) for a "no rise" condition, if applicable. Contractor shall obtain a community concurrence letter prior to construction of bridge(s), as per the GDOT Drainage Manual, if required."

5. Proposal Page 658, Special Provision Section 999-Design-Build Project; **Delete** Subsection 999.1.C.14 and 999.1.C.14 **and Substitute** the following:

   14. Re-construct a portion of SR 307/Bourne Avenue with two travel lanes in each direction and dual left turn lanes onto northbound Jimmy Deloach Connector.

       a. Ensure SR 307/Bourne Avenue re-construction extends to tie into a concrete pavement section on eastern and western project termini. Requires coordination with GDOT PI No. 0000345 and PI No. 562165.

       b. Construct a commercial driveway for the Cross Atlantic LLC and Joe C. Sikes properties in general conformance to the Costing Plans Package.

       c. The Value Engineering Recommendation Implementation Report recommends not implementing a T-Intersection at this location. If a T-Intersection is proposed, the Environmental Document will need to be updated and a reversal to the Value Engineering Recommendation Implementation Report will need to be proposed and approved. The right of way acquired must accommodate the split ramp design.

       d. Construct dual left turn lanes from Jimmy Deloach Connector onto eastbound SR 307/Bourne Avenue.

       e. Install signal(s) at the intersection of Jimmy Deloach Connector and SR 307/Bourne Avenue.

   15. Construct a grade separated, full diamond interchange at Jimmy Deloach Connector and Grange Road with right turn and acceleration lanes at each ramp head.

       a. Interchange must accommodate Grange Road widening project, PI 0007885.

   Construct Grange Road asymmetrically by maintaining the existing southern edge of pavement as the proposed edge of paved shoulder.

AMENDMENT TO ADVERTISED CONTRACT (continued):

6. Proposal Page 659, Special Provision Section 999-Design-Build Project; **Delete** Subsection 999.1.C.23 **and Substitute** the following:

23.Ensure the pavement design meets or exceeds the pavement design as follows:

Paving for Jimmy Deloach Connector, Ramps, Grange Rd, and SR 307/Bourne Avenue			
Travel Lanes		**Shoulders**	
Material	Spread Rate	Material	Spread Rate
Plain Portland Cement Concrete Pvmt, Class 1 Concrete, 12 Inch Thick	N/A	Plain Portland Cement Concrete Pvmt, Class 1 Concrete, 12 Inch Thick	N/A
19 mm Superpave, GP 1 OR 2, Incl Bitum Matl & H Lime	330 lb/sy	19 mm Superpave, GP 1 OR 2, Incl Bitum Matl & H Lime	330 lb/sy
Graded Aggregate Base Course – 12 Inch Depth Incl Matl	N/A	Graded Aggregate Base Course – 12 Inch Depth Incl Matl	N/A
Paving for Pierce Avenue			
Travel Lanes		**Shoulders**	
Material	Spread Rate	Material	Spread Rate
12.5 mm Superpave, GP 1 OR 2, Incl Polymer- Modified Bitum Matl & H Lime	165 lb/sy	12.5 mm Superpave, GP 1 OR 2, Incl Polymer- Modified Bitum Matl & H Lime	165 lb/sy
19 mm Superpave, GP 1 OR 2, Incl Bitum Matl & H Lime	220 lb/sy	19 mm Superpave, GP 1 OR 2, Incl Matl & H Lime	220 lb/sy
25 mm Superpave, GP 1 OR 2, Incl Bitum Matl & H Lime	660 lb/sy	25 mm Superpave, GP 1 OR 2, Incl Bitum Matl & H Lime	660 lb/sy
Graded Aggregate Base Course – 12 Inch Depth Incl Matl	N/A	Graded Aggregate Base Course – 12 Inch Depth Incl Matl	N/A

7. Proposal Page 660, Special Provision Section 999-Design-Build Project; **Delete** Subsection 999.1.C.24 and 999.1.C.25 **and Substitute** the following:

24.Place all driveways, where access is allowed, as directed by the Engineer in accordance with Rules and Regulations for Control and Protection of Department of Transportation Rights-of-Way. Pave all driveways to the Right-of-Way line, or tie-in point, whichever is greater. Repave all non-concrete driveways that are to be reconstructed with asphalt. Repave concrete driveways with concrete. The driveway locations indicated on the plans are from the best available data. Construct (unless otherwise noted on the plans) new driveways to match the actual field location of existing driveways where they are not in conflict with the Rules and Regulations. Obtain

AMENDMENT TO ADVERTISED CONTRACT (continued):

the approval of the Engineer prior to making any revisions such as to location, width and/or number of drives to be constructed. Driveways shall be paved as follows:

Residential Asphaltic Concrete Driveways	
Material	Spread Rate
12.5 mm Superpave, GP 1 OR 2, Incl Bitum Matl & H Lime	330 lb/sy
Graded Aggregate Base Course – 6 Inch Depth Incl Matl	N/A
Commercial Asphaltic Concrete Driveways	
Material	Spread Rate
9.5 mm Type II, Superpave, Blend 1, Incl Bitum Matl & H Lime	135 lb/sy
19 mm Superpave, GP 1 OR 2, Incl Bitum Matl & H Lime	220 lb/sy
25 mm Superpave, GP 1 OR 2, Incl Bitum Matl & H Lime	330 lb/sy
Graded Aggregate Base Course – 8 Inch Depth Incl Matl	N/A
Residential Concrete Driveways	
Material	Spread Rate
Portland Cement Concrete – 4”	N/A
GRADED AGGREGATE BASE – 6” DEPTH	N/A
Commercial Concrete Driveways	
Material	Spread Rate
Portland Cement Concrete – 8”	N/A
GRADED AGGREGATE BASE – 10” DEPTH	N/A

25. Contractor to extend 19 mm Superpave, GP 1 or 2, incl Bitum Matl and H Lime and Graded Aggregate Base Course sections two (2) feet outside of edge of travel way on Jimmy Deloach Connector, Ramps, Grange Rd, and SR 307/Bourne Avenue.

8. Proposal Page 662, Special Provision Section 999-Design-Build Project; **Delete** Subsection 999.1.C.36 from the proposal.

AMENDMENT TO ADVERTISED CONTRACT (continued):

9. Proposal Page 662, Special Provision Section 999-Design-Build Project; **Delete** Subsection 999.1.C.39 **and Substitute** the following:

    39. Construction not to encroach on the Southern Natural Pipeline property located approximately between STA 6005+90 and the bridge over SR 21 along the Jimmy Deloach Connector southbound alignment.

10. Proposal Page 662, Special Provision Section 999-Design-Build Project, Subsection 999.1.C the following; **Add** the following:

    44. One Design Variance has been approved for Access Control along Pierce Ave for the proposed access driveway.

    45. Downstream overbank flood protection shall be provided by controlling the post-development peak discharge rate to the pre-development rate for the 2-year through the 50-year, 24-hour return frequency storm event. Detention ponds are to be designed for a 48 hour detention time for all design storms. Extreme flood protection shall be provided by controlling and/or safely conveying the 100-year, 24-hour return frequency storm event such that there is no increase in flood elevations, either upstream or downstream. Install a concrete low flow channel in detention ponds.

        a. Design detention ponds in accordance with Federal Aviation Administration (FAA) requirements.
        b. Coordinate detention pond design with FAA:
           Dana Perkins
           404-305-7152
           Federal Aviation Administration
           Atlanta Airports District Office
           1701 Columbia Ave.
           Campus Bldg., Suite 2-260
           College Park, GA 30337-2747

    46. Fine grader is required. Refer to Special Provision 300.

    47. Construct all bridges to meet horizontal and vertical clearances as shown in the Costing Plans Package.

    48. Design the project in accordance with the Coastal Stormwater Supplement Manual, First Edition April 2009, if required.

    49. All lanes to be a minimum of 12’ wide, unless otherwise specified.

11. Proposal Page 662, Special Provision Section 999-Design-Build Project, Subsection 999.1.D; **Delete** the last paragraph **and Substitute** the following:

AMENDMENT TO ADVERTISED CONTRACT (continued):

"Any land or easement required to construct the project shall be in the name of Georgia Department of Transportation. Land or easements acquired outside those areas needed for actual construction of the project (e.g. construction office space, material storage, etc…) will be the responsibility of the Contractor. GDOT will not pay for land or easements outside the construction footprint of the project. Land or easements as needed for the relocation of Utilities with prior rights are considered within the construction footprint of the project."

12. Proposal Page 664, Special Provision Section 999-Design-Build Project; **Delete** Subsection 999.1.E.9 **and Substitute** the following:

    9. The Contractor shall prepare the Individual Permit (IP) application to the Department's satisfaction. The Department will transmit the IP to the USACE. The Contractor shall be responsible for satisfactorily addressing the USACE's comments. The Contractor is required to satisfactorily address the USACE's comments within 14 calendar days of receipt. If any additional impacts result from the Contractor's proposed design versus those in the most recent ecology addendum, then the Department will perform special studies which will require 120 additional days prior to the Department's submittal of permit documentation to the appropriate agency and will require the Department to complete a reevaluation. Once the Department receives an approved IP from the USACE, the Department will issue written notification to the Contractor that the Contractor shall then acquire all mitigation credits in the name of the Department as required under the approved permit. All costs of mitigation credits will be borne by the Contractor. All mitigation credits obtained by the Contractor and applied to the Project shall be approved by the USACE. Upon satisfactory receipt of the Contractor's credit purchase, the Department will provide written authorization to work in jurisdictional Waters of the US in accordance with the permit conditions. Allow the following minimum review times for USACE:

       a. Jurisdictional Determination – 45 days for the initial review and 30 days for subsequent reviews.

       b. Individual Permit – 120 days for the initial review and 30 days for subsequent reviews.

       c. Joint Public Notice – 30 day comment period for Resource Agencies and Public. Comment period is issued once USACE determines IP package is complete.

13. Proposal Page 665, Special Provision Section 999-Design-Build Project; Subsection 999.1.E.15.k; **Add** the following:

    "The NPDES permit will be obtained and the NOI will be submitted no later than July 1, 2013."

AMENDMENT TO ADVERTISED CONTRACT (continued):

14. Proposal Page 670; **Delete** the first page of Table 4-1 **and Substitute** the attached revised/added Table 4-1: Reviews, 2 pages.

15. Proposal Page 674, Special Provision Section 999-Design-Build Project; Subsection 999.3.A.5; **Delete** the wording "(CAiCE)" from the first sentence.

16. Proposal Page 677, Special Provision Section 999-Design-Build Project; Subsection 999.3.B.1.b; **Delete** the last sentence of the first paragraph **and Substitute** the following:

    "Plan and specifications shall conform to the requirements of the Highway Capacity Manual, 5th edition, 2010."

17. Proposal Page 677, Special Provision Section 999-Design-Build Project; Subsection 999.3.B.1.b; **Delete** the sentence "Several Design Exceptions have been approved for this Project." from the second paragraph.

18. Proposal Page 678, Special Provision Section 999-Design-Build Project; Subsection 999.3.B.1.c; **Add** the following after the second paragraph:

    "Design the ESPCP plans in accordance with the Revised ESPCP General Notes Template dated 8/24/2011."

19. Proposal Page 721, Special Provision Section 999-Design-Build Project; Subsection 999.5; **Delete** the chart from the page **and Substitute** the following revised chart:

Material	Assumed Unit Price/Ton	Assumed Unit Price/SY
Asphaltic Concrete 9.5 mm Superpave	**$78.76**	**N/A**
Asphaltic Concrete 12.5 mm Superpave	**$73.29**	**N/A**
Asphaltic Concrete 12.5 mm Superpave with Polymer	**$86.45**	**N/A**
Asphaltic Concrete 19 mm Superpave	**$66.39**	**N/A**
Asphaltic Concrete 25 mm Superpave	**$64.50**	**N/A**
Plain PC Conc Pvmt, CL 3 , 12 inch thickness	**N/A**	**$42.98**

20. Proposal Page 722, Special Provision Section 999-Design-Build Project; Subsection 999.6; **Delete** the last paragraph.

21. Proposal Page 723, Special Provision Section 999-Design-Build Project; Subsection 999.7; **Delete** the first paragraph and Substitute the following:

    "A proposal will contain all information as required in Special Provision Section 999.6 to be eligible to receive the Payment for Work Product as noted on Form A in Appendix A and also on the ftp site (see Special Provision Section 999.2.A). Additionally complete a W-9 Request for Taxpayer Identification Number and Certification. Proposals without all

AMENDMENT TO ADVERTISED CONTRACT (continued):

information as required in Special Provision Section 999.6 will be ineligible to receive the Payment for Work Product and ineligible to be awarded the Project."

DAVID E. HOGE
STATE TRANSPORTATION OFFICE ENGINEER

Level 3 Approved Vender list

Engineering:
Sourceone Corp
Byers Engineering Co Inc
Turnkey

Construction - Underground:
Shiflett Enterprises
Fountain
Fishel Company

Construction - Aerial:
Metropolitan Communications Group Inc.
Hypower Inc
Shiflett Enterprises

Splicing:
Hypower Inc
Edwards Telecommunications Inc.
Owens Telecom Services Inc.
Shiflett

REVISED/ADDED 547

Vendor Contact Information							
Approved Vendor	**Contact Name**	**Contact Email**	**Contact Phone Number**	**Address**	**City**	**State**	Zip
Byers Engineering Company	Dan Clark	Dan.clark@byers.com	404-497-1943	6285 Barfield Road	Atlanta	GA	30328
Edwards Telecommunications Inc.	Buddy Timmons	btimmons@edwardstelecom.com	803-750-2472	777 Old Clemson Road	Columbia	SC	29229
Fountain Engineering, LLC	Amy Fountain	Amyfountain@fountainengineering.net	786-586-9826	21050 South West 172 Ave	Miami	FL	33187
Hypower, Inc.	Daniel Disalvo	ddisalvo@hypowerinc.com	954-448-8067	5913 NW 31st Ave	Ft. Lauderdale	FL	33309
Metropolitan Communications Group, Inc	Chris Butler	chris.butler@mcgfiber.com	484-530-5111	910 Camaro Run Drive	West Chester	PA	19380
Owens Telecom Services, Inc.	Oliver M. Owens	owens204@lwol.com	615-289-6778	204 Revere Court	Smyrna	TN	37167
Shifflet Enterprises	Robert Shiflett	751 Corinth Road	770-502-1565	shifent@bellsouth.net	Newnan	GA	30263
Sourceone Corporation	Bee Jee McGinty	beejee@sourceonecorp.com	678-594-5100	800 Kennesaw Ave, Suite 320	Marietta	GA	30060
The Fishel Company	Gary R. Cooper	grcooper@teamfishel.com	770-782-7550	6523 Marbut Road	Lithonia	GA	30058
Turnkey Project Management, LLC	Frank Hamilton	frank.hamilton@turnkeypm.net	770-868-1074	34 W. Stephens St.	Winder	GA	30680

REVISED/ADDED 547A

Georgia DOT Project: CSMSL-008-00(690) Chatham
GDOT P.I. # 0008690

DESIGN-BUILD
MEMORANDUM OF UNDERSTANDING

between the
Georgia Department of Transportation (hereafter the DEPARTMENT)
and
Hargray Communications (hereafter the OWNER)

Whereas the DEPARTMENT proposes to undertake a design-build project hereafter referred to as PROJECT to extend the Jimmy Deloach Parkway in Chatham, Georgia by contract through competitive bidding procedures; and,

Whereas the DEPARTMENT will accomplish the PROJECT through a Design Consultant, Design Consultant Team and/or Contractor hereafter referred to as CONTRACTOR; and,

Whereas, where OWNER has property rights ("Prior Rights") at the location of the PROJECT, OWNER will provide written evidence as to said prior rights within the area and will provide written documentation of prior rights relating to any individual crossing or Utility Facility, at the location of the PROJECT; and

Whereas, OWNER acknowledges that, generally, absent a showing of prior rights, the costs of relocation, protection, removal, or adjustment performed by OWNER shall be borne by OWNER; and

Whereas, pursuant to O.C.G.A. § 32-6-170(b), DEPARTMENT is authorized to pay or participate in the payment of the costs of relocation, protection, or adjustment of OWNER'S facilities where DEPARTMENT has made the determination that (i) such payments are in the best interest of the public and necessary in order to expedite the staging of the design-build project; and (ii) the costs of the removal, relocation, protection, or adjustment of such facilities are included as part of the Contract between the Department and the Department's roadway contractor for the design-build project; and

1. Type of Utility

OWNER has the following utility facilities which may need to be adjusted or relocated as a result of the proposed PROJECT:

Type of facility or facilities of OWNER:
_____Domestic water mains and distribution lines and associated appurtenances
_____Sanitary Sewer facilities and/or Storm Drainage System
_____Electrical Distribution (overhead and underground) wires, poles, etc.
_____Electrical Transmission (overhead and underground) wires, poles, etc.
_____Natural Gas Distribution Facilities (underground)
_____Natural Gas Transmission Facilities (underground)
_____Petroleum Pipeline (underground)
___✓___Telecommunications facilities and equipment
_____Cable TV facilities
_____Street Lighting
_____Internet Data Service

REVISED/ADDED 547 B

2. New Utility Facilities Proposed (Betterment)

OWNER desires the following to be installed as new additional facilities within the PROJECT. Insert here or attach a detailed description of proposed new additional utility installations:

Not Applicable

3. Assignment of Responsibilities for Design and Construction

This MEMORANDUM OF UNDERSTANDING and the following shall serve as a *basis* for assignment of responsibilities and costs for the DEPARTMENT to enter into a Standard Utility Agreement (SUA) or Contract Item Agreement (CIA), if necessary, with OWNER once the PROJECT is awarded to the CONTRACTOR. For a PROJECT implementation, GDOT will not have in its possession exact costing plans to be utilized to determine exact locations of the removal, relocation, protection, or adjustment. However, Overhead/Subsurface Utility Engineering (SUE) investigations plans exist providing the best information and signifying the layout of known existing facilities. Please use these plans for developing the final determination of services as indicated below. The CONTRACTOR developed plans will be provided to the OWNER after the design build project is awarded by GDOT which shall be used by the CONTRACTOR as the final basis for the SUA or CIA.

OWNER hereby intends to:

A. OWNER, at the DEPARTMENT'S cost, will provide the following services for the properties for which it has established prior rights (check to signify):

Design _____
Construction _____

B. OWNER, for any removal, relocation, protection, or adjustment that do not have prior rights will allow their facilities to be placed into the DEPARTMENT'S contract for the following services pursuant to O.C.G.A. § 32-6-170(b). The DEPARTMENT will add the removal, relocation, protection, or adjustment cost to the overall PROJECT's cost. The OWNER will be responsible for all design work cost (check to signify):

Construction ✓

As per this section, all work necessary for the removal, relocation, protection, or adjustment of the described utilities in accordance with the plans when approved shall be included in the project contract and accomplished by the CONTRACTOR except as follows (check none or list any work items to be performed by the OWNER)

None ✓

Excluded Items _____

REVISED/ADDED 547 C

C. OWNER, at OWNER'S cost, will provide the following services (check to signify):

Design ✓
Construction _____

The following is hereby mutually agreed to and understood by both parties:

1. The identification of existing facilities including preparation of Overhead/Subsurface Utility Engineering (SUE) investigations plans will be accomplished by the DEPARTMENT prior to award of the PROJECT and thereafter supplemented by the CONTRACTOR.

2. The CONTRACTOR shall coordinate reviews of the utility relocation information and obtain acceptance from the OWNER and DEPARTMENT when required. However; the OWNER shall apply for and obtain any required permits from the DEPARTMENT and perform any final design or proprietary design needed to administer its own relocation work if the work will not be included in the PROJECT (list any work not included in the PROJECT in space provided above). If the preliminary plans indicate that no conflict exists, and the OWNER concurs with this information, the OWNER shall provide a letter of "no conflict" to the CONTRACTOR.

3. After award of the project, the CONTRACTOR will research the property interest of each OWNER and present the findings to the DEPARTMENT and OWNER for approval. The CONTRACTOR will coordinate resolution of any disputed items. The plans and estimate for the utility work shall be subject to approval of both the DEPARTMENT and the OWNER prior to construction. If the OWNER chooses to include the subject utility work in the PROJECT and the research indicates that no property interest exists, the OWNER did not indicate Section 3B above, and the OWNER cannot refute this finding with evidence that would substantiate the property interest in legal proceedings, the OWNER shall provide confirmation in writing that OWNER will reimburse the DEPARTMENT for any adjustment or relocations necessary; and an agreement will be prepared and executed in accordance with the DEPARTMENT'S "Utility Accommodation Policy and Standards Manual". If the OWNER chooses to perform its own relocations and the OWNER holds no property interest as stated above, the OWNER shall confirm in writing that the OWNER will relocate its own facilities at no cost to the DEPARTMENT and the CONTRACTOR.

4. All construction engineering and contract supervision shall be the responsibility of the DEPARTMENT and the CONTRACTOR to ensure that all utility work included in the PROJECT is accomplished in accordance with the PROJECT's plans and specifications. The CONTRACTOR will consult with the OWNER before authorizing any changes or deviations which affect the OWNER's facility.

5. For Utility work included in the PROJECT, the CONTRACTOR shall ensure that the construction and installation of the OWNER'S facilities is performed by a contractor prequalified/registered with both the DEPARTMENT and the OWNER. The CONTRACTOR shall contact the OWNER to obtain the current list of the OWNER's prequalified Contractors:

6. For Utility work included in the PROJECT's contract, the OWNER or the OWNER's Consultant shall have the right to visit and inspect the work at any time and advise the CONTRACTOR and the DEPARTMENT'S Engineer of any observed discrepancies or potential issues. The DEPARTMENT agrees to notify the OWNER when all utility work is completed and ready for final inspection by the OWNER.

7. Upon Maintenance Acceptance or Final Acceptance of the utility work included in the contract and upon certification by the DEPARTMENT'S Engineer and the OWNER, that the work has been completed in

REVISED/ADDED 547 D

facilities and will thereafter operate and maintain said facilities located within the PROJECT right of way subject to the DEPARTMENT'S "Utility Accommodation Policy and Standards Manual, current edition" and any agreements in effect without further cost to the DEPARTMENT or it's CONTRACTOR.

8. For the purpose of utility coordination, relocation and reimbursement matters, the OWNER shall cooperate with the CONTRACTOR in the same manner as if coordinating directly with the DEPARTMENT in accordance with the laws of the State of Georgia, the DEPARTMENT'S "Utility Accommodation Policy and Standards Manual, current edition" and any agreements in effect between the DEPARTMENT and OWNER. The OWNER agrees to cooperate in good faith with the CONTRACTOR and to respond to all requests for information or meetings required to reach a resolution of any disputed items.

The Memorandum of Understanding will be incorporated into the project contract by reference or Exhibit.

APPROVED FOR THE OWNER BY:

(Signature) (Date) 8/23/11

VP of Engineering & Technology
(Title)

APPROVED FOR THE DEPARTMENT BY:

(Signature) Jeff Baker TLB (Date) 9-2-11

STATE UTILITIES ENGINEER

REVISED/ADDED 547 E

Date: July 5, 2001
First Use Date 2001 Specifications: November 1, 2002
Revised November 5, 2007
Revised July 29, 2009
Revised September 28, 2009

DEPARTMENT OF TRANSPORTATION
STATE OF GEORGIA

SPECIAL PROVISION

Section 300—General Specifications for Base and Subbase Courses

Delete Subsection 300.3.02.H and substitute the following:

H. Fine Grading Equipment

An approved fine grading machine is required for finishing the base and subbase material supporting Portland cement concrete pavement or hot mix asphaltic concrete pavement. Ensure fine grader:

- Is self-propelled and track driven.
- Is capable of trimming and finishing the base and subbase to the specified tolerances utilizing a rotating cutter head in front of a strike-off screed.
- Spans at least one lane width and is controlled automatically by direct contact with a string line or a combination of string line and existing pavement as appropriate.
- Is capable of trimming and finishing base and subbase to the specified tolerances.

Furnish, place, and maintain the necessary string lines to provide continuous line and grade reference to the fine grader control system. GPS controlled equipment can be used in lieu of string lines.

For Graded Aggregate Base construction, a motor grader equipped with GPS controlled equipment can be used as an option for fine grading.

GPS controlled Equipment will include but is not limited to:
1. Ability to read electronic files containing Department supplied data used to design the project.
2. Fixed or movable base station setup on the project to serve as a point of reference for the project. As the project progresses, the movable base station shall be moved for proper system function. If the base station is at a fixed location, radio repeaters will be utilized to ensure the signals from the base station are received throughout the project.
3. A GPS sensor mounted atop a mast affixed to the cutting blade. The masts will be arranged in a dual mast setup with a mast on each end of the blade attachment or in a lone mast setup. The sensor will be able to receive signals from the base station and/or a laser transmitter.
4. A blade position sensor with the ability to detect blade attitude and elevation of the cutting blade and relay this information to the operator. Blade attitude is defined as the orientation of the blade with respect to the three spatial axes in relation to a reference plane.

5. An operator-visible display allowing the operator to visually receive all necessary data in real-time from the GPS system and the cutting blade to properly construct the section to grade. The display will also reflect any changes made by the operator to any operation of the cutting blade.
6. If conformity to the cross sections with the prior listed equipment is unsatisfactory, provide a laser transmitter placed no farther than 800 feet (244 m) from the fine grading equipment. Projects having work progressing at different work sites more than 800 feet (244 m) apart necessitate the use of more than one laser transmitter to ensure accuracy. Select a location for the laser transmitter having a change in elevation of 25 feet (7.62 m) or less from the laser transmitter to the sensor mounted on the cutting blade. If project geography necessitates the use of more than one laser transmitter, the setup of the transmitters will be set to ensure the elevation difference between two consecutive transmitters in an array is not more than 25 feet (7.62 m); and this array cannot exceed a total change in elevation of 100 feet (30.5 m).

Office of Materials & Research

November 13, 2008

DEPARTMENT OF TRANSPORTATION
STATE OF GEORGIA

SPECIAL PROVISION

PROJECT No. CSMSL-0008-00(690), Chatham County
P. I. NO. 0008690

SECTION 307 – IMPERMEABLE MEMBRANE FOR SUBGRADES, BASINS, DITCHES AND CANALS

Delete Sub-section 307.2 Materials, and add the following:

307.2 Materials

Use waterproofing membrane made of high density polyethylene (HDPE) that meets the requirements of Special Provision Section 888.

307.2.01 Delivery, Storage and Handling

General Provisions 101 through 150.

Delete Sub-section 307.3.05.B Placement, and add the following:

Prior to placing waterproofing membrane, remove any objects from the ground that would tend to puncture the membrane. Spread the membrane as uniformly as practical over the contour of the ground to avoid looseness. Place according to the Plans. Protect the membrane from chemicals and prolonged sunlight. Join sections of membranes by thermal bonding using a wedge welder or similar device. Ensure that the membrane has seam strengths at least 90% of the membrane strength.

Office of Materials and Research

REVISED/ADDED

TABLE 4-1: REVIEWS

Submittal Description	Format	Quantity	Delivery Date*	Review Period*	Review Type	Comment
Basis of Design	HC, PDF	3, 1	NTP+7	14	Accepted by Engineer	
Schedule – including review times	HC, PDF	3, 1	NTP+14	30	Accepted by Engineer	
QC/QA Plan	HC, PDF	3, 1	NTP+14	21	Accepted by Engineer	
Environmental Comprehensive Compliance Plan	HC, PDF	3,1	NTP+30	30	Accepted by Engineer	
Right of Way Acquisition Plan	HC, PDF	3,1	NTP+30	30	Accepted by Engineer	
Worksite Utility Control Supervisor	HC, PDF	3, 1	PAS	21	Accepted by Engineer	
Worksite Erosion Control Supervisor Qualifications	HC, PDF	3, 1	PAS	21	Accepted by Engineer	
Traffic Control Supervisor Qualifications	HC, PDF	3, 1	PAS	21	Accepted by Engineer	
Construction Traffic Control Plan	HC, PDF	3,3	PAS	21	See Specification 150	
Preliminary Plans (including all roadway plan components, erosion control plans, signing and marking, lighting design, ITS, etc…)	FS, HS, PDF	2, 18, 1	PAS	40	Accepted by Engineer	Incl overhead sign details/clearance Department to review, quantify environmental impacts and amend permit.
Final Plans (including all roadway plan components, erosion control plans, signing and marking, lighting design, ITS, etc…)	FS, HS, PDF	2, 20, 1	PAS	30	Accepted by Engineer	
Notice of Intent (NOI) with final/signed Erosion Control Plans	HS, PDF	3,1	PAS	NA	EPD letter stating plans do not contain deficiencies.	The Department will submit final/signed Erosion Control Plans to EPD for review prior to submittal of the NOI package to EPD. Contractor will address any plan changes required by EPD and to EPD's satisfaction.

REVISED/ADDED

TABLE 4-1: REVIEWS (Continued)

Submittal Description	Format	Quantity	Delivery Date*	Review Period*	Review Type	Comment
Preliminary Structures • Bridge Plans • Wall Layouts • Hydraulic Study	FS,HS,PDF,HC	2,3,1	PAS	30	Accepted by Engineer	See Section 999.3.C.3h and .i for information on hydraulic studies
100% Structures • Bridge Plans • Wall Plans • Design Notes	FS,HS, PDF,HC	2,3,1	PAS	15 per location or 75 days total	Accepted by Engineer	Bridge Office requires 15 days per bridge or wall location for review of plans. Each review period will not run concurrent with any other bridge or wall review period. Concurrent review of bridges and walls shall be limited to 75 total days.
Geotechnical Reports	HC, PDF	2,1	PAS	30	Accepted by Engineer	
Shop Drawings	FS	6	PAS	30	Accepted by Engineer	
Released for Construction Plans	FS, HS, PDF	4, 9, 1	PAS	NA	NA	Contractor shall provide the Engineer with one HS set for a backcheck prior to Release for Construction authorization.
Plan Revisions During Construction	FS, HS, PDF	3, 5, 1	Per Occurrence	21	Accepted by Engineer	Clear and concise supporting documentation justifying reason for proposed revision to be included with submittal.
As-Built Plans	See 999.3.A.8	See 999.3.A.8	Project Completion (+30)	30	Accepted by Engineer	

October 14, 2011

AMENDMENT TO ADVERTISED CONTRACT

CONTRACT I.D. NUMBER:	B34161-11-000-0
GEORGIA PROJECT NUMBER:	CSMSL-0008-00(690)
PCN:	0008690.01000
COUNTY:	CHATHAM
AMENDMENT NUMBER:	2
LETTING DATE:	November 18, 2011
LETTING NUMBER:	001

THE FOLLOWING CHANGES ARE HEREBY MADE TO THIS CONTRACT. THE BIDDER IS RESPONSIBLE FOR MAKING ANY NECESSARY CHANGES IN INK IN THE PROPOSAL. BIDDER SHALL ACKNOWLEDGE THIS AMENDMENT BY CHECKING THE APPROPRIATE SPACE ON THE PROPOSAL SIGNATURE PAGE.
****

1. **Add** the attached Special Provision Section 108-Prosecution and Progress, 9 pages, dated October 4, 2011, to the proposal.

2. **Delete** Special Provision Section 108-Prosecution and Progress, dated August 19, 2011, from the proposal, **and Substitute** the attached Special Provision Section 108-Prosecution and Progress, with a revised date of October 12, 2011, in the proposal.

3. **Delete** Special Provision Section 150-Traffic Control, dated August 19, 2011, from the proposal, **and Substitute** the attached Special Provision Section 150-Traffic Control, with a revised date of October 12, 2011, in the proposal.

4. Proposal Page 658, Special Provision Section 999-Design-Build Project; **Delete** Subsection 999.1.C.12 **and Substitute** the following:

   “Paved local access road from Pierce Ave to the now or formerly Rachel Royal property and all other properties which previously had access on Flonnel shall be on GDOT Right-of-Way. Pavement structure shall be 8” depth GAB, 3” 19 mm asphaltic concrete, 1.5” 12.5 mm asphaltic concrete. Width shall be 16-ft minimum.”

5. Proposal Page 652, Special Provision Section 999-Design-Build Project; Subsection 999.1.C; **Add** the following:

   50. Ensure design and construction meets all Repository for Online Access to Documentation and Standards (ROADS) updates posted by 11/01/2011.

AMENDMENT TO ADVERTISED CONTRACT (continued):

51. Dual 30" Southern Natural Gas (SNG) pipes as described in Preliminary Engineering Report developed by SNG which was uploaded to FTP site on Sept 30, 2011, shall be retained in place. Ensure design and construction meets all recommendations provided as part of the report.

52. All utility relocations and associated costs required for utility owners that checked Box B on the provided MOUs are to be included within the Design-Build contract bid.

6. Proposal Page 663, Special Provision Section 999-Design-Build Project; **Revise** Subsection 999.1.E.6 to read as follows:

"To proceed to Construction, the Special/Technical Studies and the GEPA document must have addressed all project changes that would affect environmental resources and have addressed all the commitments on the commitments table. Should there be discrepancies, updated Special/Technical Studies and an updated GEPA document may be required. Additional costs and time delays will not be considered due to proposed design changes that impact the GEPA document. Final design must be able to obtain an approved GEPA document."

7. Proposal Page 704, Special Provision Section 999-Design-Build Project; **Delete** Subsection 999.3.E.18.

DAVID E. HOGE
STATE TRANSPORTATION OFFICE ENGINEER

Date: October 30, 2008
Revised: October 4, 2011
(DESIGN BUILD)

DEPARTMENT OF TRANSPORTATION
STATE OF GEORGIA

SPECIAL PROVISION

PROJECT NO. CSMSL-0008-00(690), CHATHAM COUNTY
P. I. NO. 0008690

Section108.03—Prosecution and Progress

Delete section 108.03 and substitute the following:

A. General Requirements

The Contractor shall provide a project schedule using the critical path method (CPM). This project schedule, including baseline and all updates, shall be referred to as the Schedule of Record.

The schedule shall show the various activities of work in sufficient detail to demonstrate a reasonable and workable plan to complete the work in the specified contract time. Schedule activities shall be cost loaded at a minimum to the Work Breakdown Structure (WBS) level that ties to the accepted Schedule of Values.

The Contractor shall be responsible for ensuring that all work sequences are logical and that the schedule indicates a coordinated plan. The schedule shall indicate the order and interdependence of activities and the sequence for accomplishing the work.

The schedule shall include sufficient detail to allow the Engineer to readily identify the work and evaluate the progress of each activity. The schedule shall include activities for all work to be performed by the Contractor, subcontractors and suppliers. The schedule shall also include activities specific to the project to be performed by the Department, other governmental bodies, regulatory agencies, utilities and any others necessary to complete the work. The schedule shall reflect the scope of work, design, construction phasing, maintenance of traffic requirements, environmental requirements, utility and railroad coordination, coordination with other contractors, intermediate completion dates, the contract completion date, and any other work or milestones established in the contract. The schedule shall include activities for working and shop drawing preparation, Contractor submittals, submittal review time by the Department, material procurement and fabrication, and the delivery of materials, plant, and equipment and other similar activities. All field work activities (besides any activities representing general conditions) should be deliverable-based and defined in a manner such that start and end dates can be determined through field observation/ inspection.

Failure by the Contractor to include any element of work or to accurately reflect the relationships among the work activities required for performance of the Contract does not excuse the Contractor from completing all work within the specified time at no additional time or cost to the Department, notwithstanding the acceptance of the schedule by the Department.

The Contractor shall be responsible for implementing and executing the work specified in the contract in strict conformance with the Schedule of Record. The Schedule of Record shall be the Contractor's work plan for completing the entire Contract as specified in the Contract Documents. Failure of the Contractor to adhere to the

Schedule of Record will be cause for the Engineer to deny all requests for additional compensation or extensions in the Contract duration and may result in the Engineer withholding pay estimates.

The existence of a Schedule of Record including any required update(s), as stated in 108.03.D is a condition precedent to the Contractor having any right to the granting of an extension of contract time or any monetary compensation arising out of any delay. Contractor's failure to have a Schedule of Record, including any required update(s) , for the period of potential impact, or in the event the Schedule of Record and applicable updates do not reflect the actual status of the project or fail to accurately show the true critical or non-critical activities for the period of potential impact, will result in any entitlement determination as to time and/or money for such period of potential impact being limited solely to the Department's analysis and identification of the actual critical and non-critical activities.

B. Definitions

The following definitions shall be applied to the terms used in this specification and shall not be taken to modify in any way the definitions in 101.01 through 101.83.

Activity – A discrete, identifiable task or operation that takes time, has a definable start and stop date, furthers the work's progress, and can be used to plan, schedule, and monitor a project.

Activity Calendar – A set of days assigned to a specific activity on which work for the activity may be scheduled.

Activity Calendar Day – A day on which work is scheduled to be performed on a specific activity.

Activity Identification (ID) Number – A unique, alphanumeric, identification code assigned to a specific activity.

Activity Network Diagram – A graphic representation of a CPM schedule, including a timescale, which shows the relationships among activities.

As-built Schedule - The last monthly update schedule depicting the actual start and finish dates for each activity.

Bar Chart – A graphic representation of a schedule without relationship lines displayed. A timescale appears along the horizontal axis.

Baseline Schedule – A baseline CPM schedule showing the original plan to complete the entire project.

Calendar Day – As defined in 101.12.

Calendar ID – An alphanumeric identification code assigned to an activity calendar.

Constraint – A restriction imposed on the start or finish dates of an activity that modifies or overrides the activity's logic relationships.

Contract Completion Date – The original date or revised date specified in the contract for completion of the project.

Controlling Activity –Activity or work item having the least amount of float, which if not completed as scheduled would result in delaying the scheduled completion date of the project.

Schedule of Record – A baseline, monthly update, or a revised CPM schedule accepted by the Department

Critical Activity – Any activity on the critical path.

Critical Path – The longest path of activities which determines the scheduled completion date of the project.

Data Date – The first day in an Initial or a Baseline Schedule and the first day for performance of the work remaining in a Monthly Update Schedule or a Revised Schedule.

Free Float – The amount of time an activity can be delayed and not delay a successor.

Initial Schedule – A schedule showing the original plan for the first 60 calendar days of work.

Intermediate Completion Date – A date specified in the contract for completion of an interim milestone, phase or other portion of the project.

Milestone – An activity with no duration that is typically used to represent the beginning or end of the project or an interim phase. Includes, but is not limited to, intermediate completion dates and the contract completion date.

Monthly Update Schedule – A schedule produced by incorporating the project's actual progress into the baseline schedule or a revised schedule.

Open End – The condition that exists when an activity has either no predecessor or no successor, or when an activity's only predecessor relationship is a finish-to-finish or only successor relationship is a start-to start.

Original Duration – The estimated time, expressed in activity calendar days, required to perform an activity.

Predecessor – An activity that is defined by schedule logic to precede another activity. A predecessor may control the start or finish date of its successor.

Relationship – The interdependence among activities. Relationships link an activity to predecessors and successors.

Remaining Duration – The estimated time, expressed in activity calendar days, required to complete an activity.

Revised Schedule – A revised schedule that includes a significant modification to the schedule's logic or activity durations.

Schedule – A Critical Path Method (CPM) schedule showing activities organized by relationships to depict the plan for execution of a project.

Scheduled Completion Date – The completion date forecast by the CPM schedule. The schedule may also forecast intermediate completion dates for milestones, phases, or other portions of the project.

Successor – An activity that is defined by schedule logic to succeed another activity. The start or finish date of a successor may be controlled by its predecessor.

Total Float – The amount of time an activity can be delayed and not delay the contract completion date.

C. Submissions

1. Initial Schedule

The Contractor shall submit an initial schedule to the Engineer for acceptance no later than the day of the pre-construction conference. The submittal shall include a detailed schedule for the first 60 calendar days of work in accordance with 108.03.D and a summary of activities for the balance of the contract. The schedule shall show milestones for intermediate and contract completion dates no later than those specified in the contract. All specified closure or restriction periods, non-work periods or any other time restrictions in the contract shall be addressed in the initial schedule. The initial schedule will be discussed at the pre-construction conference. No work within the project limits shall be performed until the initial schedule is submitted.

The Engineer will provide written notice within 14 calendar days after receipt of the initial schedule that the schedule is either accepted or rejected or that additional information is requested. The Engineer's written notice will identify the reasons for rejection or what additional information is requested. Within 7 calendar days of the Engineer's written notice, the Contractor shall submit a corrected initial schedule that addresses the reasons for rejection and provides any additional information requested.

2. Baseline, Monthly Update and Revised Schedules

a. The Contractor shall submit a baseline schedule in accordance with 108.03.D no later than 45 calendar days after Notice to Proceed.

b. If a baseline schedule is not submitted within the allotted time, the Engineer may withhold all Contract payments until a baseline schedule is submitted. When the Engineer notifies the Contractor that the baseline schedule has been accepted, it will become the Schedule of Record.

c. The Contractor shall submit a monthly update to the baseline schedule in accordance with 108.03.D no later than 7 calendar days after the end of each month during the contract beginning with the month after approval of the baseline schedule. The monthly update shall be submitted with the Contractor's monthly pay application, and the schedule shall reflect the status through the final day of the submitted invoice period. The update schedule shall reflect a new data date, work performed up to, but not including the new data date, and the plan for completing the remaining work. If a monthly update schedule submittal is more than 30 days past due, the Engineer may withhold payment until monthly update schedule submittals are current. When the Engineer notifies the Contractor that the

update to the baseline schedule has been accepted, it will become the Schedule of Record for the period between its data date and the data date of the next accepted update or revision..

d. The Contractor shall submit a revised schedule when any of the following occur:

(1.) There is an actual delay in any critical activity of 7 calendar days or more.

(2.) There is a significant difference, as determined by the Engineer, between the scheduled and actual work sequence.

e. The Engineer will notify the Contractor in writing when a revised schedule is required due to any of the reasons listed above. The Contractor shall submit a revised schedule in accordance with 108.03.D no later than 14 calendar days after notification by the Engineer. The revised schedule shall depict the status of the project on the date of the Engineer's notification for a revised schedule. The schedule shall reflect a new data date, work performed up to, but not including the new data date, and the plan for completing the remaining work.

f. The Engineer may request a revised schedule due to changes in the work. The Engineer will notify the Contractor in writing when a revised schedule is requested. Changes that may initiate a request for a revised schedule include, but are not limited to:

(1.) An increase or decrease in the amount of work due to extra work or force account work.

(2.) An approved increase or decrease in contract time.

(3.) A Department requested change in the phasing or contract time of the project.

g. When a revised schedule is requested by the Engineer, the Contractor shall submit a revised schedule in accordance with 108.03.D no later than 14 calendar days after notification by the Engineer. The revised schedule shall depict the status of the project on the date of the Engineer's request for a revised schedule. The schedule shall reflect a new data date, work performed up to, but not including the new data date, and the plan for completing the remaining work.

h. If a revised schedule is not submitted within 30 days of written notification, the Engineer may withhold all Contract payments until the revised schedule is submitted.

i. The Contractor may request to submit a revised schedule to reflect changes in the plan to perform the work. When a revised schedule is proposed by the Contractor, the Contractor shall provide the Engineer with a written notice 7 calendar days prior to submitting the revised schedule. The notice shall include a description of the changes to be made and the reason for the changes. The revised schedule shall be submitted in accordance with 108.03.D and shall depict the status of the project on the date of the Contractor's written notice to the Engineer. The schedule shall reflect a new data date, work performed up to, but not including the new data date, and the plan for completing the remaining work.

j. A revised schedule submitted at the request of the Contractor will not be considered to be the Schedule of Record until accepted by the Engineer.

3. As-Built Schedule

The Contractor shall submit an as-built schedule in accordance with 108.03.D no later than 30 calendar days after completion of contract work. The as-built schedule shall depict the actual start and finish dates for each activity.

The as-built schedule shall contain a written certificate signed by the Contractor's project manager stating "To my knowledge, the enclosed as-built schedule reflects the actual start and finish dates of the actual activities for the project contained herein."

4. Acceptance of Schedules

The Engineer will provide written notice within 14 calendar days of receipt of a baseline, monthly update, revised or as-built schedule that the schedule is either accepted or rejected or that additional information is requested. The Engineer's written notice will identify the reasons for rejection or what additional information is requested. Within 14 calendar days of the Engineer's written notice, the Contractor shall submit a corrected baseline, monthly update, revised or as-built schedule that addresses the reasons for rejection and provides any additional information requested. If the Engineer does not respond in writing to the submittal of a schedule within the allotted time, the schedule shall be considered to be accepted.

The Engineer's review of a submitted schedule will be for compliance with the specifications. Acceptance by the Engineer does not relieve the Contractor of responsibility for the accuracy or feasibility of the schedule. Acceptance of a schedule does not constitute a modification of the contract or endorsement or validation of the Contractor's logic, activity durations, or assumptions in creating the schedule. Acceptance of a schedule does not guarantee that the project can be performed or completed as scheduled. Omissions and errors in a schedule shall be corrected by submittal of a revised schedule and will not entitle the Contractor to additional compensation or contract time.

5. Float and Scheduled Completion

Total float belongs to the project and shall be a shared commodity between the Contractor and the Department. Float is not for the exclusive use or benefit of either party. Either party has full use of float until is it depleted.

Float generated during the course of the project due to the efficiencies of either party shall be considered to be part of total float.

Negative float generated during the course of the project will not be a basis for requesting time extensions. Time extension requests shall be developed in accordance with Section 108.07.E.

A schedule may indicate a scheduled completion date in advance of the contract completion date. However, the Department shall not be liable in any way for the Contractor's failure to complete the project prior to the contract completion date. Any costs incurred by the Contractor as a result of such a failure shall be the responsibility of the Contractor. The Contractor will not be entitled to claim or recover any such cost from the Department.

An accepted schedule that indicates a scheduled completion date in advance of the contract completion date will be considered to have total float equal to the time between the scheduled completion date and the contract completion date.

When a contract has an incentive/disincentive date for all or a portion of the work, and the Contractor elects to show a completion date in advance of the contract completion date, the Contractor shall show an activity in the schedule for accruing incentive. The duration of this activity shall be the length of time, in calendar days, between the Contractor's scheduled completion date and the contract completion date. The Contractor may assign the activity a duration up to and including the number of days necessary to earn the specified maximum incentive. Any time between a scheduled completion date earlier than the maximum incentive date and the maximum incentive date will be considered to be part of total float.

D. Schedule Technical Requirements

The schedule shall be generated using software fully compatible with MS Project version 2007 or later and Primavera version P6 7.0 or later.

The schedule shall at a minimum include codes for project phase, location of work and responsibility for each activity. Additional coding fields may be used if approved by the Engineer.

Each schedule submittal shall include the following:

1. A letter of transmittal identifying the schedule submission.
2. A narrative report in accordance with 108.03.E
3. A compact disc (CD) containing an electronic file of the schedule in a format that is fully compatible with and may be directly imported into MS Project version 2007 or later or Primavera version P6 7.0 or later without any loss or modification of data or need for any conversion or other software. Any electronic schedule file submitted by the Contractor that is not fully compatible with the Department's software will be rejected. The critical path in a bar chart format created using the longest path sort, grouped (banded) by phase and sorted by early start dates.
4. A full color plot of the activity network diagram on 11 x 17 or 22 x 34 paper in landscape layout in a time scale suitable to provide sufficient detail. Other formats may be accepted with prior approval by the Engineer. Arrows shall be used to show the relationships between activities on the activity network diagram. The critical path and critical activities shall be plotted in red.
5. Each page of the schedule plot shall at a minimum include a column for each of the following:

a. Activity ID

b. Activity description

c. Original duration

d. Remaining duration

e. Early start

f. Early finish

g. Late start

h. Late finish

i. Total Float

j. Percent Complete

6. Each page of the schedule plot shall include a legend with the following information:

   a. Contract number

   b. District

   c. Name of the Contractor

   d. Project location

   e. Notice to Proceed date

   f. Original contract completion date

   g. Revised contract completion date (as applicable)

   h. Data date

7. A predecessor/successor report with the following information for each activity:

   a. Activity ID and description

   b. Original duration

   c. Remaining duration

   d. Calendar ID

   e. Early start date

   f. Early finish date

   g. Late start date

   h. Late finish date

   i. Total float

   j. Relationship type

   k. Lags

   l. Constraints, if approved by the Engineer.

Each activity shown on the Schedule of Record shall meet the following requirements:

1. Each activity shall have a unique activity identification number which shall not be modified or re-assigned to different work activities once assigned to an activity in the network logic diagram.
2. Each activity shall have a unique description specifying the work type and location.
3. Each activity description shall describe work associated with only one operation.

4. All non-procurement activities shall have an original duration not to exceed 20 calendar days unless approved by the Engineer.
5. Activities for submittal reviews by the Department shall be 30 calendars days unless stated otherwise in the contract.
6. Each activity, except the first activity, shall have at least one predecessor.
7. Each activity, except the last activity, shall have at least one successor.
8. Activity relationships shall be finish-to-start, finish-to-finish or start-to-start with no leads or lags.
9. The use of lags with a negative value shall not be allowed on any activity relationship type.
10. All activities shall have their start and finish tied to the logic of the schedule.
11. Activities shall not have constraints unless approved by the Engineer, with the exception of, when used for "Project Start", and "Project Completion".
12. Each activity shall have an activity calendar identified. A project may have more than one activity calendar, but only one activity calendar shall be applicable to each activity.
13. Seasonal weather conditions shall be considered and included in the planning of all work per the "GDOT Chart for Converting Working Days to Calendar Days".

The Schedule of Record shall only be calculated using retained logic. Use of the Progress Override option is not acceptable. Schedule duration shall be contiguous. Total float shall be calculated based on finish dates.

E. Narrative Reports

The Contractor shall submit a narrative report with each schedule submission pertaining to the work identified in the schedule. For the initial and baseline schedule submittals, the narrative report shall include the following:

1. An explanation of the overall plan to complete the project, including where the work will begin and how the work and crews will progress through the project.
2. An explanation of the use and application of the workdays per week, number of shifts per day, number of hours per shift, holidays observed and how the schedule accommodates adverse weather days for each month.
3. Description of the work to be completed each season for multi-year projects.
4. A description of any problems or issues.
5. A description of any delays, including identification of any delayed activities, the type of delay, the cause of the delay, the effect of the delay on other activities and project milestones and identification of actions required to mitigate the delay.
6. A description of the critical path.
7. An explanation of the use of any allowed constraints, including the reason and purpose for each constraint.
8. A statement describing the status of any required permits.
9. A statement describing the reason for the use of each lag.

For each monthly update and revised schedule submittal, the narrative report shall include the following:

1. A description of the status of the scheduled completion date, focusing on any changes since the previous submission.
2. An explanation if the scheduled completion date is projected to occur after the contract completion date.
3. An explanation if any contract milestone dates are projected to occur after the dates set out in the contract.

4. A description of the work performed since the last schedule update.
5. A description of unusual labor, shift, equipment or material conditions or restrictions encountered.
6. A description of any problems encountered or anticipated since the last schedule update.
7. A statement that identifies any current and anticipated delays. A discussion of delays in the narrative report does not constitute notice in accordance with 105.13.B.9. The statement should include identification of the delayed activity, the type of delay, the cause of the delay, the effect of the delay on other activities and project milestones and identification of actions required to mitigate the delay.
8. Documentation of any weather-related delays, including the date, length of delay, weather conditions causing the delay, and all information identified in item # 7 above.
9. A description of the critical path.
10. A description of changes in the critical path and any contract milestone dates from the last schedule update.
11. A report that identifies the changes made between the previous schedule update and the current proposed schedule, including, but not limited to:

    a. Data date

    b. Completion date

    c. Activity code assignments

    d. Schedule calculation options

    e. Activity descriptions

    f. Added activities

    g. Deleted activities

    h. Added activity relationships

    i. Deleted activity relationships

    j. Activity original durations

    k. Activity remaining durations

    l. Activity actual start and finishes

    m. Percent complete

    n. Constraints

    o. Activity coding for phase, location and assigned contractor

11. A statement providing status of pending items, including, but not limited to:

    a. Permits

    b. Change orders

    c. Time extension requests

F. Extension of Contract Time

If the Contractor believes work on the contract has been delayed for reasons beyond its control, a written request for extension of contract time may be submitted in accordance with 108.07.E. Upon receipt of the request, the Department will perform a delay analysis by comparing the Schedule of Record at the time of the delay with as-built information of the work actually performed. The analysis will identify the actual critical path of work and progress on the critical path and will be used to determine the amount of contract time extension that may be warranted.

The Contractor's request for extension of time shall include its own analysis, using a method approved by the Engineer, of the delay using the Schedule of Record at the time of delay and as-built information of work actually performed.

The determination of contract time extension will be based solely on the Department's analysis.

Delays or suspensions of work due to the Contractor's failure to comply with the specifications will not be cause for additional compensation or extension of contract time.

G. Measurement

Initial schedule, baseline schedule, as-built schedule, monthly update schedules, and revised schedules will not be measured separately for payment.

H. Payment

All costs necessary to provide initial, baseline and as-built schedules, including the cost of the project scheduler, shall be included in the cost of the pay item for CONSTRUCTION COMPLETE.

All costs necessary to provide monthly update schedules shall be included in the cost of the pay item for CONSTRUCTION COMPLETE.

All costs necessary to provide revised schedules requested by the Engineer shall be included in the cost of the pay item for CONSTRUCTION COMPLETE.

First Use: December 17, 2010
Revised: August 19, 2011
October 12, 2011
(DESIGN BUILD)

DEPARTMENT OF TRANSPORTATION
STATE OF GEORGIA

SPECIAL PROVISION
Project No. 0008690
Chatham County

Section 108 – Prosecution and Progress

Add the following to Subsection 108.08:

C. For this project, an overall completion date has been established. In order to minimize the disruption of normal traffic flow, separate completion times are specified for those portions of the work requiring closing of lanes or detours as specified in Subsection 150.11.

1. Lane Closures
   Failure to maintain or reopen lanes as specified in Section 150.11.A, 150.11.B, 150.11.C, or 150.11.D will result in the assessment of Liquidated Damages at a rate of $1,000.00 per hour or any part thereof.

2. Utility Conflict Matrix
   Failure to submit to the Department a Utility Conflict Matrix in the Department's prescribed format within 120 days of Notice to Proceed shall result in assessment of liquidated damages in rate of $1,000.00 per calendar day until the matrix has been received.

3. Preliminary Utility Status Report
   Failure to submit to the Department a Preliminary Utility Status Report within 180 days after the Notice to Proceed has been given for the contract shall result in assessment of liquidated damages in rate of $1,000.00 per calendar day until the report has been received.

These rates are cumulative and in addition to Liquidated Damages that may be assessed in accordance with Subsection 108.08 for failure to complete the overall project.

August 19, 2011
October 12, 2011
(DESIGN BUILD)

DEPARTMENT OF TRANSPORTATION
STATE OF GEORGIA

SPECIAL PROVISION

PROJECT: CSMSL-0008-00(690)
CHATHAM COUNTY
P.I. NO: 0008690

SECTION 150 – TRAFFIC CONTROL

ADD the following:

150.11 SPECIAL CONDITIONS:

A. SR 307/Bourne Ave

1. The Contractor shall maintain two (2) lanes of traffic in each direction at all times.
2. The Contractor shall notify the Georgia Port Authority 7 days in advance of any change of traffic pattern.

B. Pierce Ave between SR 21/Augusta Rd and Jimmy Deloach Parkway

1. The Contractor shall maintain one (1) lane of traffic in each direction at all times, including the turn lanes at the intersection of SR 21/Augusta Road and Pierce Avenue.
2. The Contractor shall notify the Georgia Port Authority 7 days in advance of any change in traffic pattern.

C. SR 21/Augusta Rd

1. The Contractor shall not install lane closures, pace traffic or move equipment or materials at any time.
2. Shoulder closures are allowed.

D. SR 30/Bonnybridge Road, Crossgate Road, and Grange Road

1. The contractor shall not install lane closures, pace traffic or move equipment or materials between the hours of 6:00 am to 9:00 am and between the hours of 4:00 pm to 7:00 pm, Monday thru Friday.
2. The Contractor shall notify the Georgia Port Authority 7 days in advance of lane closures.

November 4, 2011

AMENDMENT TO ADVERTISED CONTRACT

CONTRACT I.D. NUMBER:	B34161-11-000-0
GEORGIA PROJECT NUMBER:	CSMSL-0008-00(690)
PCN:	0008690.01000
COUNTY:	CHATHAM
AMENDMENT NUMBER:	3
LETTING DATE:	November 18, 2011
LETTING NUMBER:	001

THE FOLLOWING CHANGES ARE HEREBY MADE TO THIS CONTRACT. THE BIDDER IS RESPONSIBLE FOR MAKING ANY NECESSARY CHANGES IN INK IN THE PROPOSAL. BIDDER SHALL ACKNOWLEDGE THIS AMENDMENT BY CHECKING THE APPROPRIATE SPACE ON THE PROPOSAL SIGNATURE PAGE.
****

1. **Delete** the “Prime Contractor’s Work Authorization Certification/E Verify” from the proposal, **and Substitute** the attached “Georgia Security and Immigration Compliance Act Affidavit”, 1 page, with a revised date of August 22, 2011, in the proposal.

2. Special Provision Section 102-Bidding Requirements and Conditions; **Make** the following change:

   A. Subsection 102.07 I; **Delete** any and all references to “Prime Contractor’s Work Authorization Certification/ E Verify”, **and Substitute** "Georgia Security and Immigration Compliance Act Affidavit".

   B. Subsection 102.15; **Delete** any and all references to “Prime Contractor’s Work Authorization Certification/ E Verify”, **and Substitute** "Georgia Security and Immigration Compliance Act Affidavit".

3. Proposal Page 658, Special Provision Section 999-Design Build Project, Subsection 999.l.C; **Delete** Subsection 999.l.C.12 and **Substitute** the following:

   “12. Paved local access road from Pierce Ave to the now or formerly Rachel Royal property and all other properties which previously had access on Flonnel shall be on GDOT Right-of-Way. Pavement structure shall be 8" depth GAB, 3" 19 mm Superpave, GP 1 OR 2, lncl Bitum Matl & H Lime, 1.5'' 12.5 mm Superpave, GP 1 OR 2, Incl Polymer-Modified Bitum Matl & H Lime. Width shall be 16-ft minimum.”

AMENDMENT TO ADVERTISED CONTRACT (continued):

4. Proposal Page 659, Special Provision Section 999-Design Build Project, Subsection 999.l.C; **Delete** Subsection 999.l.C.23 and 24 and **Substitute** the following:

"23. Ensure the pavement design meets or exceeds the pavement design as follows:

Paving for Jimmy Deloach Connector, Ramps, Grange Rd, and SR 307/Bourne Avenue			
Travel Lanes		**Shoulders**	
Material	Spread Rate	Material	Spread Rate
Plain Portland Cement Concrete Pvmt, Class 1 Concrete, 12 Inch Thick	N/A	Plain Portland Cement Concrete Pvmt, Class 1 Concrete, 12 Inch Thick	N/A
19 mm Superpave, GP 1 OR 2, Incl Bitum Matl & H Lime	330 lb/sy	19 mm Superpave, GP 1 OR 2, Incl Bitum Matl & H Lime	330 lb/sy
Graded Aggregate Base Course – 12 Inch Depth Incl Matl	N/A	Graded Aggregate Base Course – 12 Inch Depth Incl Matl	N/A
Paving for Pierce Avenue			

Travel Lanes		Shoulders	
Material	Spread Rate	Material	Spread Rate
12.5 mm Superpave, GP 1 OR 2, Incl Polymer- Modified Bitum Matl & H Lime	165 lb/sy	12.5 mm Superpave, GP 1 OR 2, Incl Bitum Matl & H Lime	165 lb/sy
19 mm Superpave, GP 1 OR 2, Incl Bitum Matl & H Lime	220 lb/sy	19 mm Superpave, GP 1 OR 2, Incl Matl & H Lime	220 lb/sy
25 mm Superpave, GP 1 OR 2, Incl Bitum Matl & H Lime	660 lb/sy	25 mm Superpave, GP 1 OR 2, Incl Bitum Matl & H Lime	660 lb/sy
Graded Aggregate Base Course – 12 Inch Depth Incl Matl	N/A	Graded Aggregate Base Course – 12 Inch Depth Incl Matl	N/A

24. Place all driveways, where access is allowed, as directed by the Engineer in accordance with Rules and Regulations for Control and Protection of Department of Transportation Rights-of-Way. Pave all driveways to the Right-of-Way line, or tie-in point, whichever is greater. Repave all non-concrete driveways that are to be reconstructed with asphalt. Repave concrete driveways with concrete. The driveway locations indicated on the plans are from the best available data. Construct (unless otherwise noted on the plans) new driveways to match the actual field location of existing driveways where they are not in conflict with the Rules and Regulations. Obtain the approval of the

AMENDMENT TO ADVERTISED CONTRACT (continued):

Engineer prior to making any revisions such as to location, width and/or number of drives to be constructed. Driveways shall be paved as follows:

Residential Asphaltic Concrete Driveways	
Material	Spread Rate
12.5 mm Superpave, GP 1 OR 2, Incl Bitum Matl & H Lime	165 lb/sy
19 mm Superpave, GP 1 OR 2, Incl Bitum Matl & H Lime	220 lb/sy
Graded Aggregate Base Course – 6 Inch Depth Incl Matl	N/A
Commercial Asphaltic Concrete Driveways	
Material	Spread Rate
12.5 mm Superpave, GP 1 OR 2, Incl Bitum Matl & H Lime	165 lb/sy
19 mm Superpave, GP 1 OR 2, Incl Bitum Matl & H Lime	220 lb/sy
25 mm Superpave, GP 1 OR 2, Incl Bitum Matl & H Lime	330 lb/sy
Graded Aggregate Base Course – 8 Inch Depth Incl Matl	N/A
Residential Concrete Driveways	
Material	Spread Rate

Portland Cement Concrete – 4”	N/A
GRADED AGGREGATE BASE – 6” DEPTH	N/A
Commercial Concrete Driveways	
Material	Spread Rate
Portland Cement Concrete – 8”	N/A
GRADED AGGREGATE BASE – 10” DEPTH	N/A

AMENDMENT TO ADVERTISED CONTRACT (continued):

5. Proposal Page 661, Special Provision Section 999-Design Build Project, Subsection 999.l.C; **Delete** Subsection 999.l.C.35.a and **Substitute** the following:

   “a. Minimum six month settlement period, for fill construction, is required after the fills have been placed within 6 inches of subgrade to ensure that settlement has stopped before the pavement is constructed.”

DAVID E. HOGE
STATE TRANSPORTATION OFFICE ENGINEER

GEORGIA SECURITY AND IMMIGRATION COMPLIANCE ACT AFFIDAVIT

Contractor(s) Name: _____

Letting: _____

Call No: _____

By executing this affidavit, the undersigned person or entity verifies its compliance with O.C.G.A. § 13-10-91, stating affirmatively that the individual, firm, or corporation which is contracting with the Georgia Department of Transportation has registered with, is authorized to participate in, and is participating in the federal work authorization program commonly known as E-Verify,* in accordance with the applicable provisions and deadlines established in O.C.G.A. § 13-10-91.

The undersigned person or entity further agrees that it will continue to use the federal work authorization program throughout the contract period, and it will contract for the physical performance of services in satisfaction of such contract only with subcontractors who present an affidavit to the undersigned with the information required by O.C.GA. § 13-10-91(b).

The undersigned person or entity further agrees to maintain records of such compliance and provide a copy of each such verification to the Georgia Department of Transportation at the time the subcontractor(s) is retained to perform such service.

_____ _____

EEV / E-Verify™ User Identification Number Date of Authorization

_____ _____

BY: Authorized Officer or Agent Date
(Name of Person or Entity)

_____

Title of Authorized Officer or Agent

_____

Printed Name of Authorized Officer or Agent

SUBSCRIBED AND SWORN
BEFORE ME ON THIS THE

_____ DAY OF _____, 201_

_____ [NOTARY SEAL]

Notary Public

My Commission Expires: _____

*** or any subsequent replacement** operated by the United States Department of Homeland Security or any equivalent federal work authorization program operated by the United States Department of Homeland Security to verify information of newly hired employees, pursuant to the Immigration Reform and Control Act of 1986 (IRCA), P.L. 99-603

Revised 8/22/11

November 9, 2011

AMENDMENT TO ADVERTISED CONTRACT

CONTRACT I.D. NUMBER:	B34161-11-000-0
GEORGIA PROJECT NUMBER:	CSMSL-0008-00(690)
PCN:	0008690.01000
COUNTY:	CHATHAM
AMENDMENT NUMBER:	4
LETTING DATE:	November 18, 2011
LETTING NUMBER:	001

THE FOLLOWING CHANGES ARE HEREBY MADE TO THIS CONTRACT. THE BIDDER IS RESPONSIBLE FOR MAKING ANY NECESSARY CHANGES IN INK IN THE PROPOSAL. BIDDER SHALL ACKNOWLEDGE THIS AMENDMENT BY CHECKING THE APPROPRIATE SPACE ON THE PROPOSAL SIGNATURE PAGE.
****

1. Proposal page 662, Special Provision Section 999-Design Build Project, Subsection 999.l.C; **Add** the following:

   “53. City of Savannah 48” water line will be relocated by Contractor to meet City requirements and price will be included within Design-Build contract bid.”

DAVID E. HOGE
STATE TRANSPORTATION OFFICE ENGINEER

DEPARTMENT OF TRANSPORTATION | STATE OF GEORGIA

CONTRACT

CONTRACT IDENTIFICATION NUMBER B34161-11-000-0	DATE CONTRACT EXECUTED
PROJECT NUMBER(S) CSMSL-0008-00(690)	COUNTY(IES) CHATHAM
CONTRACTOR ARCHER WESTERN CONTRACTORS, LTD.	
DESCRIPTION OF IMPROVEMENTS AND FACILITY DESIGN BUILD PROJECT CONSISTING OF 3.140 MILES OF CONSTRUCTION OF THE JIMMY DELOACH CONNECTOR BEGINNING AT SR 307 (BOURNE AVE) AND EXTENDING TO JIMMY DELOACH PKWY.	
AMOUNT OF CONTRACT $72,772,000.00	

THIS AGREEMENT, made and entered into on the Date Contract Executed, specified above, by and between the Department of Transportation, an agency of the State of Georgia, hereinafter called the "Department", party of the first part; and the Contractor named above, hereinafter called the "Contractor", party of the second part;

WITNESSETH THAT:

WHEREAS, the Department desires to construct or improve the Facility described and identified above, and the Contractor desires to furnish and deliver material and to do and perform all the work and labor necessary to construct or improve this Facility;

NOW, THEREFORE, THE PARTIES HERETO, in consideration of ONE DOLLAR ($1.00) in hand paid by the Department to the Contractor, receipt of which is hereby acknowledged, and in consideration of the premises and of the covenants of the other as hereinafter expressed and contained, do hereby agree each with the other as follows:

1. The Contractor promises and agrees to furnish and deliver all the material and to do and perform all the work and labor required to be furnished and delivered, done and performed in and about the improvement or construction of the Facility described above in strict and entire conformity with the provisions of this contract, and the Advertisement, Notice to Contractors, and proposal, copies of which are hereto attached, and the plans and specifications prepared or approved for the project specified above by the Chief Engineer, or his authorized representative, the originals of which are on file in the Offices of the Department of Transportation, and which Advertisement, Notice to Contractors, Proposals and the plans and specifications are hereby made a part of this agreement as fully and to the same effect as if the same had been set forth at length in the body of this agreement.

2. The Department agrees and promises to pay the Contractor for said work, when completed in accordance with the provisions of this contract, the prices set forth in the Proposal, amounting approximately to the Amount of Contract stated above, payments to be made as provided in said specifications Proposal.

3. This work shall be done in accordance with the laws of the State of Georgia under the direct supervision and to the entire satisfaction of the Department of Transportation. All projects financed in whole or in part with Federal funds are subject at all times to the inspection and approval of the U.S. Secretary of Transportation, or his agents, and work thereon shall be done in accordance with Title 23, U. S. Code and the rules and regulations of the U. S. Department of Transportation and the Federal Highway Administration.

4. The decision of the Chief Engineer or his authorized representative upon any questions connected with the execution and fulfillment of this agreement or any failure or delay in the prosecution of the work by the Contractor will be final and conclusive.

ALL REFERENCES in this document, which include all papers, writings, documents, drawings, or photographs used, or to be used, in connection with this document, to “State Highway Department of Georgia”, “State Highway Department”, “Georgia State Highway Department”, “Highway Department”, or "Department” when the context thereof means the State Highway Department of Georgia, mean, and shall be deemed to mean, the Department of Transportation.

THIS AGREEMENT is being executed on the Date Contract Executed, specified above, in Fulton County, Georgia.

IN WITNESS WHEREOF THE PARTIES HAVE SET THEIR HANDS AND AFFIXED THEIR SEALS:

PARTY OF THE FIRST PART

DEPARTMENT OF TRANSPORTATION, STATE OF GEORGIA

WITNESS

ATTESTED BY TREASURER, GEORGIA DOT

WITNESS

BY COMMISSIONER

PARTY OF THE SECOND PART

I attest that the seal imprinted hereon is the corporate seal of the Contractor named above and that the signature which appears hereon is genuine and is that of the President (Vice President) of the corporation who is duly authorized to execute the foregoing document on behalf of the corporation; and that the execution of the foregoing document on behalf of the corporation of the foregoing document on behalf of the corporation has been duly authorized.

CORPORATE CONTRACTOR (1)

ARCHER WESTERN CONTRACTORS, LTD..

(SEAL)

BY PRESIDENT OR VICE PRESIDENT

THIS DAY OF ,

BY SECRETARY OR ASSISTANT SECRETARY (1)

(SEAL)

(SEAL)

I attest that the seal imprinted hereon is the corporate seal of the Contractor named above and that the signature which appears hereon is genuine and is that of the President (Vice President) of the corporation who is duly authorized to execute the foregoing document on behalf of the corporation; and that the execution of the foregoing document on behalf of the corporation of the foregoing document on behalf of the corporation has been duly authorized.

CORPORATE CONTRACTOR (2)

(SEAL)

BY PRESIDENT OR VICE PRESIDENT (2)

THIS DAY OF ,

BY SECRETARY OR ASSISTANT SECRETARY (2)

{SEAL)

(SEAL)

WITNESS (1)

INDIVIDUAL OR PARTNERSHIP CONTRACTOR (1)

{SEAL}

WITNESS (1)

BY OWNER OR PARTNER (1)

(SEAL)

WITNESS (2)

INDIVIDUAL OR PARTNERSHIP CONTRACTOR (2)

(SEAL)

WITNESS (2)

BY OWNER OR PARTNER (2)

(SEAL)

DEPARTMENT OF TRANSPORTATION

PERFORMANCE AND PAYMENT BONDS

(GEORGIA RESIDENT CONTRACTOR)

KNOW ALL MEN BY THESE PRESENTS, That we,

ARCHER WESTERN CONTRACTORS, LTD.
ATLANTA, GA

as Principal, and the Corporation or Corporations hereinafter designated as Surety A or Surety A to Surety _____ inclusive, as Surety or Sureties, are held and firmly bound, both "jointly and severally" as well as "severally" only, unto the Department of Transportation in the penal sum of 120% of the Original Contract Amount of:

Seventy Two Million Seven Hundred Seventy Two Thousand Dollars And No Cents ($72,772,000.00)

for the use of the obligee herein named and of all persons doing work or furnishing skill, tools, machinery, or materials under or for the purpose of this contract hereinafter described; Provided, that it is mutually understood and agreed between the Principal and Surety and/or Sureties and the Obligee herein named that this bond is to be construed as being in compliance with and subject to the provisions of Sections 13-10-1 and 36-82-101 of the Official Code of Georgia Annotated, as well as the other applicable provisions, and that in compliance with the aforesaid sections this instrument is intended and is to be construed as two separate bonds, namely, as a "performance bond" in the full penal sum heretofore set forth, and as a "payment bond", in an amount equal to 110 percent of the full penal sum heretofore named and that both bonds shall be construed to be in full force and effect at the same time, as the case may be, and that the obligations shall be several, in the full amount of said penal sum, as to each type of bond; and for the payment of which sums well and truly to be made we bind ourselves, our heirs, executors, administrators, and successors, jointly and severally, firmly by these presents; Provided, that the Sureties bind themselves in such sums "jointly and severally", as well as "severally" only for the purpose of allowing a joint action or actions against any or all of us, and for all other purposes each Surety binds itself, jointly and severally with the Principal, and with each other, for 210 percent of the penal sum of this bond, and provided further that, while each Surety binds itself, jointly and severally with the Principal, for 210 percent of the penal sum herein provided for, the total liability of all Sureties shall not exceed the total penal sum heretofore provided for as to each of the respective obligations herein provided for.

Signed and sealed this the _____ day of _____ , _____ .

Surety	Name and State of Incorporation	Name and Address of Georgia Resident Agent
A		Agent Name:
B		Agent Address:
C		Agent Phone Number:
D		*** PLEASE PRINT ALL INFORMATION.***

Bond # _____

Note: The Surety Company for Performance and Payment Bonds shall be a company acceptable as Surety on Federal Bonds and listed in the current Federal Register and licensed in the State of Georgia.

THE CONDITIONS OF THE FOREGOING OBLIGATIONS is such that whereas the above named Principal has entered into a contract with said Department of Transportation bearing even date herewith for the Construction of:

DESIGN BUILD PROJECT CONSISTING OF 3.140 MILES OF CONSTRUCTION OF THE JIMMY DELOACH CONNECTOR BEGINNING AT SR 307 (BOURNE AVE) AND EXTENDING TO JIMMY DELOACH PKWY., OTHERWISE KNOWN AS STATE AID PROJECT No. CSMSL-0008-00(690) IN CHATHAM County.

The surety hereby binds itself to provide performance bond and payment bond for work added by Supplemental Agreement(s) and/or Extension Agreement(s), whereby the original Contract amount or the total Project length may be increased by as much as twenty (20) percent without the written assent of the Surety.

Now, THEREFORE, the condition of these obligations is such that if the above named bound Principal shall in all respects comply with the terms and conditions of said contract, including all modifications or extensions thereof, and his obligations thereunder, including the notice to contractors, the plans, general conditions, specifications, special provisions and proposals, therein referred to and made a part thereof, and shall complete the said contract in accordance with its terms and shall save obligee free from all cost and charge that may accrue on account of the doing of the work specified, then this bond, construed as a "performance bond" shall be void, otherwise of full force and effect.

Provided further, that upon the failure of the said Principal to promptly and efficiently prosecute said work, in any respect, in accordance with the contract, the above bound Surety or Sureties shall take charge of said work and complete the contracts at its own expense, pursuant to its terms, receiving, however, any balance of funds in the hands of said Department of Transportation under said contract.

And, further, the condition of these obligations is such that if the above bound Principal shall make prompt payment to all subcontractors and all other persons supplying labor, materials, machinery and equipment furnished for the performance of the work provided for in said contract, as well as all duly authorized modifications thereof which may hereafter be made, including any extension of time to complete the same, then this bond, as a "payment bond", shall be void, otherwise of full force and effect.

It is agreed that, in the event that this bond is executed by more than one surety company, the term "Surety" as used in this bond shall be construed to mean any one or all of such surety companies executing this bond. It is further agreed that such surety companies herein named and executing this bond as surety for the Principal, by mutual agreement between themselves, and with the Principal, and with the obligee herein named, do hereby designate and authorize:

_____

as the "controlling surety".

It is further agreed that the term, “controlling surety”, shall be defined as that one of such sureties herein designated and authorized by all of such sureties, upon whom any notice or other demand may be made by the obligee herein named, or other person having a claim against the Principal under the provisions of this bond, or with whom such obligee, or other such person, may negotiate or deal as to any matter pertaining to the obligations of this bond, and against whom any right of action growing out of this bond may be enforced, as provided for by Sections 36-82-102 through 36-82-105 of the Official Code of Georgia Annotated as fully and effectively as though the same were had or done with each of such named sureties individually, and with the right upon the part of such “controlling surety” to vouch such co-sureties into court to defend any action against it or them arising out of the obligations of this bond, as provided by Section 9-10-13 of the Official Code of Georgia Annotated, or to call upon such co-sureties, in accordance with the terms of any notice, demand, suit, suit at law, or other action, commenced or brought against it by the obligee named herein, or any other person having a claim against the Principal under the conditions and provisions of this bond, or in accordance with any private contract between the sureties executing this bond on behalf of said Principal, it being the purpose and intent of this contract that the obligee named in this bond, or such other person having a claim under the provisions of this bond, may enforce any right that it or they may have growing out of this bond by notice, demand, negotiation, suit, or other appropriate action against the controlling surety only, and such action shall be deemed to be binding upon all the sureties named herein; Provided however, the foregoing notwithstanding, the obligee, or such other person having a claim under this bond, at its or their option, may take such action against any or all of said surety companies.

It is agreed by the parties hereto that in the event the Department of Transportation in making the contract with the Principal herein shall be acting as Agent for the United States Government, or for the County of

CHATHAM

or for both, as well as for itself, then the said Department of Transportation shall have the right in the event of a breach of the contract resulting in loss to the said County or to the United States Government; or to itself, to maintain a suit hereon for the use of itself, or the United States Government, or said County as well as for itself; or said County and said United States Government shall have the right in their own names to maintain a suit herein in the same manner and to the same extent as the Department of Transportation has by virtue of Sections 36-82-104 and 36-82-105 of the Official Code of Georgia Annotated.

IN WITNESS WHEREOF, the said "Principal" and the said "Surety" have duly executed this bond under seal this the _____day of _____, _____.

Signed, Sealed, and Delivered in the presence of us.

Witnesses for Contractor (1)

(1) _____ ARCHER WESTERN CONTRACTORS, LTD. (Seal)

Signature of Witness

_____ _____ (Seal)

Printed Name of Witness Signature of Contractor

(2) _____ _____ (Seal)

Signature of Witness Printed Name of Signee

_____

Printed Name of Witness

Witnesses for Contractor (2)

(1) _____ _____ (Seal)

Signature of Witness

_____ _____ (Seal)

Printed Name of Witness Signature of Contractor

(2) _____ _____ (Seal)

Signature of Witness Printed Name of Signee

_____

Printed Name of Witness

Witnesses for Surety Co. A

_____ (Seal)

(1) _____

Signature of Witness

_____ (Seal)

Signature of Attorney-In-Fact & Georgia Resident Agent

_____

Printed Name of Witness

_____ (Seal)

Printed Name of Attorney-In-Fact & Georgia Resident Agent

(2) _____

Signature of Witness

_____

Printed Name of Witness

Witnesses for Surety Co. B

_____ (Seal)

(1) _____

Signature of Witness

_____ (Seal)

Signature of Attorney-In-Fact & Georgia Resident Agent

_____

Printed Name of Witness

_____ (Seal)

Printed Name of Attorney-In-Fact & Georgia Resident Agent

(2) _____

Signature of Witness

_____

Printed Name of Witness

Witnesses for Surety Co. C

_____ (Seal)

(1) _____

Signature of Witness

_____

Printed Name of Witness

(2) _____

Signature of Witness

_____

Printed Name of Witness

_____ (Seal)

Signature of Attorney-In-Fact & Georgia Resident Agent

_____ (Seal)

Printed Name of Attorney-In-Fact & Georgia Resident Agent

Witnesses for Surety Co. D

_____ (Seal)

(1) _____

Signature of Witness

_____

Printed Name of Witness

(2) _____

Signature of Witness

_____

Printed Name of Witness

_____ (Seal)

Signature of Attorney-In-Fact & Georgia Resident Agent

_____ (Seal)

Printed Name of Attorney-In-Fact & Georgia Resident Agent

COUNTERSIGNED

If this Bond is made by an Out of State Agent, It Must be Countersigned by a Georgia Agent.

By:_____(Seal)
Attorney-In-Fact & Georgia Resident Agent

_____ (Seal)

Signature of Attorney-In-Fact & Georgia Resident Agent

_____ (Seal)

Printed Name of Attorney-In-Fact & Georgia Resident Agent

INSTRUCTIONS:

This Bond is so drawn that it may be executed by a single surety or a multiple surety. In the event of multiple sureties they should be listed in the space provided for Surety “A”, “B”, “C” and “D”. In the event of a single surety, set out this surety as Surety “A” together with the name and address of the Resident Agent.

DEPARTMENT OF TRANSPORTATION PERFORMANCE, PAYMENT, AND NONRESIDENT CONTRACTOR'S TAX BONDS

(NONRESIDENT CONTRACTOR)

KNOW ALL MEN BY THESE PRESENTS, That we,

ARCHER WESTERN CONTRACTORS, LTD.
ATLANTA, GA

as Principal, and the Corporation or Corporations hereinafter designated as Surety A or Surety A to Surety _____ inclusive, as Surety or Sureties, are held and firmly bound, both "jointly and severally" as well as "severally" only, unto the Department of Transportation in the penal sum of 120% of the Original Contract Amount of:

Seventy Two Million Seven Hundred Seventy Two Thousand Dollars And No Cents ($72,772,000.00)

for the use of the obligee herein named and of all persons doing work or furnishing skill, tools, machinery, or materials under or for the purpose of this contract hereinafter described, and for the use of the State and all political subdivisions thereof for all taxes (including contributions due under the employment security law), together with penalties and interest collectible as taxes, which may accrue during the period of this bond on account of the execution and performance of this contract hereinafter described; Provided, that it is mutually understood and agreed between the Principal and Surety and/or Sureties and the Obligee herein named that this bond is to be construed as being in compliance with and subject to the provisions of Sections 13-10-1, 36-82-101, and 48-13-30 through 48-13-38 of the Official Code of Georgia Annotated, as well as the other applicable provisions, and that in compliance with the aforesaid sections this instrument is intended and is to be construed as three separate bonds, namely, as a "performance bond" in the full penal sum heretofore set forth, and as a "payment bond", in the full penal sum heretofore named, and as a "tax bond" in the amount of ten percent of the full penal sum heretofore named and that all bonds shall be construed to be in full force and effect at the same time, as the case may be, and that the obligations shall be several as to each type of bond; and for the payment of which sums well and truly to be made we bind ourselves, our heirs, executors, administrators, and successors, jointly and severally, firmly by these presents; Provided, that the Sureties bind themselves in such sums "jointly and severally", as well as "severally" only for the purpose of allowing a joint action or actions against any or all of us, and for all other purposes each Surety binds itself, jointly and severally with the Principal, and with each other, for 210 percent of the penal sum of this bond, and provided further that, while each Surety binds itself, jointly and severally with the Principal, for 210 percent of penal sum herein provided for, the total liability of all Sureties shall not exceed the total penal sum heretofore provided for as to each of the respective obligations herein provided for.

Signed and sealed this the _____ day of _____ , _____

Surety	Name and State of Incorporation	Name and Address of Georgia Resident Agent
A		Agent Name:
B		Agent Address:
C		Agent Phone Number:
D		

Bond # _____ *** PLEASE PRINT ALL INFORMATION.***

Note: The Surety Company for Performance and Payment Bonds shall be a company acceptable as Surety on Federal Bonds and listed in the current Federal Register and licensed in the State of Georgia.

THE CONDITIONS OF THE FOREGOING OBLIGATIONS is such that whereas the above named Principal has entered into a contract with said Department of Transportation bearing even date herewith for the Construction of:

DESIGN BUILD PROJECT CONSISTING OF 3.140 MILES OF CONSTRUCTION OF THE JIMMY DELOACH CONNECTOR BEGINNING AT SR 307 (BOURNE AVE) AND EXTENDING TO JIMMY DELOACH PKWY., OTHERWISE KNOWN AS STATE AID PROJECT NO. CSMSL-0008-00(690) IN CHATHAM County .

The surety hereby binds itself to provide performance bond and payment bond for work added by Supplemental Agreement(s) and/or Extension Agreement(s), whereby the original Contract amount or the total Project length may be increased by as much as twenty (20) percent without the written assent of the Surety.

Now, THEREFORE, the condition of these obligations is such that if the above named bound Principal shall in all respects comply with the terms and conditions of said contract, including all modifications or extensions thereof, and his obligations thereunder, including the notice to contractors, the plans, general conditions, specifications, special provisions and proposals, therein referred to and made a part thereof, and shall complete the said contract in accordance with its terms and shall save obligee free from all cost and charge that may accrue on account of the doing of the work specified, then this bond, construed as a "performance bond" shall be void, otherwise of full force and effect.

Provided further, that upon the failure of the said Principal to promptly and efficiently prosecute said work, in any respect, in accordance with the contract, the above bound Surety or Sureties shall take charge of said work and complete the contracts at its own expense, pursuant to its terms, receiving, however, any balance of funds in the hands of said Department of Transportation under said contract.

And, further, the condition of these obligations is such that if the above bound Principal shall make prompt payment to all subcontractors and all other persons supplying labor, materials, machinery and equipment furnished for the performance of the work provided for in said contract, as well as all duly authorized modifications thereof which may hereafter be made, including any extension of time to complete the same, then this bond, as a "payment bond", shall be void, otherwise of full force and effect.

And, further, the condition of these obligations is such that if the above bound Principal shall promptly pay to the State of Georgia and the political subdivisions thereof all taxes, including contributions due under the employment security law, together with penalties and interest collectible as taxes, which may accrue during the period of this bond on account of the execution by the Principal of the contract described herein, then this bond, as a "tax bond", shall be void; otherwise it shall remain in full force and effect.

It is agreed that, in the event that this bond is executed by more than one surety company, the term "Surety" as used in this bond shall be construed to mean any one or all of such surety companies executing this bond. It is further agreed that such surety companies herein named and executing this bond as surety for the Principal, by mutual agreement between themselves, and with the Principal, and with the obligee herein named, do hereby designate and authorize:

_____

as the "controlling surety".

It is further agreed that the term, “controlling surety”, shall be defined as that one of such sureties herein designated and authorized by all of such sureties, upon whom any notice or other demand may be made by the obligee herein named, or other person having a claim against the Principal under the provisions of this bond, or with whom such obligee, or other such person, may negotiate or deal as to any matter pertaining to the obligations of this bond, and against whom any right of action growing out of this bond may be enforced, as provided for by Sections 36-82-102 through 36-82-105 of the Official Code of Georgia Annotated as fully and effectively as though the same were had or done with each of such named sureties individually, and with the right upon the part of such “controlling surety” to vouch such co-sureties into court to defend any action against it or them arising out of the obligations of this bond, as provided by Section 9-10-13 of the Official Code of Georgia Annotated, or to call upon such co-sureties, in accordance with the terms of any notice, demand, suit, suit at law, or other action, commenced or brought against it by the obligee named herein, or any other person having a claim against the Principal under the conditions and provisions of this bond, or in accordance with any private contract between the sureties executing this bond on behalf of said Principal, it being the purpose and intent of this contract that the obligee named in this bond, or such other person having a claim under the provisions of this bond, may enforce any right that it or they may have growing out of this bond by notice, demand, negotiation, suit, or other appropriate action against the controlling surety only, and such action shall be deemed to be binding upon all the sureties named herein; Provided however, the foregoing notwithstanding, the obligee, or such other person having a claim under this bond, at its or their option, may take such action against any or all of said surety companies.

It is agreed by the parties hereto that in the event the Department of Transportation in making the contract with the Principal herein shall be acting as Agent for the United States Government, or for the County of:

CHATHAM

or for both, as well as for itself, then the said Department of Transportation shall have the right in the event of a breach of the contract resulting in loss to the said County or to the United States Government; or to itself, to maintain a suit hereon for the use of itself, or the United States Government, or said County as well as for itself; or said County and said United States Government shall have the right in their own names to maintain a suit herein in the same manner and to the same extent as the Department of Transportation has by virtue of Sections 36-82-104 and 36-82-105 of the Official Code of Georgia Annotated.

IN WITNESS WHEREOF, the said "Principal" and the said "Surety" have duly executed this bond under seal this the _____day of _____, _____.

Signed, Sealed, and Delivered in the presence of us.

Witnesses for Contractor (1)

(1) _____ ARCHER WESTERN CONTRACTORS, LTD. (Seal)

Signature of Witness

_____ _____ (Seal)

Printed Name of Witness Signature of Contractor

(2) _____ _____ (Seal)

Signature of Witness Printed Name of Signee

_____

Printed Name of Witness

Witnesses for Contractor (2)

(1) _____ _____ (Seal)

Signature of Witness

_____ _____ (Seal)

Printed Name of Witness Signature of Contractor

(2) _____ _____ (Seal)

Signature of Witness Printed Name of Signee

_____

Printed Name of Witness

Witnesses for Surety Co. A

_____ (Seal)

(1) _____

Signature of Witness

_____ (Seal)

Signature of Attorney-In-Fact & Georgia Resident Agent

_____

Printed Name of Witness

_____ (Seal)

Printed Name of Attorney-In-Fact & Georgia Resident Agent

(2) _____

Signature of Witness

_____

Printed Name of Witness

Witnesses for Surety Co. B

_____ (Seal)

(1) _____

Signature of Witness

_____ (Seal)

Signature of Attorney-In-Fact & Georgia Resident Agent

_____

Printed Name of Witness

_____ (Seal)

Printed Name of Attorney-In-Fact & Georgia Resident Agent

(2) _____

Signature of Witness

_____

Printed Name of Witness

Witnesses for Surety Co. C

_____ (Seal)

(1) _____

Signature of Witness

_____

Printed Name of Witness

(2) _____

Signature of Witness

_____

Printed Name of Witness

_____ (Seal)

Signature of Attorney-In-Fact & Georgia Resident Agent

_____ (Seal)

Printed Name of Attorney-In-Fact & Georgia Resident Agent

Witnesses for Surety Co. D

_____ (Seal)

(1) _____

Signature of Witness

_____

Printed Name of Witness

(2) _____

Signature of Witness

_____

Printed Name of Witness

_____ (Seal)

Signature of Attorney-In-Fact & Georgia Resident Agent

_____ (Seal)

Printed Name of Attorney-In-Fact & Georgia Resident Agent

COUNTERSIGNED

If this Bond is made by an Out of State Agent, It Must be Countersigned by a Georgia Agent.

By:_____(Seal)
Attorney-In-Fact & Georgia Resident Agent

_____ (Seal)

Signature of Attorney-In-Fact & Georgia Resident Agent

_____ (Seal)

Printed Name of Attorney-In-Fact & Georgia Resident Agent

INSTRUCTIONS:

This Bond is so drawn that it may be executed by a single surety or a multiple surety. In the event of multiple sureties they should be listed in the space provided for Surety “A”, “B”, “C” and “D”. In the event of a single surety, set out this surety as Surety “A” together with the name and address of the Resident Agent.

GEORGIA SECURITY AND IMMIGRATION COMPLIANCE ACT AFFIDAVIT

Contractor(s) Name: _____

Letting: _____

Call No: _____

By executing this affidavit, the undersigned person or entity verifies its compliance with O.C.G.A. § 13-10-91, stating affirmatively that the individual, firm, or corporation which is contracting with the Georgia Department of Transportation has registered with, is authorized to participate in, and is participating in the federal work authorization program commonly known as E-Verify,* in accordance with the applicable provisions and deadlines established in O.C.G.A. § 13-10-91.

The undersigned person or entity further agrees that it will continue to use the federal work authorization program throughout the contract period, and it will contract for the physical performance of services in satisfaction of such contract only with subcontractors who present an affidavit to the undersigned with the information required by O.C.GA. § 13-10-91(b).

The undersigned person or entity further agrees to maintain records of such compliance and provide a copy of each such verification to the Georgia Department of Transportation at the time the subcontractor(s) is retained to perform such service.

_____ _____

EEV / E-Verify™ User Identification Number Date of Authorization

_____ _____

BY: Authorized Officer or Agent Date
(Name of Person or Entity)

_____

Title of Authorized Officer or Agent

_____

Printed Name of Authorized Officer or Agent

SUBSCRIBED AND SWORN
BEFORE ME ON THIS THE

_____ DAY OF _____, 201_

_____ [NOTARY SEAL]

Notary Public

My Commission Expires: _____

*** or any subsequent replacement** operated by the United States Department of Homeland Security or any equivalent federal work authorization program operated by the United States Department of Homeland Security to verify information of newly hired employees, pursuant to the Immigration Reform and Control Act of 1986 (IRCA), P.L. 99-603

Revised 8/22/11

NOTICE

As per the mutual agreement reached between the Federal Highway Administration, The Georgia Department of Revenue and the Georgia Department of Transportation, we have now incorporated the Nonresident Contractor's Tax Bond (10 Percent) into our Contract Bond for Nonresident Contractors.

Also the Contract Bond for Resident Contractors has been revised to Include the same aggregate penal sum as for Nonresidential Contractors.

The Contractor is responsible for signing the appropriate Contract Bonds, either Georgia Residential Contractor or Nonresidential Contractor. The other bond is to be left blank in the document.