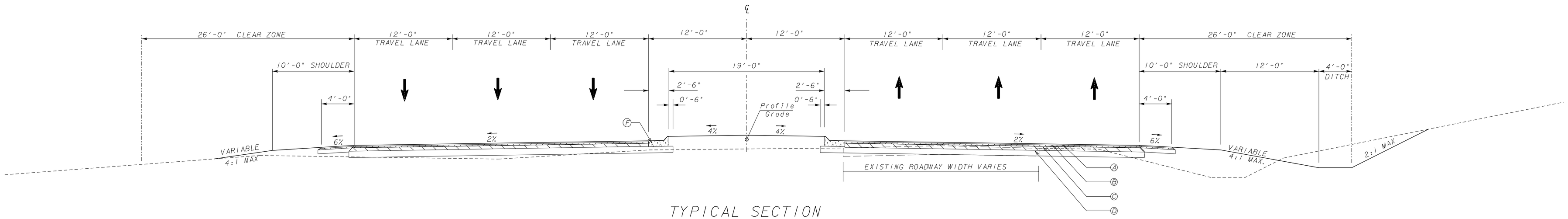

TYPICAL SECTION

(FROM MALONE ROAD TO BILL CARRUTH PARKWAY)

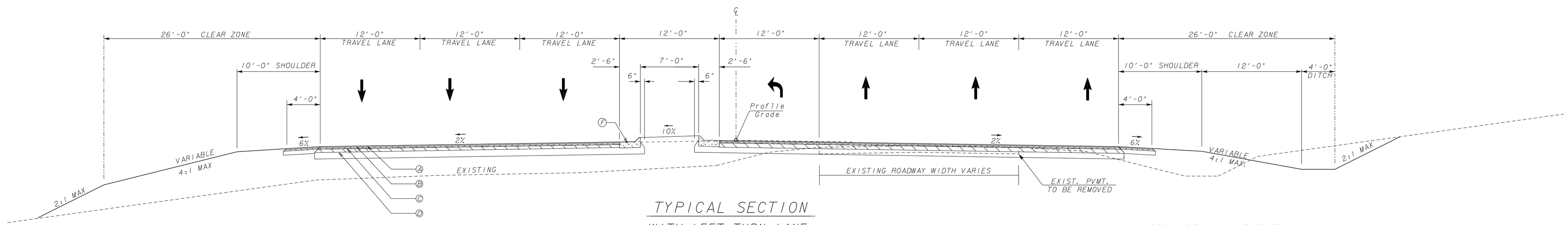

TYPICAL SECTION

WITH LEFT TURN LANE

(AS REQUIRED)

REQUIRED PAVEMENT

- Ⓐ ASPHALTIC CONCRETE 12.5mm SUPERPAVE, 1½"
- Ⓑ ASPHALTIC CONCRETE 19mm SUPERPAVE, 2"
- Ⓒ ASPHALTIC CONCRETE 25mm SUPERPAVE, 4"
- Ⓓ GRADED AGGREGATE BASE, 10"
- Ⓕ 8"X30" CONC. CURB & GUTTER, GA. STD. 9032 B. TYPE 7

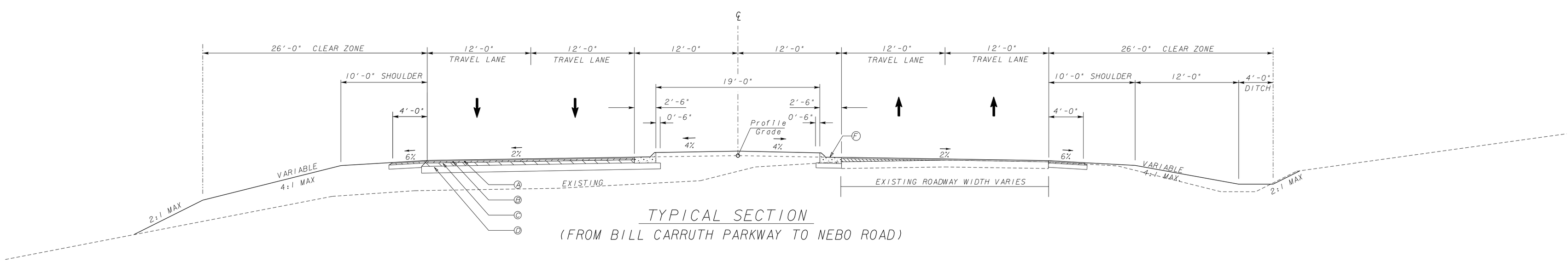

TYPICAL SECTION

(FROM BILL CARRUTH PARKWAY TO NEBO ROAD)

Day Wilburn Associates, Inc.

NOT TO SCALE

REVISION DATES		

STATE OF GEORGIA
DEPARTMENT OF TRANSPORTATION

MAY 30, 2006

TYPICAL SECTIONS

PAULDING COUNTY

SR 92 WIDENING

DRAWING No. 5-01